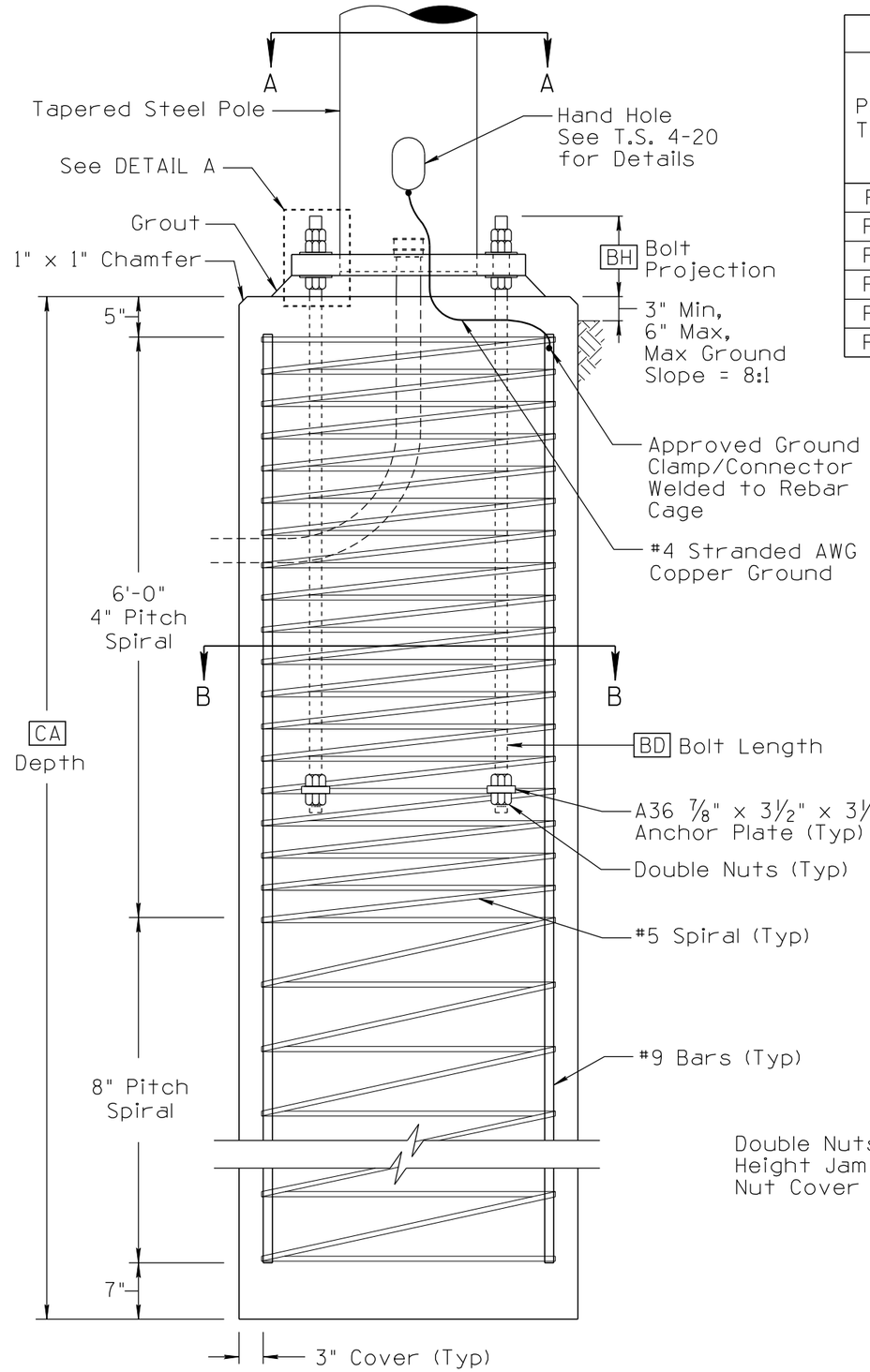

FOUNDATION
(PS1 Shown)

PERMANENT STRAIN POLE VARIABLES														
POLE TYPE	POLE		BASE CONNECTION									FOUNDATION		
	AA Dia (in.)	AB Thk (in.)	No. of Bolts	BA Base Plate Dia (in.)	BB Bolt Circle (in.)	BC Bolt Dia (in.)	BD Bolt Length (in.)	BE Weld (in.)	BF Weld (in.)	BG Base Plate Thickness (in.)	BH Projection Length (In.)	CA Depth (ft.)	CB Dia (ft.)	CC No. of Bars
PS1	17	0.3125	12	29	23	1.5	72	1/2	1/4	2.625	10	19	3.5	14 #9
PS2	19	0.3125	12	31	25	1.5	72	9/16	1/4	2.625	10	20	3.5	14 #9
PS3	21	0.3125	14	33	27	1.5	72	9/16	1/4	2.625	10	20	4	18 #9
PS4	23	0.3125	16	35	29	1.5	72	9/16	1/4	2.75	10	22	4	18 #9
PS5	25	0.3125	12	39	32	1.75	72	9/16	1/4	2.875	11.5	22	4.5	22 #9
PS6	27	0.375	14	41	34	1.75	72	5/8	5/16	3	11.5	24	4.5	22 #9

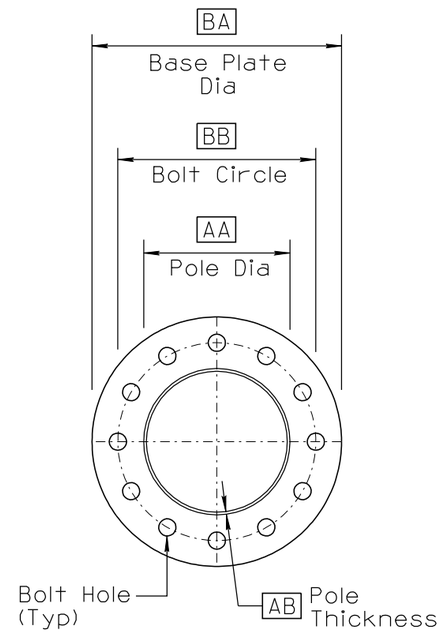

SECTION A-A
(PS1 Shown)

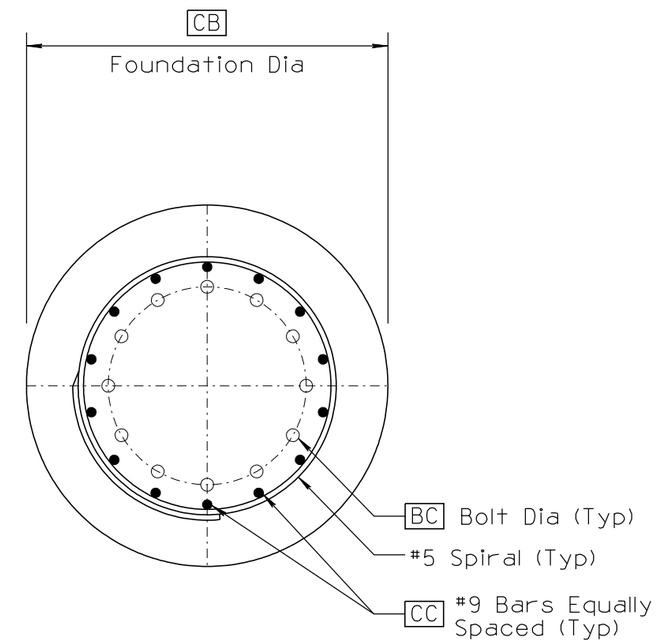

SECTION B-B
(PS1 Shown)

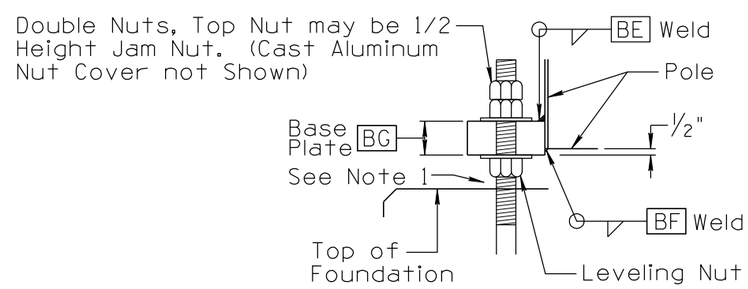

DETAIL A

ANCHOR BOLT NOTE:

1. Maximum distance between top of foundation and bottom of leveling nut = one anchor bolt diameter.

NOT TO SCALE

DESIGN APPROVED **SIGNATURE**	ARIZONA DEPARTMENT OF TRANSPORTATION INTERMODAL TRANSPORTATION DIVISION TRAFFIC SIGNALS AND LIGHTING STANDARD DRAWINGS	REVISION 01/12
APPROVED FOR DISTRIBUTION **ON FILE**	SPAN WIRE SIGNALS AND LIGHTING STEEL POLE FOUNDATION DETAILS	DRAWING NO. T.S. 15-1
		SHEET NO. 2 OF 6

NO	DESCRIPTION OF REVISIONS	MADE BY	DATE
1	2012 ORIGINAL ISSUE - NEW DRAWING	C. COLE	01/12
2			
3			
4			