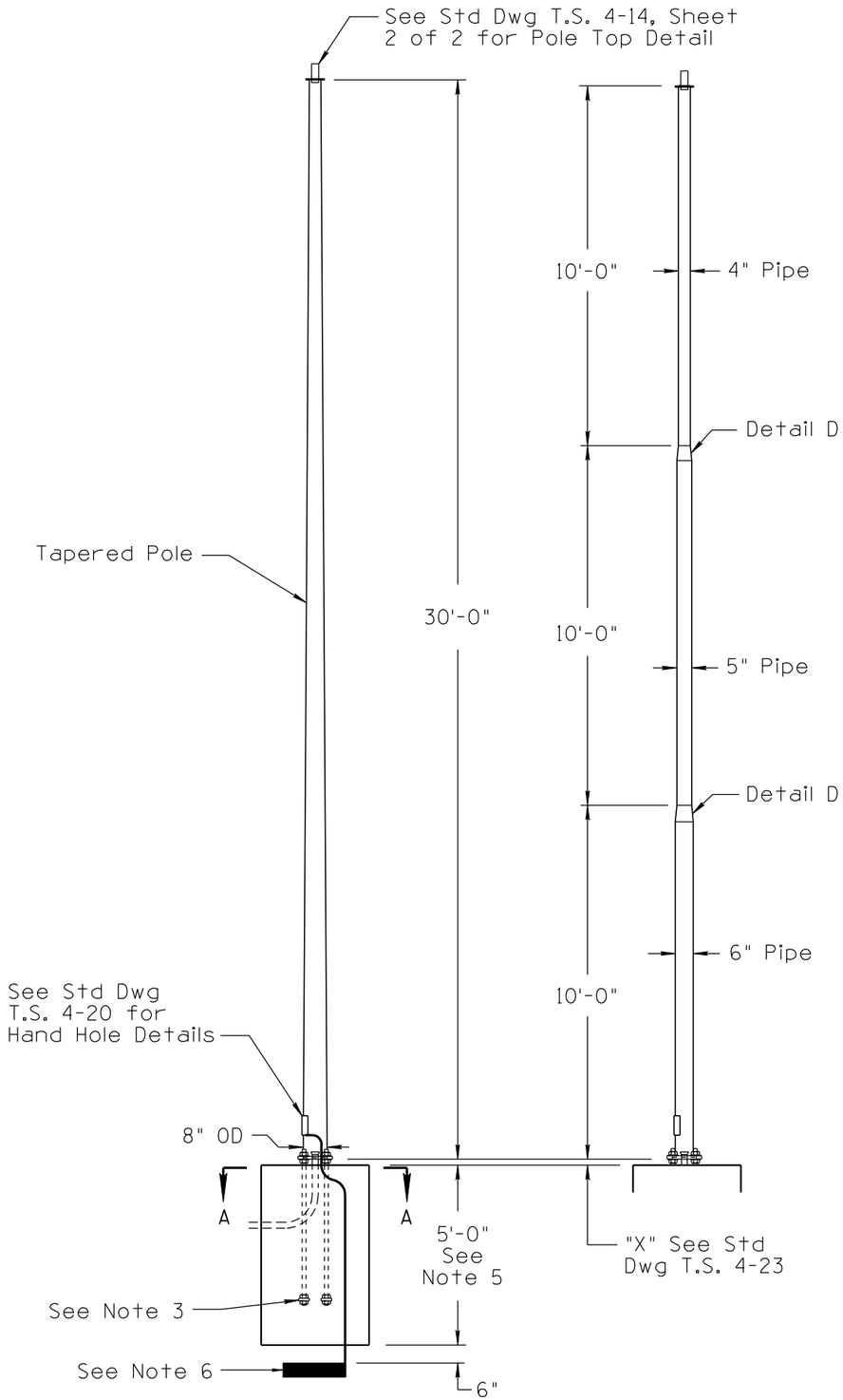

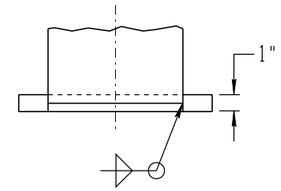

SECTION B-B

(Bolt Slots Not Shown)

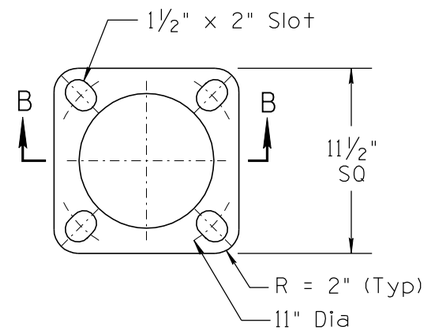

BASE PLATE DETAIL

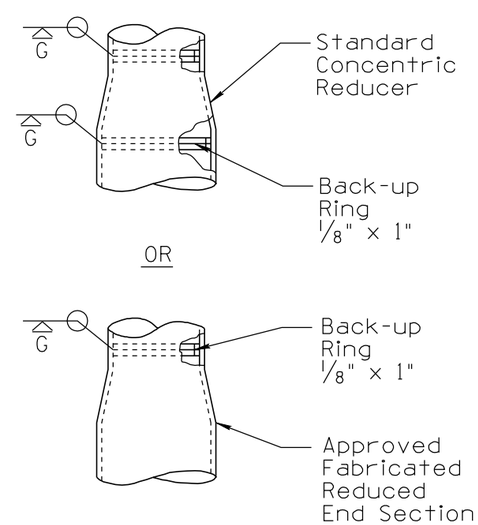

DETAIL D

NOTES:

1. All materials and construction shall conform to the requirements of the Standard Specifications.
2. Pole shall comply with 1994 AASHTO loading requirements in the Standard Specifications for Structural Supports for Highway Signs, Luminaires, and Traffic Signals.
3. See Std Dwg T.S. 4-23 for anchor bolt details.
4. The foundation hole shall be augered and Class "S" (3000 psi) concrete, poured against undisturbed compacted earth.
5. Unstable soil and/or a steep slope may require a deeper foundation. See Standard Specifications.
6. A 25 ft coil of #4 AWG bare copper conductor or a 14 inch square copper ground plate shall be installed before the concrete is poured and connected to pole grounding lug in the hand hole. The ground or coil shall be covered with 6 inches of fill.
7. Pole may have a continuous taper or step taper.
8. Once the pole installation is completed the open space between the base plate and foundation shall be grouted.
9. If pole foundation is within or adjacent to sidewalk, top of pole foundation shall be flush with the abutting or adjacent sidewalk.
10. All dimensions are nominal.

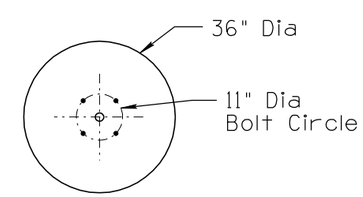

SECTION A-A

PLAN SYMBOL

NOT TO SCALE

DESIGN APPROVED	ARIZONA DEPARTMENT OF TRANSPORTATION INTERMODAL TRANSPORTATION DIVISION TRAFFIC SIGNALS AND LIGHTING STANDARD DRAWINGS	REVISION 10/13
SIGNATURE		DRAWING NO. T.S. 4-12
APPROVED FOR DISTRIBUTION ON FILE	TYPE "S" POLE	SHEET NO. 1 OF 1

NO	DATE	DESCRIPTION OF REVISIONS	MADE BY	DATE
1	2010 EDITION		C. COLE	03/10
2	REVISED NOTES AND DETAIL CALLOUTS.		L. LOPEZ	10/13