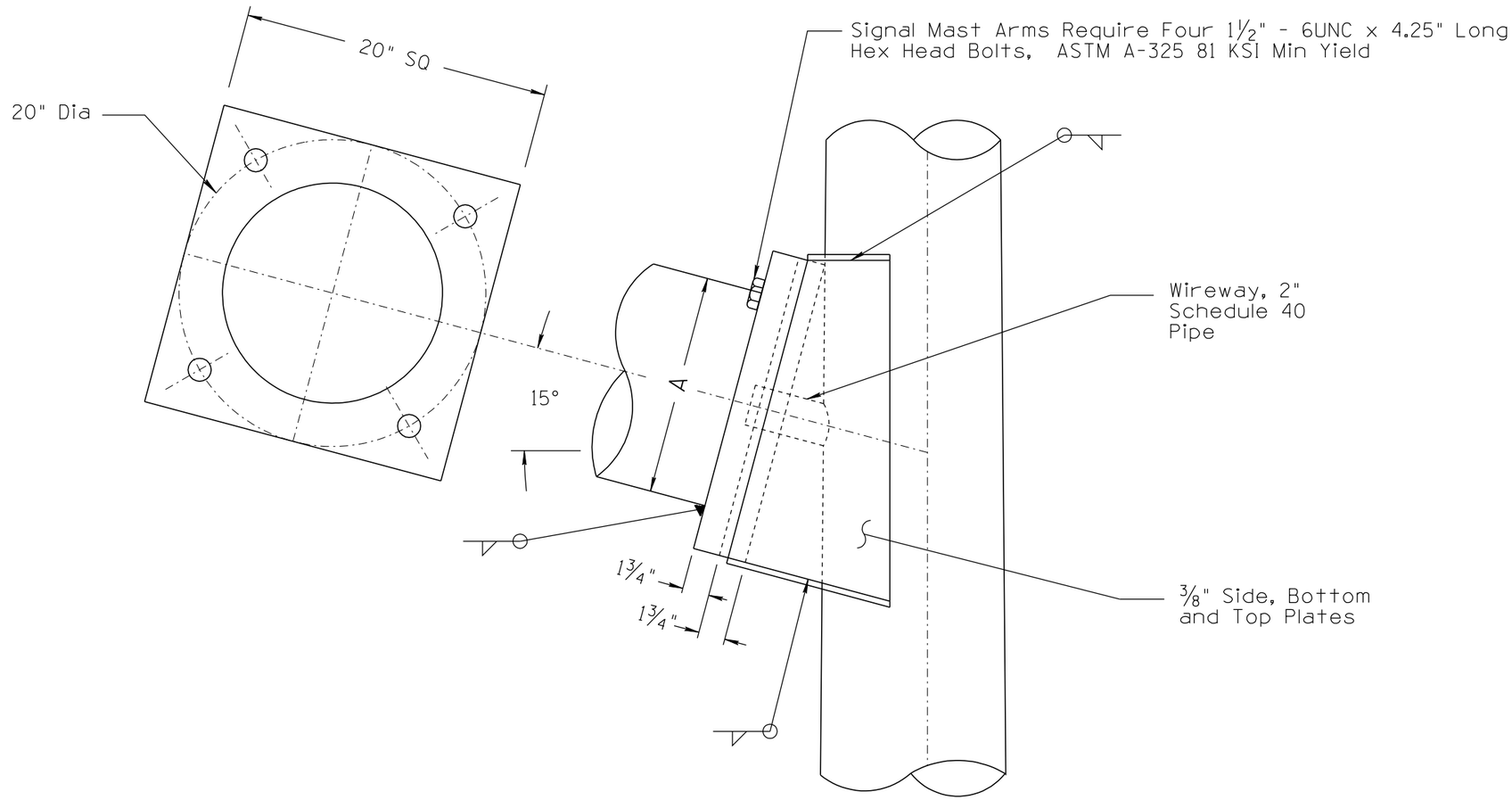

MAST ARM CONNECTION DETAIL

MAST ARM INFORMATION		
Nom MA Length	60'	65'
A	12⅛"	13"

NOT TO SCALE

DESIGN APPROVED **SIGNATURE**	ARIZONA DEPARTMENT OF TRANSPORTATION INTERMODAL TRANSPORTATION DIVISION TRAFFIC SIGNALS AND LIGHTING STANDARD DRAWINGS	REVISION 03/10
APPROVED FOR DISTRIBUTION **ON FILE**	MAST ARM CONNECTION DETAIL TYPE "V" AND "W" POLES	DRAWING NO. T.S. 4-30 SHEET NO. 1 OF 1

NO	DESCRIPTION OF REVISIONS	MADE BY	DATE
1	2010 EDITION		
2			
3		C. COLE	03/10
4			