Draft
ODPC - 5/28/2019
Not yet approved or proposed

NOTICE OF PROPOSED RULEMAKING

TITLE 17. TRANSPORTATION

CHAPTER 6. DEPARTMENT OF TRANSPORTATION

OVERSIZE AND OVERWEIGHT SPECIAL PERMITS

PREAMBLE

1. Articles, Parts, or Sections Affected (as applicable)	**Rulemaking Action**
R17-6-101	Amend
R17-6-102	Amend
Table 1	Amend
R17-6-103	Amend
R17-6-104	Amend
R17-6-105	Amend
R17-6-106	Amend
R17-6-107	Amend
R17-6-108	Amend
R17-6-109	Amend
R17-6-110	Amend
R17-6-111	Amend
R17-6-112	Amend
R17-6-113	Amend
R17-6-201	Amend
R17-6-202	Repeal
R17-6-203	Amend
R17-6-204	Amend
R17-6-205	Amend
R17-6-206	Amend
Table 2	Amend
R17-6-207	New Section
R17-6-208	Repeal
R17-6-209	Amend
R17-6-210	Renumber *(to R17-6-502 and Receive R17-6-413)*
R17-6-210	Amend
Table 5	Renumber *(Receiving R17-6-413, Table 5)*
Table 5	Amend
R17-6-211	Repeal
R17-6-212	Amend
Table 6	Repeal

Table 7	Amend
R17-6-301	Amend
R17-6-302	Amend
Ill. 1	Amend
R17-6-303	Amend
Ill. 2	Amend
R17-6-304	Amend
Ill. 4	Amend
R17-6-305	Amend
R17-6-306	Amend
R17-6-307	Amend
R17-6-308	Amend
R17-6-401	Amend
R17-6-402	Repeal
R17-6-402	Renumber *(Receiving R17-6-408)*
R17-6-402	Amend
R17-6-403	Renumber *(to R17-6-405 and Receive R17-6-405)*
R17-6-403	Amend
R17-6-404	Amend
R17-6-405	Renumber *(to R17-6-403 and Receive R17-6-403)*
R17-6-405	Amend
R17-6-406	Repeal
R17-6-407	Amend
R17-6-408	Renumber *(Going to R17-6-402)*
R17-6-409	Repeal
R17-6-409	Renumber *(Receiving R17-6-414)*
R17-6-409	Amend
R17-6-410	Amend
R17-6-411	Amend
Ill. 3	New Section
Table 3.01	Amend
Table 3.02	Amend
Table 3.03	Amend
Table 3.04	Amend
Table 3.05	Amend
Table 3.06	Amend
Table 3.07	Amend
Table 3.08	Amend

Table 3.09	Amend
Ill. 3	Repeal
R17-6-412	Amend
Table 4	Amend
R17-6-413	Renumber *(Going to R17-6-210)*
Table 5	Renumber *(Going to R17-6-210, Table 5)*
R17-6-414	Renumber *(Going to R17-6-409)*
R17-6-501	Renumber *(Going to R17-6-507)*
R17-6-501	New Section
R17-6-502	Renumber *(to R17-6-508 and Receive R17-6-210)*
R17-6-502	Amend
R17-6-503	Renumber *(Going to R17-6-509)*
R17-6-503	New Section
R17-6-504	Renumber *(Going to R17-6-510)*
R17-6-505	Renumber *(Going to R17-6-511)*
R17-6-506	Amend
R17-6-507	Renumber *(Receiving R17-6-501)*
R17-6-507	Amend
R17-6-508	Renumber *(Receiving R17-6-502)*
R17-6-508	Amend
R17-6-509	Renumber *(Receiving R17-6-503)*
R17-6-509	Amend
R17-6-510	Renumber *(Receiving R17-6-504)*
R17-6-510	Amend
R17-6-511	Renumber *(Receiving R17-6-505)*
R17-6-511	Amend

2. Citations to the agency's statutory rulemaking authority to include the authorizing statute (general) and the implementing statute (specific):

Authorizing statutes: A.R.S. §§ 28-366, 28-1103, 28-1104, 28-1105, 28-1111, 28-5204, 28-7045 and 42-19157, 23 U.S.C. § 127, and 49 U.S.C. §§ 31111, 31112, 31113, and 31114.

Implementing statutes: A.R.S. Title 28, Chapter 3, Articles 18 and 19, 23 CFR 658, and Laws 2016, Ch. 128, § 91.

3. Citations to all related notices published in the *Register* as specified in R1-1-409(A) that pertain to the record of the proposed rules:

Notice of Rulemaking Docket Opening: 25 A.A.R. 680, March 15, 2019

4. The agency's contact person who can answer questions about the rulemaking:

Name: John Lindley, Senior Rules Analyst
Address: Arizona Department of Transportation
Administrative Rules and Policy Development
206 S. 17th Ave., Mail Drop 180A
Phoenix, AZ 85007
Telephone: (602) 712-8804
E-mail: jlindley@azdot.gov
Web site: Please visit the ADOT web site to track the progress of this rule and any other agency rulemaking matters at http://www.azdot.gov/about/GovernmentRelations.

5. An agency's justification and reason why a rule should be made, amended, repealed or renumbered, to include an explanation about the rulemaking:

The Arizona Department of Transportation (ADOT) and Overdimensional Permit Council have developed these proposed rules in coordination with a broad coalition of public and private transportation stakeholder groups including the Department of Public Safety (DPS), local law enforcement personnel, Arizona's business community, the Arizona Trucking Association, the Specialized Carriers & Rigging Association and other members of Arizona's trucking, heavy-haul transport, crane, utility, and escort vehicle industries. The proposed rules amend existing oversize and overweight envelope and special permit rules and contain reasonable permit requirements, restrictions, and allowances for transporting oversize and overweight vehicles and loads on the State Highway System.

On implementation of final rulemaking, located at 19 A.A.R. 2486, August 16, 2013, effective September 7, 2013, the Department was contacted by several members of the Specialized Carriers & Rigging Association, who reported that the continuous travel allowance previously provided under R17-6-408(B) for the movement of self-propelled mobile cranes, drilling rigs, and similar specialty equipment was changed from a 10' front or rear overhang allowance to a 3' front and 10' rear overhang allowance. In changing the language of the rule, the Department intended to expand the continuous travel allowance for all vehicles by allowing overhang of up to 13' (previously only 10') as long as 10' of the overhang projected to the rear of the vehicle. However, by changing that language the Department inadvertently eliminated a variable overhang length consideration routinely used by the industry to justify eligibility for continuous travel previously relied on for movement of specialty equipment specifically manufactured for travel with more than 3' of front overhang (i.e., bucket trucks, ladder trucks, utility trucks, etc.). This rulemaking provides a new continuous travel allowance made specifically applicable to the movement of self-propelled mobile cranes, drilling rigs, and similar specialty equipment with no more than 20' of overhang (10' to the front and 10' to the rear) while transporting under a class A - Crane oversize or overweight envelope or special permit.

Representatives of the heavy-haul and oversize and overweight transport industries requested that the Department further clarify the rules by making minor technical corrections that may provide additional

regulatory relief for the industry and ensure that the rules are clear, concise, and understandable. Rule amendments, technical corrections, and clarifying changes considered by the Department since publication of the final rules on oversize and overweight special permits on August 16, 2013, include:

a. Adding a special continuous travel allowance to accommodate self-propelled mobile cranes, drilling rigs, and similar specialty equipment traveling under a class A - Crane special permit at no more than 11' in width, 14' 6" in height, 10' in length of front overhang, and 10' in length of rear overhang;

b. Removing an outdated address from the definition of "Arizona Central Commercial Permits Office";

c. Providing clearer references to the thresholds at which a vehicle or a self-propelled mobile crane, drilling rig, or similar specialty equipment becomes subject to the metropolitan curfew transport allowance and restrictions provided under R17-6-404;

d. Adding a class A annual permit option and a 30-day permit option (provided by Laws 2014, Ch. 60), to accommodate industry requests for expansion of the more desirable class A special permit in-lieu of having to purchase a class B - Oversize Combination, class B - Type R - Oversize Recreational Vehicle, class D - Crane, class G - Overwidth Vehicle or Combination, or class H - Overwidth Watercraft special permit when all dimensions of the vehicle or vehicle and load combination fall within the existing class A maximum limits provided under R17-6-201;

e. Eliminating the class B - Oversize Combination, class B - Type R - Oversize Recreational Vehicle, class D - Crane, class G - Overwidth Vehicle or Combination, and class H - Overwidth Watercraft special permits, since the class A special permits can now accommodate all dimensions and permit options previously only available under the separate permit classes;

f. Updating R17-6-102, Table 1, Threshold Dimensions, to reflect the higher legal thresholds provided under Laws 2016, Ch. 52 (HB2251), and the federal ''Fixing America's Surface Transportation Act'' or "FAST Act";

g. Clarifying R17-6-103 and R17-6-204, for delinquent tax reporting purposes under A.R.S. § 42-19157, by prescribing the method and procedure used by the Department to verify eligibility for movement of a mobile home subject to payment of ad valorem taxes, including clarification on what the Department may accept as evidence of ad valorem tax payment or clearance;

h. Providing clarification under R17-6-207 that the owner, operator, or driver of an emergency vehicle or emergency response vehicle not subject to the size, weight, and load provisions of A.R.S. Title 28, Chapter 3, Article 18, as prescribed under A.R.S. § 28-1091, is subject to all weight restrictions placed by the Department on structurally deficient bridges as indicated under R17-6-412, Table 4, or by appropriate highway signage. Access to any bridge with insufficient capacity to handle the heavier weights of an emergency vehicle or emergency response vehicle must first be coordinated through Class C Statewide Permit Services;

i. Repealing R17-6-212, Table 6, since a vehicle, combination of vehicles, or vehicle and load combination using at least one tridem axle group configuration to distribute heavier weights over a

larger area may now travel on all routes of the State Highway System, unless otherwise restricted under R17-6-412, Table 4;

j. Amending R17-6-212, Table 7, to provide axle group weight calculations that an envelope or special permit applicant may use to achieve higher, but reduced, tridem axle group weights for equipment that cannot be configured to meet the minimum distance requirement of nine feet between the center of the first axle and the center of the third axle of each tridem axle group. R17-6-212, Table 7, will provide reduced weight calculations applicable for minimum distances between 8' and 8' 11";

k. Consolidating the gross weight categories permitted for reducible vehicle and load combinations transporting under a class E special permit in conformance with legislative changes provided in Laws 2014, Ch. 60 (HB2430);

l. Clarifying that the class E special permit currently issued by the Department under A.R.S. 28-1103(A), for operating a long single-trailer combination with a reducible load on Interstate 15, may also be issued to include other highways under the jurisdiction of the Department as listed under R17-6-206, Table 2;

m. Repealing the Western Regional Trip Permit previously made available under R17-6-211, since issuance of the permit was discontinued as provided under the Western Association of State Highway and Transportation Officials (WASHTO) resolution 03-18, effective December 31, 2018;

n. Providing illustrations of the warning flag configurations and safety lighting device requirements for vehicles or loads extending more than four feet beyond the front of a vehicle;

o. Adding a reference to the general highway operations requirements under R17-6-401 to remind permittees and drivers issued a multiple trip oversize or overweight envelope or special permit to access and review the most current information on highway-specific restrictions, requirements, conditions, and allowances indicated on the Department's web site prior to commencing transport, as currently required under R17-6-412;

p. Clarifying that the general term "houseboat," as used under A.R.S. § 28-1144(B), and R17-6-506, encompasses all large non-specific and non-reducible watercraft models transported by an envelope permit holder, including a yacht;

q. Correcting the weight tables used for maximizing the amount of weight allowed when using wider tires on axle group configurations with two or more axles;

r. Updating R17-6-412, Table 4, to reflect the most recent bridge height and weight restriction information as posted in real time on the Department's web site; to remove some under-legal width restrictions no longer necessary on certain routes; and to expand the number of routes that can now accommodate oversize and overweight vehicles, combinations of vehicles, or vehicle and load combinations using tridem axle group configurations;

s. Removing all curfew routes and restrictions from the Yuma metropolitan area; and

t. Updating the statutory reference in the definition of "mobile home" to reflect changes made by Laws 2016, Ch. 128, §§ 19 through 21 (SB1530), which renumbered A.R.S. § 41-2142 as A.R.S. § 41-4001.

Additionally, this rulemaking will allow the Department to lift size or weight restrictions on certain routes for vehicle and load combinations operating in support of projects aimed at protecting watersheds from the negative environmental and economic impacts of flood damage, maintaining the health and vitality of at-risk timber forests, supporting the economic development of communities, and preventing loss of life and significant property or infrastructure damage as a result of catastrophic forest fires. State and federal hazardous fuel reduction projects are currently being conducted under Arizona's Four Forest Restoration Initiative, which is a collaborative effort to restore forest ecosystems on portions of four National Forests - Coconino, Kaibab, Apache-Sitgreaves, and Tonto - along the Mogollon Rim in northern Arizona and to reduce any constant threats to forest and rangeland health throughout rural Arizona.

6. A reference to any study relevant to the rules that the agency reviewed and proposes either to rely on or not to rely on in its evaluation of or justification for the rules, where the public may obtain or review each study, all data underlying each study, and any analysis of each study and other supporting material:

The agency did not review or rely on any study relevant to the rules.

7. A showing of good cause why the rulemaking is necessary to promote a statewide interest if the rulemaking will diminish a previous grant of authority of a political subdivision of this state:

This rulemaking does not diminish a previous grant of authority of a political subdivision of this state. However, the rulemaking is necessary to correct the Department's inadvertent removal of the variable overhang consideration currently used by the Salt River Project when dispatching oversize bucket trucks and other large utility repair vehicles or loads needed for the rapid restoration of utility services after an outage.

Clarification is being provided under R17-6-207 for the owners, operators, and drivers of emergency vehicles or emergency response vehicles not subject to the size, weight, and load provisions of A.R.S. Title 28, Chapter 3, Article 18, as prescribed under A.R.S. § 28-1091. These vehicles remain subject to all weight restrictions placed by the Department on structurally deficient bridges as indicated under R17-6-412, Table 4, or by appropriate highway signage. Access to any bridge with insufficient capacity to handle the heavier weight configurations of an emergency vehicle or emergency response vehicle must first be coordinated through Class C Statewide Permit Services.

Additionally, as provided under Laws 2015, Ch. 244, the Arizona Department of Agriculture's Division of Weights and Measures has now assumed all authority, powers, duties and responsibilities of the former Arizona Department of Weights and Measures. This rulemaking updates the weighmaster services reference to reflect those services now provided through the Arizona Department of Agriculture's Weights and Measures Division. Since the legislation specifically provided that all certificates, licenses, registrations, permits and other indicia of qualification and authority previously issued by the Department of Weights and Measures remain valid for the duration of their terms of validity, any weighmaster service

impacts experienced during this change of agency would have occurred as a direct result of the legislative changes and not as a result of this rulemaking.

8. The preliminary summary of the economic, small business, and consumer impact:

As a multi-modal transportation agency, the Arizona Department of Transportation is primarily responsible for planning, building, operating and maintaining a complex highway system. The Department also provides for the safe and efficient movement of people, goods, and services throughout the state, while promoting compliance with all applicable state and federal laws and regulations developed to protect and preserve all state and federal highway infrastructure under the jurisdiction of the Department. The Arizona Department of Public Safety assists the Department in performance of those duties, and both agencies endeavor to make Arizona highways safer for all motorists by:

Enforcing the motor carrier safety regulations;

Requiring all trucks of every weight and classification to be configured, maintained, and driven in ways that maximize public safety; and

Ensuring that all commercial motor vehicle owners, operators, and drivers comply with all applicable state and federal commercial motor vehicle safety regulations, weight laws, and driver qualification standards.

This rulemaking details eligibility, application, and use requirements for a variety of permits the Department currently issues to commercial motor carriers for the operation of commercial motor vehicles, combinations of vehicles, or vehicle and load combinations exceeding the maximum size or weight limitations provided by statute. The statutes additionally provide authority for issuance, conditions, restrictions, approvals, and fees.

Further, this rulemaking aligns the Department's definition of a "non-reducible vehicle or load" with the federal definition of "non-divisible load or vehicle" and modifies the Department's issuance criteria for class A special permits to accommodate all vehicles, or vehicle and load combinations, previously only eligible for a class B, class B-Type R, class D, or class G special permit. The Department has determined that the broader class A special permits, which are the least restrictive permits most desired by industry representatives, will sufficiently encompass all specific non-reducible vehicles, combinations of vehicles, or vehicle and load combinations with dimensions that do not exceed the limitations provided under R17-6-201, or the maximum permitted weight computations provided under R17-6-411.

The amendments made in this rulemaking modify the parameters of the Department's existing class A special permit to more closely follow the general permit requirement provided under A.R.S. § 41-1037. The Department will eliminate the existing class B, class B-Type R, class D, and class G special permits to reduce the number of permit classes, categories, and types of special permits an applicant needs to consider each time the applicant applies for permission to transport a vehicle or vehicle and load combination using the State Highway System. Although, all unexpired permits will continue to be valid until expiration.

In this rulemaking, the Department identifies the following entities that may bear costs and receive benefits ranging from minimal to substantial:

a. Arizona Department of Transportation;
b. Arizona Department of Public Safety;
c. Arizona Department of Agriculture;
d. Arizona utility providers;
e. Any political subdivision issuing permits for oversize or overweight vehicles, combinations of vehicles, or vehicle and load combinations;
f. Automobile and boat transporter companies based in Arizona;
g. Businesses or consumers with projects requiring the use or movement of an oversize, overweight, or oversize and overweight vehicle, combination of vehicles, or vehicle and load combination on a highway under the jurisdiction of the Department;
h. Freight brokerage firms, heavy-haul companies, and other commercial transporters based in Arizona who seek permits for movement of oversize or overweight vehicles, combinations of vehicles, or vehicle and load combinations;
i. Private certified engineering firms; and
j. Private individuals and consumers.

The Department of Public Safety, local law enforcement personnel, and certain members of Arizona's trucking, heavy-haul transport, crane, utility, and escort vehicle industries, including the Arizona Trucking Association, the Specialized Carriers & Rigging Association, and Arizona's business community may experience minimal costs for re-training any personnel involved with the application, issuance, and use of oversize and overweight envelope or special permits issued by the Department under these rules.

Arizona's motoring public will experience no direct costs as a result of this rulemaking, but may experience the unquantifiable benefits the rules provide in maintaining general highway safety measures and supporting cost abatement in the preservation and integrity of the State Highway System infrastructure.

This rulemaking brings the Department's rules into conformance with all applicable provisions prescribed under the federal ''Fixing America's Surface Transportation Act'' or "FAST Act" signed into law on December 4, 2015, which provided some level of regulatory relief for motor carriers trying to maintain compliance with federal regulations while operating certain types of commercial motor vehicles in interstate commerce. The Department is updating R17-6-102, Table 1, to reflect the new legal thresholds provided under the FAST Act and Laws 2016, Chapter 52, which:

- Increased the allowable length of a stinger-steered automobile or boat transporter from 75 feet to 80 feet and provided that up to four feet of front overhang and six feet of rear overhang on the automobile or boat transporter shall not be included when measuring the overall length of the vehicle and load for legal operation in interstate commerce as provided under 49 United States Code (U.S.C.) § 31111(a) and (b);
- Increased the allowable length of a towaway trailer transporter combination to 82 feet when operated on the Interstate Highway System;

- Clarified that a vehicle carrying fluid milk products is now deemed under 23 U.S.C. § 127(a) to be a load that cannot be easily dismantled or divided, and as such, is a "non-reducible load or vehicle" eligible for special permit issuance under A.R.S. § 28-1103 and these rules;
- Provided an exception from the existing 20,000 pound single axle load limit allowing an over-the-road bus to operate with a single axle load limit of up to 24,000 pounds without a special permit;
- Increased the maximum gross vehicle weight allowance for emergency vehicles traveling on the Interstate Highway System to 86,000 lbs. as provided under 23 U.S.C. § 127(r);
- Provided a definition of "emergency vehicle" as applicable to the increased weight allowances now provided under 23 U.S.C. § 127(r) and R17-6-102, Table 1;
- Clarified the term "emergency response vehicle" as it relates to the "non-reducible load or vehicle" designation provided for oversize and overweight special permit issuance when traveling on the Interstate Highway System, to include vehicles loaded with salt, sand, chemicals or a combination thereof, with or without a plow or blade attached in front, when being used for the purpose of spreading the material on highways that are or may become slick or icy;
- Increased the maximum gross vehicle weight allowance for natural gas vehicles traveling on the Interstate Highway System by an amount equal to the difference between the weight attributable to the vehicle's natural gas tank and fueling system and the weight of a comparable diesel tank and fueling system (up to 82,000 pounds) as provided under 23 U.S.C. § 127(s); and
- Clarified the special permit issuance process for commercial motor carriers using otherwise reducible overweight vehicles or vehicle and load combinations on the Interstate Highway System for delivering supplies and other relief during periods of national emergency.

This rulemaking does not increase any fee currently required on application for an oversize or overweight envelope or special permit. In Calendar Year 2017, the Department generated $7,569,702 by issuance of 116,499 oversize and overweight envelope and special permits for distribution to the Highway User Revenue Fund as prescribed under A.R.S. § 28-6533, and the State Highway Fund as prescribed under A.R.S. § 28-1105(A)(2). The Table below outlines the Department's oversize and overweight permit classifications, revenue collections, and issuance counts for the separate permit classifications.

Permit Classification	**# Permits Issued CY 2017**	**Highway User Revenue Fund**
Class D - Crane, Drill Rig, Splty. Equipment OS/OW (30 Day)	264	$ 19,725
Envelope Houseboat (30 Day)	0	$ 0
Envelope Oversize (30 Day)	27	$ 2,850
Envelope Oversize/Overweight (30 Day)	5	$ 1,000
Class A Oversize (30 Day)	6,321	$ 187,800
Class A Oversize/Overweight (30 Day)	5,474	$ 404,475
Class E - LCV Category B - 80,001 to 123,500 lbs. (30 Day)	2	$ 150
Class E - LCV Category C - 123,501 to 129,000 lbs. (30 Day)	258	$ 18,525

Class E - LCV Category D - I-15 Misc. 129,000 lbs. (30 Day)	675	$ 49,650
Class B Type R - Recreational Vehicle Oversize (30 Day)	1,143	$ 33,990
Class B - Oversize (Excludes Cranes and Drilling) (30 Day)	9	$ 270
Class D - Cranes, Drilling Rigs, Specialty Equipment (Annual)	210	$ 114,025
Envelope - Houseboat Overwidth (Annual)	18	$ 18,000
Envelope - Oversize (Annual)	288	$ 166,350
Envelope - Oversize/Overweight (Annual)	876	$ 865,725
Class E - LCV Category B - 80,001 to 123,500 lbs. (Annual)	18	$ 5,760
Class E - LCV Category C - 123,501 to 129,000 lbs. (Annual)	894	$ 310,320
Class E - LCV Category D - I-15 Misc. 129,000 lbs. (Annual)	474	$ 237,600
Class B Type R - Recreational Vehicle Oversize Only (Annual)	182	$ 64,800
Class B - Oversize (Excludes Cranes and Drilling) (Annual)	56	$ 14,760
Class H - Overwidth Watercraft (Annual)	77	$ 3,195
Class G - Overwidth (30 Day)	1	$ 30
Class G - Overwidth (Annual)	0	$ 0
Class G - Overwidth (Single Trip)	21	$ 315
Class A - Oversize (Single Trip)	28,504	$ 423,885
Class C - Oversize (Single Trip)	1,251	$ 36,550
Class A Oversize/Overweight (Single Trip)	10,360	$ 766,725
Class C Oversize/Overweight (Single Trip)	2,483	$ 262,978
Houseboat (Single Trip)	43	$ 4,300
Class E - LCV Cat. B - 80,001 to 123,500 lbs. (Single Trip)	0	$ 0
Class E - LCV Cat. C - 123,501 to 129,000 lbs. (Single Trip)	27	$ 1,875
Class E - LCV Cat. D - I-15 Misc. 129,000 lbs. (Single Trip)	7	$ 525
Class C - Max Tridem Oversize/Overweight (Single Trip)	969	$ 86,025
Class C EZ - Mobile Home (Single Trip)	2,030	$ 60,645
Class A - Oversize Mobile Home (Single Trip)	8,965	$ 133,905
Class C - Oversize Mobile Home (Single Trip)	179	$ 5,150
Single Trip Western Regional OS/OW	3	$ 223
Highway User Revenue Fund Total:	**72,114**	**$ 4,302,101**
Class C - Overweight Produce 90,800 Border Zone (Single Trip)	44,385	$ 3,267,601
State Highway Fund Total:	**44,385**	**$ 3,267,601**

The Department has determined that the benefits of these rules far outweigh the costs of the rules and anticipates that all affected businesses will experience an unquantifiable, but welcome, financial benefit as a result of the Department's ability to issue special permits authorizing increased weight allowances on

more routes for vehicles, or vehicle and load combinations, equipped with at least one tridem axle group configuration.

Additionally, this rulemaking supports appropriately scaled, sustainable, forest product industries currently working throughout the state to safeguard the health, safety, and welfare of visitors to the National Forests and any residents of the surrounding communities by reducing unnecessary fuel loads for the elimination of, or a significant reduction in, any future possibility of fueling devastating forest fires. These industries strengthen local economies while conserving natural resources and the aesthetic values across the state.

This rulemaking allows the Department to provide the sustainable forest product industry with a more cost-effective way to move or remove natural forest products or biomass in direct support of the Department's ongoing cooperative efforts with the U.S. Forest Service, the Arizona Department of Forestry and Fire Management, county officials, and Arizona cities and towns. These ongoing efforts help to mitigate the effects of wildfires, correct damages, and provide other improvements necessary for the successful management of forest health by making it easier for these businesses to engage in activities designed to:

Increase forest resiliency and sustainability;
Reduce risk of undesirable fire effects;
Improve terrestrial and aquatic species habitats;
Improve conditions and functionality of streams and springs;
Restore woody riparian vegetation; and
Preserve cultural resources.

All of these businesses play a key role in achieving the goals of Arizona's Four Forest Restoration Initiative by harvesting, processing, and selling wood products, thereby reducing treatment costs and providing additional economic opportunities.

9. The agency's contact person who can answer questions about the economic, small business, and consumer impact statement:

Written comments regarding this rulemaking or the accuracy of the Department's economic, small business, and consumer impact statement should be directed to the person listed under item 4. All comments must be received by close of public record at 5:00 p.m. on [to be determined].

10. The time, place, and nature of the proceedings to make, amend, repeal, or renumber the rules, or if no proceeding is scheduled, where, when, and how persons may request an oral proceeding on the proposed rules:

The Department has scheduled the following oral proceeding for public comments:

Date:	[To be determined]
Time:	1:30 p.m.
Location:	Arizona Department of Transportation Auditorium 206 S 17th Ave., Rm. 107 Phoenix, AZ 85007
Nature:	Oral Proceeding/Public Hearing

Pursuant to Title VI of the Civil Rights Act of 1964, and the Americans with Disabilities Act (ADA), ADOT does not discriminate on the basis of race, color, national origin, age, gender, disability or limited English proficiency. Persons that require a reasonable accommodation based on language or disability should contact ADOT Civil Rights at (602) 712-8946 or civilrightsoffice@azdot.gov. Requests should be made as early as possible to ensure the state has an opportunity to address the accommodation.

Personas que requieren asistencia o una adaptación razonable por habilidad limitada en inglés o discapacidad deben ponerse en contacto con la Oficina de Derechos Civiles de ADOT al (602) 712-8946 or civilrightsoffice@azdot.gov. Las solicitudes deben hacerse tan pronto como sea posible para asegurar que el estado tiene la oportunidad de abordar el alojamiento.

11. All agencies shall list any other matters prescribed by statute applicable to the specific agency or to any specific rule or class of rules. Additionally, an agency subject to Council review under A.R.S. §§ 41-1052 and 41-1055 shall respond to the following questions:

These rules support the Department's obligation to develop easily understandable publications of the laws, rules, and Department policies relating to commercial motor vehicles, trailers, and vehicle combinations as required under A.R.S. § 28-1111 for publication on the Department's web site. The updates and other amendments made by the Department in this rulemaking continue to support the Multistate Highway Transportation Agreement for governing truck size and weight configurations throughout the Western Region of the United States. This agreement helps the Department to:

Promote the uniform laws and regulations adopted by the Policy Committee of the Western Association of State Highway and Transportation Officials (WASHTO) in June 2004 and updated in March 2009;

Ensure a high level of safety for all highway users;

Protect the public investment in Arizona's transportation infrastructure; and

Preserve the state's 6,800 miles of roadways, highways, and freeways containing over 27,000 highway lane miles across 17 districts statewide.

The Department recently launched its modernized, mobile-friendly, Arizona 511 Travel Information System web site that uses the latest technology to provide a customized experience with real-time updates. The new AZ511.gov web site allows users to save their favorite routes and their most used traffic cameras. Before leaving for a destination, each permittee or driver is required under these rules to log onto AZ511.gov to review all incident alerts relative to their intended route, get estimated travel times to their destination, and receive information regarding any detours or alternate routes that may be necessary. A permittee or driver may setup automatic text or email alerts to receive real-time updates on any incidents that may affect transport along their intended route. A permittee or driver may also call the Department's 511 phone line to hear personalized updates. The 511 phone line is now easier to navigate and the voice recognition software has been upgraded.

All transporters subject to this rulemaking are additionally subject to all other federal and state motor carrier safety and hazardous materials regulations currently applicable to Arizona motor carriers.

a. Whether the rules require a permit, whether a general permit is used and if not, the reasons why a general permit is not used:

These rules detail the eligibility, application, and use requirements of a variety of special permits the Department issues to commercial motor carriers for movement of vehicles or vehicle and load combinations exceeding the maximum size or weight limitations provided by statute. Those statutes also provide specific authority for issuance, conditions, restrictions, approvals, and fees for each of the special permits issued by the Department under these rules.

The Department has fully analyzed these rules for compliance with the general permit issuance requirement provided under A.R.S. § 41-1037, and determined that the oversize, overweight, or oversize and overweight special permits issued under these rules are "general permits" in that each permittee issued a particular class of permit is subject to the same activities, practices, requirements, and restrictions applicable to that permit type.

However, safe movement of specialized vehicles and loads throughout the state requires detailed coordination and implementation of complex operations involving many variables, the Department may need to collect more specific information from certain permit holders operating under these rules to make informed decisions on how best to facilitate safe movement and ensure that all appropriate precautions are in place for the preservation of public safety and transportation infrastructure. Certain instances, which generally involve applications submitted for a class C or class E special permit, or when exigent circumstances exist that may require special consideration by the Department or further coordination with the Arizona Department of Public Safety, may fall outside the criteria for general permit issuance and would be an exception to the general permit issuance requirement provided under A.R.S. § 41-1037.

Additionally, under certain circumstances the rules may require additional application for an encroachment permit under A.R.S. § 41-1037 and 17 A.A.C. 3, Article 5, setting forth specific instances in which encroachment permits may be granted and allowing the Department to approve or disapprove an application outside the criteria of these rules. Since some requirements for obtaining an encroachment permit are generally applicable to all encroachment activities while others are specific to the encroaching activity under consideration, the issuance of a general permit as required under A.R.S. § 41-1037, may not always be technically feasible.

b. Whether a federal law is applicable to the subject of the rules, whether the rules are more stringent than federal law and if so, citation to the statutory authority to exceed the requirements of federal law:

This rulemaking provides commercial motor vehicle owners, operators, and drivers with reasonable access to all state and federal highways and routes under the jurisdiction of the Department for interstate and intrastate operations subject to numerous federal laws and regulations designed to facilitate commerce and protect the public investment in transportation infrastructure. The following federal regulations are applicable to the subject matter of the rules, but the rules are not more stringent

than any applicable federal law: 23 CFR 658, Appendix C of 23 CFR 658, 49 CFR 393.5, 49 CFR 393.11, and Table 1 of 49 CFR 393.11.

The Department's rules are subject to review by the U.S. Secretary of Transportation, as provided under 49 U.S.C. § 31141, Review and Preemption of State Laws and Regulations. If the Secretary determines that a state law or regulation is less stringent than a regulation prescribed by the Secretary under 49 U.S.C. § 31136, the state law or regulation may not be enforced. Additionally, if the Secretary determines that the Department is not adequately enforcing all state laws respecting maximum vehicle sizes and weights on highways which, prior to October 1, 1991, were designated as part of the Federal-aid Interstate, Federal-aid primary, Federal-aid secondary or Federal-aid urban systems, the Federal-aid funds for the National Highway System apportioned to the state for the next fiscal year will be reduced by an amount equal to 10 percent of the amount which would otherwise be apportioned to the state under 23 U.S.C. § 104, and/or by the amount required pursuant to 23 U.S.C. § 127.

However, the Department is able to issue special permits using the less stringent maximum permitted weight computations provided under R17-6-411, and Tables 3.01 through 3.09, when issuing an overweight or oversize and overweight special permit for movement of a non-reducible vehicle or load under these rules. The "grandfather" provisions in the Federal-Aid Highway Act amendments of 1974, allow the Department to continue issuing special permits using axle spacing tables that yield higher weights for groups of axles spaced within 3 feet 5 inches and 18 feet since the Tables were enacted prior to the amendments. The Department's axle spacing Tables are an expansion of the Federal Bridge Formula B weights authorized by the Federal Highway Administration and A.R.S. § 28-1100 for use on the National Highway System and are used by the trucking industry for determining the axle spacing needed to appropriately distribute excess weight across multiple groups of axles.

49 U.S.C. § 31141 provides that if the U.S. Secretary of Transportation decides that a state law or regulation is additional to, or more stringent than, a regulation prescribed by the Secretary under 49 U.S.C. § 31136, the state law or regulation may be enforced unless the Secretary also decides that: (A) the state law or regulation has no safety benefit; (B) the state law or regulation is incompatible with the regulation prescribed by the Secretary; or (C) enforcement of the state law or regulation would cause an unreasonable burden on interstate commerce.

c. Whether a person submitted an analysis to the agency regarding the rule's impact of the competitiveness of businesses in this state as compared to the competitiveness of businesses in other states:

No analysis was submitted to the Department.

12. A list of any incorporated by reference material as specified in A.R.S. § 41-1028 and its location in the rules:

This rulemaking incorporates no materials by reference.

13. The full text of the rules follows:

TITLE 17. TRANSPORTATION

CHAPTER 6. DEPARTMENT OF TRANSPORTATION

OVERSIZE AND OVERWEIGHT SPECIAL PERMITS

ARTICLE 1. GENERAL PROVISIONS

Section

R17-6-101. General Provision; Definitions; Time of Day
R17-6-102. Threshold Dimensions; Special Permit Exemptions
Table 1. Threshold Dimensions
R17-6-103. General Application Procedure for Special Permits
R17-6-104. Additional Special Permit Requirements and Restrictions; Engineering Analysis
R17-6-105. Special Permit Limitation
R17-6-106. Special Permit Extension
R17-6-107. Special Permit Confiscation
R17-6-108. Traffic Control Plan
R17-6-109. Special Permit Denial
R17-6-110. Liability
R17-6-111. Administrative Hearing
R17-6-112. Emergency Operation Provision
R17-6-113. Electronic Access to Local Permit Ordinances and Rules

ARTICLE 2. SPECIAL PERMIT CLASSES AND FEES

Section

R17-6-201. Class A Oversize and Overweight Special ~~Permits~~ Permit - ~~Specified~~ Specific Non-reducible Vehicle, Load, or Combination
R17-6-202. ~~Class B Oversize Special Permit - Specified Non-reducible Vehicle and Load Combination~~ Repealed
R17-6-203. Class ~~B - Type R~~ A - Oversize Recreational Vehicle Special Permit - Commercial Transport
R17-6-204. Class C Oversize and Overweight Special Permits - ~~Specified~~ Specific Non-reducible Vehicle, Load, or Combination Over Class A Limits
R17-6-205. Class ~~D~~ A - Crane Oversize and Overweight Special Permit - Self-propelled Mobile Crane, Drilling Rig, or Similar Specialty Equipment
R17-6-206. Class E Oversize and Overweight Special ~~Permits~~ Permit - ~~Reducible~~ Multiple Trailer ~~LCVs~~ LCV or Other Reducible Vehicle and Load Combination
Table 2. Class E LCV or Other Reducible Vehicle and Load Combination Special Permit and Issuance Criteria
R17-6-207. Repealed
R17-6-208. ~~Class G Overwidth Special Permits - Specified Vehicle or Combination with Reducible Load Over Legal Width~~ Repealed

R17-6-209. Class ~~H Overwidth~~ A - Watercraft Special Permit - ~~Specified~~ Specific Vehicle and Overwidth Watercraft Load Combination

~~R17-6-413.~~ R17-6-210. Page-Lake Powell Area Houseboat Transport Provisions

~~Table 5.~~ Table 5. Page-Lake Powell Area Highways

R17-6-211. ~~Western Regional Permit~~ Repealed

R17-6-212. Class C Overweight, or Oversize and Overweight, Special Permit - Tridem Axle Group Configurations

Table 6. ~~Class C Overweight, or Oversize and Overweight, Special Permit Routes and Restrictions for Tridem Axle Group Configurations~~ Repealed

Table 7. ~~Maximum Permitted Weight Computations:~~ Proportionally Reduced Weight Computations for Tridem Axle Group Configurations Measuring Less Than Nine Feet

ARTICLE 3. SAFETY REQUIREMENTS

Section

R17-6-301. General Safety Requirements

R17-6-302. Warning Flag Requirements

Ill. 1. Warning Flag Configurations

R17-6-303. Sign Requirements

Ill. 2. "OVERSIZE LOAD" Sign

R17-6-304. Safety Lighting Device Requirements

Ill. 4. Safety Lighting Configurations

R17-6-305. Escort Vehicles

R17-6-306. Traffic Control Provisions

R17-6-307. Projecting ~~Load or~~ Vehicle or Load; Escort Requirements

R17-6-308. Permittee or Driver Obligation to Notify Utility Companies of Overheight Transport

ARTICLE 4. TRANSPORT PROVISIONS

Section

R17-6-401. General Highway Operations

~~R17-6-402.~~ ~~Speed Restriction~~ Repealed

~~R17-6-408.~~R17-6-402. Continuous Travel; Holiday Transport Restriction

~~R17-6-405.~~R17-6-403. Night and Weekend Transport ~~Allowance~~

R17-6-404. Metropolitan Curfew Transport ~~Restriction~~

~~R17-6-403.~~R17-6-405. Weather Restrictions; Hazardous Conditions

R17-6-406. ~~Holiday Transport Restriction~~ Repealed

R17-6-407. Route-specific and Permit-specific Transport Restrictions

R17-6-408. Renumbered

~~R17-6-409.~~ ~~Night Transport Restriction~~ Repealed

~~R17-6-414.~~R17-6-409. Lake-specific Weekend and Holiday Transport Exception

R17-6-410. Special Mobile Home Towing Restriction

R17-6-411. Maximum Permitted Weights

Ill. 3. Overweight Axle Group Weight Calculation

Table 3.01. ~~Maximum Permitted Weight Computations: Axle Width – 8 Feet~~ Maximum Permitted Weight Computations for Overweight Axle Groups - Axle Width 8 Feet 0 Inches

Table 3.02. ~~Maximum Permitted Weight Computations: Axle Width – 8 Feet 3 Inches~~ Maximum Permitted Weight Computations for Overweight Axle Groups - Axle Width 8 Feet 3 Inches

Table 3.03. ~~Maximum Permitted Weight Computations: Axle Width – 8 Feet 6 Inches~~ Maximum Permitted Weight Computations for Overweight Axle Groups - Axle Width 8 Feet 6 Inches

Table 3.04. ~~Maximum Permitted Weight Computations: Axle Width – 8 Feet 9 Inches~~ Maximum Permitted Weight Computations for Overweight Axle Groups - Axle Width 8 Feet 9 Inches

Table 3.05. ~~Maximum Permitted Weight Computations: Axle Width – 9 Feet~~ Maximum Permitted Weight Computations for Overweight Axle Groups - Axle Width 9 Feet 0 Inches

Table 3.06. ~~Maximum Permitted Weight Computations: Axle Width – 9 Feet 3 Inches~~ Maximum Permitted Weight Computations for Overweight Axle Groups - Axle Width 9 Feet 3 Inches

Table 3.07. ~~Maximum Permitted Weight Computations: Axle Width – 9 Feet 6 Inches~~ Maximum Permitted Weight Computations for Overweight Axle Groups - Axle Width 9 Feet 6 Inches

Table 3.08. ~~Maximum Permitted Weight Computations: Axle Width – 9 Feet 9 Inches~~ Maximum Permitted Weight Computations for Overweight Axle Groups - Axle Width 9 Feet 9 Inches

Table 3.09. ~~Maximum Permitted Weight Computations: Axle Width – 10 Feet~~ Maximum Permitted Weight Computations for Overweight Axle Groups - Axle Width 10 Feet 0 Inches

~~Ill. 3.~~ ~~Overweight Axle Groups~~ Repealed

R17-6-412. Highway-specific Restrictions, Requirements, Conditions, and Allowances

Table 4. Permanent Highway Restrictions, Requirements, Conditions, and Allowances

R17-6-413. Renumbered

Table 5. Renumbered

R17-6-414. Renumbered

ARTICLE 5. ENVELOPE PERMIT SPECIAL PROVISIONS

Section

R17-6-501. General Provision; Definitions

~~R17-6-210.~~R17-6-502. Envelope Permits - Non-specific and Non-reducible Vehicle or Load

R17-6-503. General Application Procedure for Envelope Permits

R17-6-504. Renumbered

R17-6-505. Renumbered

R17-6-506. Page-Lake Powell Area Houseboat Hauling Envelope Permit

~~R17-6-501.~~R17-6-507. Envelope Permit Required Recordkeeping

~~R17-6-502.~~R17-6-508. Envelope Permit Suspension Point System

~~R17-6-503.~~R17-6-509. Envelope Permit Suspension; Revocation; Enforcement

~~R17-6-504.~~R17-6-510. Notice of Point Assessment, Denial, Suspension, or Revocation

~~R17-6-505.~~R17-6-511. Envelope Permit Reapplication

ARTICLE 1. GENERAL PROVISIONS

R17-6-101. General Provision; Definitions; Time of Day

A. General Provision. The Department shall issue and regulate oversize and overweight special permits as provided under this Chapter. The Department implements these Sections under authority of A.R.S. §§ 28-366, 28-1103, 28-1104, and 28-7045, in collaboration with the Overdimensional Permit Council as prescribed under A.R.S. § 28-1150.

B. Definitions. In addition to the definitions prescribed under A.R.S. §§ 28-101 and 28-601, the following terms apply to this Chapter, unless otherwise specified:

"AASHTO" means the American Association of State Highway Transportation Officials.

"ADOT" means the Arizona Department of Transportation.

"Applicant" means a person or entity seeking to obtain a special permit or envelope permit from the Department under A.R.S. Title 28, Chapter 3, Article 18 or 19, and this Chapter.

"Appurtenance" means any not readily removable manufacturer-installed or dealer-installed fixture attached to a vehicle or load that increases a peripheral dimension of the vehicle or load.

"Arizona Central Commercial Permits Office" means the statewide ADOT ECD office ~~for~~ identified on the Department's web site as a location available for oversize and overweight special permit and envelope permit ~~applications and~~ information~~:~~, application, and issuance.

~~1225 N. 25th Avenue~~

~~Phoenix, Arizona 85009~~

~~Voice line: (602) 712-8851~~

~~Facsimile: (602) 272-1887~~

~~Internet: www.azdot.gov/mvd/commercialenforcement/permrequest-forms.asp~~

"Cargo carrying unit" has the same meaning as prescribed under A.R.S. § 28-1103.

"Certified law enforcement officer" means a person who is an active duty Arizona peace officer standards and training board certified peace officer.

"Class C ~~Maintenance~~ Statewide Permit Services" means the statewide ADOT office for class C oversize and overweight special permit applications and information:

206 S. 17th Avenue, Mail Drop 004R

Phoenix, AZ 85007

Voice: (602) 712-8176 or (602) 712-8280

Fax: (602) 712-3380

Internet: www.azdot.gov

"Combination ~~vehicle~~ of vehicles" has the same meaning as prescribed under A.R.S. § 28-101, ~~"combination of vehicles," but excludes~~ and also does not include a mobile home.

"Continuous travel" means ~~to operate a vehicle continuously throughout any 24-hour period~~ the authorization granted by the Department to a permittee or driver for movement of an oversize, overweight, or oversize and overweight vehicle, combination of vehicles, or vehicle and load combination at any time, 24 hours a day, 7 days a week, if transporting in conformance with the size and weight thresholds provided under R17-6-205(A) or R17-6-402(A), except as provided under R17-6-404.

"Department's web site" means www.azdot.gov.

"ECD" means ~~ADOT's~~ the Enforcement and Compliance Division of the Arizona Department of Transportation.

"Emergency vehicle" and "Emergency response vehicle" mean the same as prescribed under 23 U.S.C. § 127, which includes a vehicle designed to be used under emergency conditions to:

Transport personnel and equipment; and

Support the suppression of fires and mitigation of other hazardous situations.

"Envelope" has the same meaning as prescribed under A.R.S. § 28-1141 encompassing the outermost dimensions of a load or vehicle as prescribed under A.R.S. § 28-1144, without exceeding the maximum permitted weight computations for overweight axle group weight distribution as provided under R17-6-411.

"Envelope permit" has the same meaning as prescribed under A.R.S. § 28-1141, which:

Restricts the loads to non-reducible only,

Allows unlimited trips within the permit's validity period,

Allows the permitted motor carrier unlimited load changes,

Requires a transported load to meet envelope dimensional criteria,

Restricts operation to certain routes, and

Excludes the transporting of a mobile home.

"Escort" has the same meaning as prescribed under A.R.S. § 28-601, "escort vehicle."

"Established place of business" means a permanent site or location where an oversize or overweight special permit or envelope permit holder conducts business.

"Highway" has the same meaning as prescribed under A.R.S. § 28-101, "street" or "highway."

"Highway feature" means a roadway, structure, traffic control device, right-of-way, or any item connected with highway travel.

"IFTA license" means an interstate user license issued by an applicant's base jurisdiction for fuel tax purposes under the International Fuel Tax Agreement as provided under A.R.S. Title 28, Chapter 16, Article 2, for operation of a use class motor vehicle that is not a recreational vehicle, but is a motor vehicle or vehicle combination designed, used, or maintained primarily for the transportation of persons or property, and:

Has two axles and a gross vehicle weight rating or declared gross vehicle weight of 26,001 pounds or more;

Has three or more axles regardless of weight; or

Has a gross combined weight rating or declared gross combined weight of 26,001 pounds or more.

"Interstate Highway System" means any segment of the Dwight D. Eisenhower System of Interstate and Defense Highways located within the boundaries of this state, officially designated by the state transportation board, and approved by the United States secretary of transportation pursuant to 23 United States Code.

"Law enforcement escort" means a uniformed certified law enforcement officer in a fully marked patrol vehicle that accompanies an oversize or overweight special permitted vehicle.

"LCV" means longer combination vehicle, which has the same meaning as prescribed under 23 CFR 658.5.

"Long single-trailer combination" means a truck tractor - semitrailer combination or truck tractor - semitrailer - forklift combination exceeding a maximum length limitation provided under R17-6-102, Table 1. A long single-trailer combination has more axles to bridge more weight and may transport a reducible or non-reducible load with an overall gross weight exceeding 80,000 pounds using spread-axle, tridem-axle, or quad-axle group configurations.

"Legal weight" means within the maximum gross weight limitations prescribed under A.R.S. § 28-1100 and R17-6-102, Table 1.

"Mobile home" has the same meaning as prescribed under A.R.S. § 28-2001, which also encompasses ~~both~~ a mobile home, ~~and~~ a manufactured home, and a factory-built building as more specifically prescribed under A.R.S. § ~~41-2142~~ 41-4001, if used in the same context as a mobile home prescribed under A.R.S. § 28-2001.

"Motor home" has the same meaning as prescribed under A.R.S. § 28-4301.

"Mountain Standard Time" means the standard time in Arizona as prescribed under 49 CFR 71 and A.R.S. § 1-242.

"National Network" has the same meaning as prescribed under A.R.S. § 28-1092, designated under A.R.S. § 28-1093(C), and detailed under:

23 CFR 658, appendix A, for movement of a vehicle, combination of vehicles, or vehicle and load combination exceeding an overall length or width limitation provided under R17-6-102, Table 1; or

23 CFR 658, appendix C, and A.R.S. § 28-1095(F), for movement of longer combination vehicles, long single-trailer combinations, or long truck-trailer configurations exceeding a size or weight limitation provided under R17-6-102, Table 1.

"Natural forest products" include raw or unfinished logs, timber, pulpwood, biomass, wood chips, etc.

"Non-articulated" means any segment of a vehicle or combination of vehicles constructed or configured without hinged mechanisms, bendable joints, or other flexible points of pivot, swivel, or turning, which may hinder or prevent vertical or horizontal movement during transport or while attempting to negotiate turns.

"Non-reducible" or "non-reducible load or vehicle" has the same meaning as prescribed under 23 CFR 658.5, "nondivisible load or vehicle~~.~~," which applies to any load or vehicle exceeding an applicable length or weight limit that if separated into smaller loads or vehicles would:

1. Compromise the intended use of the vehicle, i.e., make it unable to perform the function for which it was intended;
2. Destroy the value of the load or vehicle, i.e., make it unusable for its intended purpose; or
3. Require more than eight workhours to dismantle using appropriate equipment, with the applicant having the burden of proof as to the number of workhours required to dismantle the load.

"Oversize" means a size of vehicle, combination of vehicles, or vehicle and load combination that exceeds a maximum legal size limitation provided under A.R.S. Title 28, Chapter 3, Article 18 or 19.

"Over-the-road bus" has the same meaning as prescribed under A.R.S. § 28-1099.

"Overweight" means a weight of vehicle, combination of vehicles, or vehicle and load combination that exceeds a maximum legal weight limitation provided under A.R.S. Title 28, Chapter 3, Article 18 or 19.

"Permittee" means a person or entity to whom the Department issues an oversize or overweight special permit or envelope permit under this Chapter, and who is responsible for meeting the obligations, responsibilities, and specifications indicated on the permit.

"Person" has the same meaning as prescribed under A.R.S. § 28-5201.

~~"Pounds per inch of tire width" means a measure of load restriction based on rated tire size, which is determined by dividing the weight carried by an axle group, in pounds, by the number of tires in the group and dividing that result by the manufacturer's rated tire width indicated on the sidewall of the tire, or in the absence of sidewall marking, the load rating specified in any publication of an organization listed under 49 CFR 571.119, Federal Motor Carrier Safety Standard No. 119.~~

"Power unit" has the same meaning as prescribed under A.R.S. § 28-1141.

"Public weighmaster" has the same meaning as prescribed under A.R.S. § ~~41-2051~~ 3-3401.

"Special permit" means a document issued by the Department under A.R.S. § 28-1103, which authorizes ~~the~~ a permittee or driver to operate or transport an oversize, overweight, or oversize and overweight vehicle, combination of vehicles, or vehicle and load combination on ~~a state highway~~ the State Highway System, subject to the terms and conditions of the permit issued.

"Special permitted vehicle" means the vehicle, combination of vehicles, or vehicle and load combination described to the Department by a special permit applicant on application for a special permit, as required under A.R.S. § 28-1104 ~~on application for a special permit~~, the description of which is then recorded on the Department's computer systems for analysis, approval, and subsequent documentation on any special permit issued by the Department.

"Specified load" means the dimensions and weights a special permit applicant declares to the Department, as provided under A.R.S. § 28-1104, regarding any item or series of items to be transported throughout an entire permit period.

"State Highway System" means all state routes and state highways owned, operated, and maintained by the Department as designated by the state transportation board under A.R.S. § 28-304(B)(2), including all U.S. routes and Interstate highways located within the boundaries of this state.

"Sunrise" and "sunset" have the same meaning and daily calculation as prescribed by the United States Naval Observatory (USNO), which:

The Department uses to determine normal permit transport start and stop times as provided under R17-6-401; and

An interested person may access ~~on the Internet from the USNO at http://aa.usno.navy.mil~~ online at aa.usno.navy.mil, or in hardcopy format from the Arizona Central Commercial Permits ~~office~~ Office or any Arizona Port of Entry location listed on the Department's web site.

"Tandem axle" has the same meaning as prescribed under A.R.S. § 28-1100(B).

"TI" means traffic interchange, which is a junction of roadways arranged to allow for the free flow of traffic uninterrupted by crossing traffic routed over or under the main roadway.

"Towaway trailer transporter combination" means a combination of vehicles consisting of a trailer transporter towing unit and two trailers or semitrailers as inventory of the trailer or semitrailer manufacturer, distributor, or dealer, and the total weight of the combination plus any property carried does not exceed 26,000 pounds.

"Trailer transporter towing unit" means a power unit that is not used to carry property when in a towaway trailer transporter combination.

"Tridem axle" means a group of three axles connected by a common suspension system, or any three consecutive single axles whose extreme centers ~~are not more than 144 inches~~ may be included between parallel transverse vertical planes spaced eight to fourteen feet apart, extend across the width of the vehicle, and are individually attached to, or articulated from, a common attachment to the vehicle, ~~including a connecting mechanism~~ or are designed to automatically equalize the load between the three axles.

"USDOT number" means the motor carrier identification number, assigned to a company by the U.S. Department of Transportation's Federal Motor Carrier Safety Administration, preceded by the letters USDOT.

"Use class motor vehicle" has the same meaning as prescribed under A.R.S. § 28-5601.

"UX" means a temporary highway or route segment designated by the Department as:

A segment of highway no longer part of the mainline U.S. system of highways, but still owned and maintained by the Department; or

A portion of a U.S. Route affected by mining operations and subject to realignment by the mining company as the mine expands operations.

"Watercraft" has the same meaning as prescribed under A.R.S. § 5-301 that is properly registered with the Arizona Game and Fish Department or the U.S. Coast Guard.

C. Time of Day. In this Chapter, a time of day prescribed is Mountain Standard Time as defined under subsection (B) except where ~~a state highway~~ a route on the State Highway System traverses a tribal nation that adopts Daylight Saving Time under 49 CFR 71.2.

R17-6-102. Threshold Dimensions; Special Permit Exemptions

A. Unless exempt under this Section or A.R.S. § 28-1091(C), § 28-1093(D), or § 28-1095(A)(6), a person shall obtain and carry an oversize or overweight special permit issued by the Department under this Chapter if transporting a vehicle or load exceeding any dimension provided under Table 1 ~~on a state highway under the jurisdiction of the Department~~ using any route on the State Highway System.

B. A permittee and a driver of an oversize or overweight special permitted vehicle shall comply with all applicable:

1. Safety requirements provided under Article 3, and
2. Transport provisions provided under Article 4.

C. An oversize or overweight special permit is not required if crossing a ~~state highway~~ route on the State Highway System at a level grade and no highway structures are involved.

D. An oversize or overweight special permit is not required for snow removal equipment operated by one of the following:

1. An Arizona state agency,
2. An Arizona county,
3. An Arizona city, or
4. An Arizona municipality other than a city.

E. The special permit exemption provided under subsection (D) applies only to snow removal equipment traveling on its own wheels and:

1. Operating for the purpose of clearing snow or ice,
2. Traveling to a facility for repair, or
3. Traveling to a location used for the purpose of loading or unloading de-icing materials.

F. The operator of an oversize or overweight vehicle exempt from the special permit requirement under this Section shall comply with all applicable safety requirements provided under Article 3 unless otherwise prescribed by statute.

Table 1. Threshold Dimensions

The Department ~~shall~~ may issue an applicable class of special permit, as provided under Article 2, for ~~each~~ transporting on the State Highway System a vehicle, combination of vehicles, or vehicle and load combination~~,~~ exceeding any of the following maximum limits:

~~**Width (A.R.S. § 28-1093)**~~	
~~Vehicles operating on the state highway system designated by the Transportation Board under A.R.S. § 28-304(B)(2)~~	~~8' 6" (8' if the maximum width of the route is further restricted under R17-6-412, Table 4)~~
~~**Height (A.R.S. § 28-1094)**~~	

~~Vehicles operating on the state highway system designated by the Transportation Board under A.R.S. § 28-304(B)(2)~~	~~14' (13' 6" if the maximum height of the route is further restricted under R17-6-412, Table 4)~~	
~~**Length (A.R.S. §§ 28-1095 and 28-1097)**~~		
~~Straight trucks~~		~~40'~~
~~Truck tractor - semitrailer combination or~~ ~~Truck tractor - semitrailer - forklift combination~~	~~Interstate system~~	~~57' 6" semitrailer~~
~~Truck tractor - semitrailer combination or~~ ~~Truck tractor - semitrailer - forklift combination~~	~~Other highways~~	~~53' semitrailer; or 65' overall combination if more than 53'~~
~~Truck tractor - semitrailer - full trailer combination~~		~~28' 6" per trailer~~
~~Vehicle transporter combination~~		~~75'~~
~~Overhang~~	~~Front of vehicle~~ ~~Rear of vehicle or trailer~~	~~3'~~ ~~6'~~
~~**Weight (A.R.S. § 28-1100)**~~ ~~Allowable weight shall be determined using the listed limits or the manufacturer's weight rating, whichever is less.~~		
~~Single axle~~		~~20,000 lbs.~~
~~Tandem axle~~		~~34,000 lbs.~~
~~Steering axle~~		~~20,000 lbs.~~
~~Gross weight; five axles or more~~ ~~Maximum allowable axle group weights are computed using the formula prescribed under A.R.S. § 28-1100(A)(4)~~		~~80,000 lbs.~~

Width (A.R.S. § 28-1093)	**Height (A.R.S. § 28-1094)**	
8' 6" (8' if the maximum width of the route is further restricted under R17-6-412, Table 4)	14' (13' 6" if the maximum height of the route is further restricted under R17-6-412, Table 4)	
Length (A.R.S. §§ 28-1095 and 28-1097 and 23 CFR 658.13) Legal for travel on the State Highway System, including all Interstate highways, on the federally-designated National Network of highways and routes listed under 23 CFR 658, App. A, and on other highways and routes located within ten miles of an Interstate highway.		
Overhang	Front of vehicle Rear of vehicle or trailer	3' 6'
Straight truck		40'
Bus, or recreational vehicle as defined in A.R.S. § 41-4001(30)(b), if non-articulated		45'
Truck equipped with a conveyor bed and used solely as a fiber and forage module mover		48'

Truck tractor - semitrailer - trailer combination Truck tractor - semitrailer - semitrailer combination (B-train)	28’ 6” per semitrailer or trailer; and 65’ overall combination
Truck - trailer combination Truck - forklift combination Truck - semitrailer combination	28’ 6” trailer; or 65’ overall combination
Truck tractor - semitrailer combination (for travel on the National Network) Truck-tractor - semitrailer - forklift combination	57’ 6” semitrailer; or 65’ overall combination
Bus or trolley coach, if articulated	65’ overall combination
Recreational vehicle (motor home, or a pickup truck with camper or fifth wheel trailing device), power unit, farm vehicle, horse trailer, or wheeled equipment (as defined in A.R.S. § 28-2153), when used in combination with two units	65’ overall combination
Pole trailer with non-reducible load (e.g., poles, pipes, structural material, etc.)	80’ cargo carrying length
Vehicle or boat transporter combination (stinger-steered) *Measurement of overall combination excludes extendable ramps and an overhang allowance of 4’ to the front of the vehicle and 6’ to the rear of the semitrailer	80’ overall combination*
Towaway trailer transporter combination	82’ overall combination
Drive-away saddlemount vehicle transporter combination with up to three saddlemounted vehicles (may include one fullmount)	97’ overall combination
Weight (A.R.S. §§ 28-1099 and 28-1100 and 23 U.S.C. § 127) Legal for travel on the State Highway System, the Interstate Highway System, the federally-designated National Network of highways and routes listed under 23 CFR 658, App. A, and other highways and routes located within ten miles of an Interstate highway. Legal weight shall be determined using the listed limits or the manufacturer’s weight rating, whichever is less.	
Steering axle	20,000 lbs.
Single axle	20,000 lbs.
Single axle for a motor home; over-the-road bus; or vehicle regularly and exclusively used as an intrastate public agency transit passenger bus	24,000 lbs.
Tandem axle group (if the overall distance between the first and last axles of any consecutive sets of axle groups is 36 feet or more without exceeding 80,000 lbs.)	34,000 lbs.
Towaway trailer transporter combination	26,000 lbs. overall combination
Vehicle combination of five axles or more with axle group weights computed using the formula prescribed under A.R.S. § 28-1100(A)(4)	80,000 lbs. overall combination

Emergency vehicle configured in compliance with all axle weight limitations prescribed under 23 U.S.C. § 127(r)	86,000 lbs. overall combination, except on any portion of a non-Interstate route containing a weight-restricted bridge indicated by the Department under R17-6-412, Table 4, or by appropriate highway signage.
A vehicle with an engine fueled primarily by natural gas, may exceed any vehicle weight limit (up to a maximum gross vehicle weight of 82,000 pounds) provided under 23 U.S.C. 127, by an amount that is equal to the difference between: the weight of the vehicle attributable to the natural gas tank and fueling system carried by that vehicle; and the weight of a comparable diesel tank and fueling system.	

R17-6-103. General Application Procedure for Special Permits

~~**A.** Except as provided under subsections (E) and (F), an applicant shall apply to the Department using one of the following methods.~~

~~1. For an oversize or overweight special permit:~~

~~a. Complete an oversize/overweight special permit application form, available on the Department's web site at www.azdot.gov, and fax, mail, or deliver the written application to the Arizona Central Commercial Permits office at the location provided under R17-6-101, or an Arizona port of entry identified by the Department on its Enforcement Compliance Division – Commercial Vehicle Enforcement Services web page; or~~

~~b. Complete and submit the oversize/overweight special permit application form online at www.azdot.gov or apply through the Department's electronic service provider if the appropriate permit is available for online purchase.~~

~~2. For an envelope permit:~~

~~a. Complete an envelope permit application form, available on the Department's web site at www.azdot.gov, and fax, mail, or deliver the written application to the Arizona Central Commercial Permits office at the location provided under R17-6-101; or~~

~~b. Submit the written application form to an Arizona port of entry identified by the Department on its Enforcement Compliance Division – Commercial Vehicle Enforcement Services web page.~~

A. Unless otherwise provided in this Chapter, an applicant requesting a special permit for transporting an oversize, overweight, or oversize and overweight vehicle, combination of vehicles, or vehicle and load combination shall apply to the Department using the appropriate application method provided below for each type of permit required:

1. For an oversize or overweight special permit authorizing movement of a specific non-reducible vehicle, combination of vehicles, or vehicle and load combination with dimensions that do not exceed the class A oversize and overweight special permit limitations provided under R17-6-201, or the maximum permitted weight computations for overweight axle group weight distribution provided under R17-6-411:

   a. Complete the online application process using the Department's electronic permitting system available on the Department's web site; or

b. Complete an oversize/overweight special permit application form, available on the Department's web site, and mail or deliver the written application to the Arizona Central Commercial Permits Office indicated on the application, or to any Arizona Port of Entry location listed on the Department's web site.

2. For a class C - Tridem oversize, overweight, or oversize and overweight special permit authorizing movement of a specific non-reducible vehicle, combination of vehicles, or vehicle and load combination that does not exceed class A oversize and overweight special permit limitations for width, height, or length as provided under R17-6-201, the maximum permitted weight distribution of 60,000 lbs. per tridem axle group as provided under R17-6-212, or any other applicable State Highway System restrictions, conditions, or allowances prescribed by the Department under R17-6-412, Table 4:

a. Complete the online application process using the Department's electronic permitting system available on the Department's web site; or

b. Complete an oversize/overweight special permit application form, available on the Department's web site, and mail or deliver the written application to the Arizona Central Commercial Permits Office indicated on the application, or any Arizona Port of Entry location listed on the Department's web site.

3. For a class C special permit, class C - Mobile Home special permit, or Easy C - Mobile Home special permit authorizing movement of a specific non-reducible vehicle, combination of vehicles, or vehicle and load combination with any dimension that exceeds a class A oversize and overweight special permit limitation provided under R17-6-201, a maximum permitted weight computation for overweight axle group weight distribution provided under R17-6-411, or any other applicable State Highway System restrictions, conditions, or allowances prescribed by the Department under R17-6-412, Table 4:

a. Complete the online application process using the Department's electronic permitting system available on the Department's web site; or

b. Complete an oversize/overweight special permit application form, available on the Department's web site, and fax, mail, or deliver the written application to Class C Statewide Permit Services at the address indicated on the application; and

c. Follow all additional application procedures provided under R17-6-104 and R17-6-204.

4. For a class A - Crane oversize, or oversize and overweight, special permit authorizing movement of a self-propelled mobile crane, drilling rig, or similar specialty equipment, follow the applicable application procedures provided under subsection (A)(1) or (A)(2) of this Section and include all information required under R17-6-205.

5. For a class E special permit, authorizing movement of an LCV or other reducible vehicle and load combination using specific routes, follow the application procedure provided under R17-6-206.

B. Unless otherwise provided under this Chapter, an applicant for an oversize or overweight special permit ~~or envelope permit~~ shall provide to the Department, at the time of application, all applicable fees and information required by the Department for issuance of ~~the~~ an appropriate class of permit, including:

1. ~~Company~~ Motor carrier related information:

a. Name and address of the applicant's principal or established place of business;

b. Name, phone number, and email address of an official company representative; and

c. USDOT number;

2. Power unit related information:

a. Vehicle make, body style, and year;

b. Vehicle identification number;

c. Unit number assigned;

d. License plate number; and

e. Base jurisdiction - state of registration;

3. Vehicle and load combination related information:

a. Trailer plate number(s);

b. Total number of axles;

c. Overall gross weight;

d. Overall length, width, and height; and

e. Length of front and rear overhang if applicable;

4. Load related information:

a. Specific load description;

b. State and federal routes requested;

c. Starting and ending location within the state;

d. If the load is overweight:

i. Axle spacing measurements,

ii. Axle width measurements,

iii. Number of tires per axle,

iv. Weight measurements per axle, and

v. Width of each tire;

~~e. If the load is a mobile home:~~

~~i. Complete serial number; and~~

~~ii. Evidence of payment of all applicable ad valorem taxes, as required under A.R.S. § 28-1104, in the form of a 504 tax clearance permit issued by the county in which the mobile home is currently located;~~

5. Load related information for movement of a mobile home shall additionally include:

a. Manufacturer's name;

b. Brand name or model;

c. Complete serial number assigned; and

d. Evidence of payment of all applicable ad valorem taxes pursuant to A.R.S. § 28-1104, in the form of a Mobile Home Property Tax Clearance 504 (DOR Form 82504) issued by the county in which the mobile home is currently located, if movement of the mobile home is being conducted for a reason other than an original sale, exchange, or lease-purchase to a consumer.

~~5.~~6. Proof of valid registration that complies with the requirements of A.R.S. § 28-2153; and

~~6.~~7. Proof of a valid IFTA license that complies with the requirements of A.R.S. § 28-5742, if applicable.

C. An applicant for an oversize or overweight special permit shall certify to the Department that all information provided on the application is true and correct.

~~**D.** An applicant requesting a special permit for transport of a self propelled mobile crane, drilling rig, or similar specialty equipment shall additionally follow the application procedure provided under R17-6-205.~~

~~**E.** An applicant requesting a special permit for transport of a specific non-reducible vehicle and load combination with a dimension that exceeds a class A oversize and overweight special permit limitation provided under R17-6-201, or that exceeds the maximum permitted weight computations for overweight axle group weight distribution as provided under R17-6-411, shall follow the application procedures provided under R17-6-104 and R17-6-204.~~

~~**F.** An applicant requesting a special permit for transport of an LCV shall follow the application procedure provided under R17-6-206.~~

D. For the purposes of oversize or overweight special permit application and issuance under this Article for travel on the State Highway System, the term "non-reducible load or vehicle" may include any of the following vehicles, or vehicle and load combinations:

1. Casks designed for the transport of spent nuclear materials;
2. Emergency response vehicles, including those loaded with salt, sand, chemicals or a combination thereof, with or without a plow or blade attached in front, and being used for the purpose of spreading the material on highways that are or may become slick or icy;
3. Military vehicles transporting marked military equipment or material;
4. Bulk milk transport tankers or trucks carrying fluid milk products; and
5. Vehicles or vehicle and load combinations transporting or removing natural forest products or biomass from certain areas within this state, subject to all terms and conditions set by the Department on issuance of a special permit, as provided under R17-6-207.

R17-6-104. Additional Special Permit Requirements and Restrictions; Engineering Analysis

A. To promote safe transport of oversize and overweight vehicles, combinations of vehicles, or vehicle and load combinations, the Department's Class C ~~Maintenance~~ Statewide Permit Services section shall evaluate each class C special permit application to determine, on a case-by-case basis, whether additional permit requirements or restrictions are appropriate and necessary as a condition of permit approval. The Department's decision to require additional permit restrictions shall be based on its consideration of:

1. Bridge capacities;
2. Load size and weight;
3. Pavement stress;
4. Road width, grade, and condition; and
5. Traffic dynamics of the proposed route.

B. The Department shall require a special permit applicant to obtain an engineering analysis for transport of an overweight vehicle, combination of vehicles, or vehicle and load combination:

1. Exceeding 250,000 pounds;

2. Exceeding the maximum permitted weight computations for overweight axle group weight distribution as provided under R17-6-411; or
3. Exceeding a bridge weight restriction provided under R17-6-412, Table 4.

C. If the Department requires an engineering analysis of a proposed route as a condition of permit approval, and is unable to dedicate the employee resources necessary to timely complete the required analysis, a special permit applicant may obtain an analysis prepared by a non-Department engineer at the applicant's own expense.

1. An engineer registered by the Arizona State Board of Technical Registration in structural or civil engineering, as prescribed under A.R.S. Title 32, Chapter 1, shall prepare an engineering analysis of the proposed route according to industry standards.
2. The special permit applicant shall submit to the Department for review any engineering analysis prepared by a non-Department engineer.
3. An engineering analysis prepared according to the following publications, available on the Department's web site at www.azdot.gov, complies with industry standards:
   a. The most recently published edition of the AASHTO Manual for Bridge Evaluation, including all interims, standards, or guidelines;
   b. The most recently published edition of the AASHTO Load and Resistance Factor Design (LRFD) - Bridge Design Specifications, including all interims, standards, or guidelines; and
   c. The ADOT Bridge Load Rating Guidelines and Bridge Design Guidelines.
4. The non-Department engineer shall certify that an applicant's overweight vehicle will not overstress or damage any element of:
   a. A highway structure, or
   b. Any other state property.

D. An applicant for a class C special permit shall submit to the Department, at the time of special permit application, all applicable fees required under R17-6-204 for preparation or review of an engineering analysis.

E. An applicant for a class C special permit may resubmit an engineering analysis approved by the Department within the previous 12 months if:

1. The size and weight of the applicant's vehicle and load are identical to the previously approved permit application;
2. The segments of the applicant's proposed route are within the outer limits of the previously approved route; and
3. The condition of the highway structure or other state property has not changed.

F. The Department shall conduct a separate review and approval process for each engineering analysis submitted under this Section.

G. If the applicant's engineering analysis shows that a highway structure will not support the overweight vehicle as requested, the Department shall deny the application for a class C special permit.

H. If the Department determines a potential traffic safety risk exists, a class C special permit applicant shall submit to the Department a comprehensive traffic control plan as provided under R17-6-108.

I. The Department of Transportation, the Department of Public Safety, or any other law enforcement entity lawfully authorized to provide certified weights may weigh a class C special permitted vehicle and load exceeding 250,000 pounds, or require the applicant to have the vehicle and load weighed as prescribed under A.R.S. § 28-1102.

R17-6-105. Special Permit Limitation

~~The Department shall issue oversize and overweight special permits for state highways.~~ On application to the Department using an appropriate application method provided under this Chapter, an applicant or permittee may obtain a special permit authorizing transport of an oversize, overweight, or oversize and overweight vehicle or vehicle and load combination on any part of the State Highway System. ~~A~~ An applicant or permittee shall apply separately with ~~an~~ other applicable political ~~subdivision~~ subdivisions or tribal ~~nation~~ nations for permission to operate on a county, municipal, or tribal route.

R17-6-106. Special Permit Extension

A. Upon request by a permittee, the Department ~~shall~~ may authorize a one-time extension of up to four days for a single-trip special permit if:

1. The permittee needs to exchange a permitted vehicle for another due to mechanical failure, or
2. Transport by the permitted vehicle is delayed by inclement weather.

B. Except as provided under subsection (C), ~~the special permit extension authorization~~ a permittee may request and receive authorization for the extension provided under subsection (A) ~~is administered:~~ by contacting the Department at the telephone number indicated on the special permit.

~~1. By signature of an authorized ECD agent, or~~

~~2. By telephone in an emergency situation after first contacting Arizona Central Commercial Permits or the Arizona port of entry closest to the affected area as listed on the Department's web site at www.azdot.gov.~~

C. A special permit extension authorization for a class C special permit is administered only by Class C ~~Maintenance~~ Statewide Permit Services by contacting the Department at the telephone number indicated on the special permit.

D. A ~~class C~~ special permit extension request due to mechanical failure shall include:

1. A written statement from the repair facility, on company letterhead, referencing the necessary repairs; and
2. Any new power unit and registration numbers, if applicable.

R17-6-107. Special Permit Confiscation

A. Except as provided under subsection (B), a peace officer designated by the Director under A.R.S. § 28-369 may confiscate an oversize or overweight special permit before its expiration date if the permittee or driver is cited for a violation of this Chapter or A.R.S. Title 28, Chapter 3, Article 18.

B. The Director may suspend, revoke, and retrieve an envelope permit as provided under A.R.S. § 28-1147 and ~~R17-6-503~~ R17-6-509.

R17-6-108. Traffic Control Plan

A. To promote safe transport of oversize and overweight vehicles, combinations of vehicles, or vehicle and load combinations, the Department shall evaluate each class C special permit application ~~to determine,~~ on a case-by-

case basis, to determine whether a potential traffic safety risk exists that may require a comprehensive traffic control plan as a condition of permit approval. The Department's decision to require a comprehensive traffic control plan shall be based on its consideration of:

1. Bridge capacities;
2. Load size and weight;
3. Pavement stress;
4. Road width, grade, and condition; and
5. Traffic dynamics of the proposed route.

B. If the Department determines a potential traffic safety risk exists, a class C special permit applicant shall submit to Class C ~~Maintenance~~ Statewide Permit Services at the time of special permit application, a comprehensive traffic control plan prepared as follows:

1. Identify all roadway features located along the proposed route that may inhibit movement of the vehicle, combination of vehicles, or vehicle and load combination;
2. Identify all obstructions that may be subject to potential disturbance or damage;
3. Specify how all structures, delineators, foliage, and official traffic control devices will be managed or avoided;
4. Specify all available pullout points located along the proposed route listed by highway and milepost number;
5. Specify how all side traffic will be managed;
6. Specify the rate of speed at which the load will travel along the proposed route;
7. ~~Specify the approximate~~ Provide an approximation of all travel times ~~when~~ the load ~~will~~ is anticipated to be in transit; and
8. Provide a contingency plan to be followed in the event of a breakdown.

C. As a condition of class C special permit issuance, the Department may require an applicant to coordinate use of one or more law enforcement escorts as needed to ensure public safety while transporting a proposed load.

R17-6-109. Special Permit Denial

The Department shall deny an oversize or overweight special permit application, or revoke and confiscate a previously approved special permit, if:

1. The proposed transport route or a structure on the route is:
   a. Unable to bear the size or weight of the transport vehicle and load according to the maximum permitted weight computations for overweight axle group weight distribution as provided under R17-6-411,
   b. Under repair, or
   c. Temporarily closed due to a hazardous condition listed under ~~R17-6-403(B)~~ R17-6-405;
2. An applicant for a permit to transport a mobile home does not provide written proof of ad valorem tax payment or clearance as required under A.R.S. § 28-1104; or

3. The Department determines that the special permit applicant made a material misrepresentation or misstatement on the permit application or any other document submitted to the Department in support of the permit application.

R17-6-110. Liability

A person who operates an oversize or overweight special permitted vehicle and a person who causes the vehicle to be operated shall be liable for any damage caused to a state highway by the oversize or overweight vehicle or load during transport as provided under A.R.S. § 28-1107.

R17-6-111. Administrative Hearing

If the Department denies an oversize or overweight special permit application, or revokes and confiscates a previously issued special permit, the permittee may appeal the action using the procedure provided under 17 A.A.C. 1, Article 5.

R17-6-112. Emergency Operation Provision

A. ~~In time of~~ For a statewide or local emergency that affects public welfare or safety, according to general powers under A.R.S. §§ 28-363(A)(5) and 28-364(B), the Director may authorize transport of an oversize or overweight vehicle or load without a special permit for purposes of relief or repair.

B. For a national emergency, the Director may issue a special permit authorizing operation of a reducible oversize or overweight vehicle, or vehicle and load combination, on the Interstate Highway System if the President has declared an emergency or a major disaster under 42 U.S.C. § 5121. A special permit provided by the Department under this subsection shall be:

1. Issued in accordance with all applicable state laws;
2. Issued exclusively for delivering relief supplies or providing other direct assistance in efforts to help alleviate any damage, loss, hardship, or suffering caused by such event; and
3. Issued to expire not later than 120 days after the date on which the President declares the emergency or major disaster, whichever declaration occurred first.

~~**B.**~~**C.** Authorization for emergency operation under this Section may be obtained by contacting ~~the Arizona port of entry closest to the affected area as listed on the Department's web site at www.azdot.gov~~ the Department's Traffic Operations Center at 1-800-379-3701.

R17-6-113. Electronic Access to Local Permit Ordinances and Rules

A. A local authority that issues oversize and overweight special permits under A.R.S. § 28-1103 and this Chapter shall make available, to the Department's ~~Arizona Central~~ Enforcement and Compliance Division, Commercial Permits ~~office~~ Office, an Internet web link to where the local authority's current ordinances and rules relating to the excess size and weight special permits can be electronically accessed.

B. The Department shall immediately post~~, to its web site at www.azdot.gov,~~ each ~~Internet~~ web link ~~provided by~~ received from a local authority under subsection (A) and A.R.S. § 28-1103 to the Commercial Vehicle Permits section of its web site at www.azdot.gov.

ARTICLE 2. SPECIAL PERMIT CLASSES AND FEES

R17-6-201. Class A Oversize and Overweight Special ~~Permits~~ Permit - ~~Specified~~ Specific Non-reducible Vehicle, Load, or Combination

A. The Department shall issue a ~~multiple or~~ single trip, multiple trip, or annual class A oversize, overweight, or oversize and overweight special permit according to the following criteria for a ~~specified nonreducible~~ specific non-reducible vehicle, combination of vehicles, or vehicle and load combination that exceeds a dimension provided under R17-6-102, Table 1, but does not exceed the maximum permitted weight computations for overweight axle group weight distribution as provided under R17-6-411, or any of the following maximum limits:

Vehicle or load description	A specific non-reducible ~~specified~~ vehicle or load over a threshold dimension provided under R17-6-102, Table 1, to a maximum:	
	Width	14 feet
	Height	16 feet
	Overall length	120 feet
	~~Width~~	~~14 feet~~
	Weight	250,000 lbs.
~~Permit option~~	~~Single trip: 96-hour maximum~~	
	~~Multiple trip: 30-day maximum~~	
Standard permit fee for weight not exceeding 80,000 pounds (A.R.S. § 28-1105)	Single trip: 96-hour maximum	$15
	Multiple trip: 30-day maximum	$30
	Multiple trip: one year	$360
Overweight permit fee for weight ~~less than 250,000 pounds but that exceeds~~ exceeding the legal threshold under R17-6-102, Table 1, but not exceeding 250,000 pounds (A.R.S. § 28-1105)	Single trip	$75
	Multiple trip: 30-day maximum	$75
	Multiple trip: one year	$600

B. An applicant for a class A oversize, overweight, or oversize and overweight special permit shall apply to the Department and submit appropriate fees using the application procedure provided under R17-6-103.

C. A permittee or driver of an oversize, overweight, or oversize and overweight vehicle, combination of vehicles, or vehicle and load combination shall not access a route listed under R17-6-412, Table 4, unless operating in full compliance with all indicated restrictions and requirements.

D. The Department shall require a class C special permit for an overweight vehicle, combination of vehicles, or vehicle and load combination heavier than 250,000 pounds or that exceeds the maximum permitted weight computations for overweight axle group weight distribution as provided under R17-6-411.

R17-6-202. ~~Class B Oversize Special Permit - Specified Non-reducible Vehicle and Load Combination~~ Repealed

~~**A.** The Department shall issue an annual class B oversize special permit according to the following criteria for multiple trips of a specified non-reducible vehicle and load combination that exceeds a dimension provided under R17-6-102, Table 1, but does not exceed the maximum permitted weight computations for overweight axle group weight distribution as provided under R17-6-411 or any of the following maximum limits:~~

~~Vehicle or load description~~	~~A non-reducible, specified vehicle and load combination (excluding cranes and drill rigs) over a threshold dimension provided under R17-6-102, Table 1, to a maximum:~~	
	~~Height~~	~~14 feet 8 inches~~
	~~Overall length~~	~~80 feet~~
	~~Width~~	~~12 feet 6 inches~~
	~~Weight~~	~~80,000 lbs.~~
~~Permit option~~	~~Multiple trip: one year~~	
~~Fee (A.R.S. § 28-1105)~~	~~$360~~	

~~**B.** An applicant for a class B oversize special permit shall apply to the Department and submit appropriate fees using the application procedure provided under R17-6-103.~~

~~**C.** A permittee or driver of an oversize or overweight vehicle or load shall not access a route listed under R17-6-412, Table 4, unless operating in full compliance with all indicated restrictions and requirements.~~

R17-6-203. Class ~~B - Type R~~ A - Oversize Recreational Vehicle Special Permit - Commercial Transport

A. The Department shall issue ~~an annual~~ a class ~~B - Type R oversize~~ A - Oversize Recreational Vehicle special permit according to the following criteria for a commercial transporter of a recreational vehicle that exceeds the width threshold prescribed under A.R.S. § 28-1093 and R17-6-102, Table 1, but does not exceed the following maximum limit:

~~Vehicle or load description~~	~~A dealer, manufacturer, or transporter hauling or driving a recreational vehicle with appurtenances wider than 8 feet, 6 inches, on behalf of a dealer, manufacturer, or consumer~~
~~Permit option~~	~~For each original permit purchased, up to 24 additional copies of that permit may be issued, all of which are valid for unlimited use by an unlimited number of vehicles throughout a one-year period by the permittee.~~
~~Fee (A.R.S. § 28-1105)~~	~~$360 per year~~

Vehicle or load description	A dealer, manufacturer, or transporter hauling or driving on behalf of a dealer, manufacturer, or consumer a recreational vehicle that exceeds the legal width threshold provided under R17-6-102, Table 1, but is otherwise in conformance with configuration requirements provided under A.R.S. § 28-1093 for excess width attributable to recreational vehicle appurtenances.	
Standard permit fee for weight not exceeding 80,000 pounds (A.R.S. § 28-1105)	Multiple trip: 30-day maximum	$30
	Multiple trip: one year	$360*
*For each original annual permit purchased, the Department may issue up to 24 additional copies of that permit, all of which are valid for unlimited use by the permittee throughout the permitted period for an unlimited number of vehicles.		

B. An applicant for a class ~~B - Type R oversize~~ A - Oversize Recreational Vehicle special permit shall apply to the Department and submit appropriate fees using the application procedure provided under R17-6-103.

C. A permittee or driver of an oversize or overweight vehicle or load shall not access a route listed under R17-6-412, Table 4, unless operating in full compliance with all indicated restrictions and requirements.

R17-6-204. Class C Oversize and Overweight Special Permits - ~~Specified~~ Specific Non-reducible Vehicle, Load, or Combination Over Class A Limits

A. The Department shall issue a single trip class C oversize, overweight, or oversize and overweight special permit ~~according to the following criteria~~ for a ~~specified~~ specific non-reducible vehicle, combination of vehicles, or vehicle and load combination that exceeds a ~~dimension~~ class A oversize or overweight special permit limitation provided under ~~R17-6-201 or as required under R17-6-307(B) and (C)~~ this Article, or a maximum permitted weight computation for overweight axle group weight distribution provided under R17-6-411, according to the following criteria:

Vehicle or load description	A non-reducible vehicle or load that exceeds the dimensions and weights of all other permit classes or when class C operation is proposed on a route further restricted under R17-6-412, Table 4	
Permit option - requires pre-approval by Class C ~~Maintenance~~ Statewide Permit Services	Single trip only	Load shall be specifically described by the applicant as provided under subsection (C) of this Section and A.R.S. § 28-1104
Standard permit fees (A.R.S. § 28-1105)	Oversize only Overweight only Oversize and overweight	$15* $75* $75*
*In addition to the standard permit fees above, the Department shall collect the following class C review and analysis fee(s) as applicable to the applicant's proposed vehicle and load configuration:		

Class C review and analysis fee (A.R.S. § 28-1103)	Height or width 18 feet or less	$15
	Height or width over 18 feet	$25
Engineering analysis (A.R.S. § 28-1103)	Prepared by non-ADOT engineer, and reviewed by ADOT engineer	$75 per 50 mile increment of proposed route
	Prepared by ADOT engineer	$125 per 50 mile increment of proposed route

B. An applicant for a class C oversize or overweight special permit shall:

1. Complete a class C special permit application form provided by the Department and available online at www.azdot.gov;
2. Submit the completed class C special permit application, including all information required under subsection (C) and all appropriate fees, to Class C ~~Maintenance~~ Statewide Permit Services as provided under R17-6-103, R17-6-104, and R17-6-108, as applicable;
3. Contact all applicable utility and cable companies to verify adequate overhead cable and utility line clearances along the proposed route as required under R17-6-308;
4. Obtain an encroachment permit in advance of the proposed transport as provided under 17 A.A.C. 3, Article 5, if constructing a fixed or temporary improvement within ~~a state highway~~ the right-of-way of any route on the State Highway System, or for any activity requiring the temporary use of, or intrusion upon, ~~a state highway~~ the right-of-way of any route on the State Highway System, including a median; and
5. Provide ~~or~~ and arrange for the use of additional traffic control devices appropriate for the proposed transport if the Department requires additional traffic control measures as a condition of permit approval. All additional traffic control devices shall conform to the manual and specifications adopted by the Department ~~under~~ pursuant to A.R.S. § 28-641.

C. A complete class C special permit application for ~~transport of~~ transporting an oversize, overweight, or oversize and overweight vehicle, combination of vehicles, or vehicle and load combination shall:

1. Indicate the starting and ending points of the proposed route;
2. Document the specific overall dimensions of the vehicle with its specified load, to include:
   a. Height,
   b. Length, and
   c. Width;
3. Diagram the vehicle and specified load illustrating all of the following information:
   a. Axle spacing;
   b. Axle weight;
   c. Axle width;
   d. Tires per axle;
   e. Tire width as designated by the manufacturer;
   f. Maximum width to the outside of the axles, excluding any load-induced tire bulge; and
   g. Load weight.

4. Include a comprehensive traffic control plan, as provided under R17-6-108, if the Department requires traffic control measures as a condition of permit approval;
5. Indicate the estimated time needed to change out a power unit or other special equipment if the Department, through detailed analysis and as a condition of permit approval, requires the use of an additional power unit or other special equipment to ensure safe transport of the proposed load. The Department's decision to require an additional power unit or other special equipment shall be based on its consideration of the:
   a. Estimated timing involved with clearing a route after a breakdown;
   b. Expected weather conditions;
   c. Proximity and availability of reserve resources;
   d. Size and weight of the load;
   e. Traffic dynamics of the proposed route; and
   f. Width, grade, and condition of the roads;
6. Include proof of gross weight in the form of a public weighmaster's certificate of weight and measure issued at a certified public scale if required by the Department after twice denying an application for incorrect weights;
7. Include proof of valid registration that complies with the requirements of A.R.S. § 28-2153;
8. Include proof of a valid IFTA license that complies with the requirements of A.R.S. § 28-5742, if applicable; and
9. Include any other applicable requirement provided under R17-6-104.

D. An applicant for a class C oversize or overweight special permit to transport a mobile home shall additionally submit to the Department all appropriate load related information, including:

~~1. Serial numbers assigned to the mobile home; and~~

~~2. Evidence of payment of all applicable ad valorem taxes, as required under A.R.S. § 28-1104, in the form of a 504 tax clearance permit issued by the county in which the mobile home is currently located.~~

1. Manufacturer's name;
2. Brand name or model;
3. Complete serial number assigned; and
4. Evidence of payment of all applicable ad valorem taxes pursuant to A.R.S. § 28-1104, in the form of a Mobile Home Property Tax Clearance 504 (DOR Form 82504) issued by the county in which the mobile home is currently located, if movement of the mobile home is being conducted for a reason other than an original sale, exchange, or lease-purchase to a consumer.

E. A permittee or driver of an oversize or overweight vehicle or load shall not access a route listed under R17-6-412, Table 4, unless operating in full compliance with all indicated conditions and allowances.

~~**F.** The Department shall require a class C special permit for an overweight vehicle or vehicle and load combination heavier than 250,000 pounds or that exceeds the maximum permitted weight computations for overweight axle group weight distribution as provided under R17-6-411.~~

R17-6-205. Class ~~D~~ A - Crane Oversize and Overweight Special Permit - Self-propelled Mobile Crane, Drilling Rig, or Similar Specialty Equipment

A. The Department shall issue ~~an annual~~ a class ~~D~~ A oversize, ~~or~~ overweight, or oversize and overweight special permit according to the following criteria for a ~~specified~~ specific non-reducible self-propelled mobile crane, drilling rig, or similar specialty equipment ~~meeting the dimensional requirements~~ that exceeds a dimension provided under R17-6-201, Table 1, ~~without exceeding~~ but does not exceed the maximum permitted weight computations for overweight axle group weight distribution as provided under R17-6-411, or any of the following maximum limits:

~~Vehicle or load description~~	~~A self-propelled mobile crane, drilling rig, or similar specialty equipment meeting the dimensional requirements provided under R17-6-201.~~
~~Permit option~~	~~Multiple trip: one year~~
~~Fee (A.R.S. § 28-1105)~~	~~$600 per year~~

Vehicle or load description	A self-propelled mobile crane, drilling rig, or similar specialty equipment over a threshold dimension provided under R17-6-102, Table 1, to a maximum:	
	Width	14 feet
	Height	16 feet
	Overall length	120 feet
	Weight	250,000 lbs.
Standard permit fee for weight not exceeding 80,000 pounds (A.R.S. § 28-1105)	Single trip: 96-hour maximum	$15
	Multiple trip: 30-day maximum	$30
	Multiple trip: one year	$360
Overweight permit fee for weight exceeding the legal threshold provided under R17-6-102, Table 1, but not exceeding 250,000 pounds (A.R.S. § 28-1105)	Single trip: 96-hour maximum	$75
	Multiple trip: 30-day maximum	$75
	Multiple trip: one year	$600

B. Unless otherwise restricted under R17-6-404 or R17-6-412, Table 4, a permittee or driver of a self-propelled mobile crane, drilling rig, or similar specialty equipment issued a special permit under this Section is eligible for continuous travel if the vehicle does not exceed any of the following dimensions:

1. 11 feet in width;
2. 14 feet 6 inches in height;
3. 10 feet in length of front overhang;
4. 10 feet in length of rear overhang;

5. 120 feet in overall length; or
6. 250,000 pounds.

~~B.~~**C.** An applicant for a class ~~D~~ A - Crane ~~oversize or overweight~~ special permit under this Section shall submit to the Department, with all appropriate fees, an application form provided by the Department that includes all of the following information:

1. Specific dimensions of the vehicle and load combination, including:
   a. A detailed description;
   b. A detailed drawing that illustrates all of the following:
      i. Axle spacing;
      ii. Axle weight;
      iii. Axle width;
      iv. Tires per axle;
      v. Tire width as designated by the manufacturer;
      vi. Maximum width to the outside of the axles, excluding any load-induced tire bulge; and
      vii. Load weight;
   c. A detailed listing of all equipment to be included, such as counterweights, outriggers, boom position, position of boom dolly, etc.; and
   d. A table of loads supplied by the manufacturer listing component and total weights;
2. Proof of gross weight:
   a. For an initial application, a public weighmaster's certificate of weight and measure issued at a certified public scale once the vehicle is equipped and set for highway travel; or
   b. For a renewal application, a certification by the applicant that no dimension has changed and the vehicle does not exceed the originally certified dimensions or weights;
3. Proof of valid registration that complies with the requirements of A.R.S. § 28-2153;
4. Proof of a valid IFTA license that complies with the requirements of A.R.S. § 28-5742 if applicable; and
5. Documentation of any applicable encroachment permit obtained under 17 A.A.C. 3, Article 5, if the applicant must temporarily move any state-owned highway feature as part of a planned transport.

~~C.~~**D.** ~~Conformance to~~ The permittee and driver are responsible for ensuring that all dimensions of a permitted vehicle remain in conformance with all certifications provided to the Department on application for the special permit and that all special permit restrictions ~~and vehicle certification is the sole responsibility of the applicant~~ indicated by the Department on the special permit are followed. Violation of the ~~annual~~ permit in size, weight, length, height, changing the boom position, dolly, or trailer position, or any other restriction ~~stated~~ indicated on the permit shall render the permit invalid and no permit fee or portion thereof will be refunded. ~~Annual permits~~ Special permits are non-transferable and non-refundable.

~~D.~~**E.** A permittee or driver of an oversize or overweight vehicle or load shall not access a route listed under R17-6-412, Table 4, unless operating in full compliance with all indicated restrictions and requirements.

F. A permittee or driver of a vehicle or load transporting under this Section shall comply with all other applicable restrictions provided under Articles 3 and 4 of this Chapter and ensure appropriate escort vehicle accompaniment as provided under R17-6-305 or R17-6-307.

R17-6-206. Class E Oversize and Overweight Special ~~Permits~~ Permit - ~~Reducible~~ Multiple Trailer ~~LCVs~~ LCV or Other Reducible Vehicle and Load Combination

A. The Department shall issue a class E oversize or overweight special permit according to the types and restrictions listed under Table 2 for transporting reducible loads on the National Network using an LCV consisting of a truck, or truck tractor and semitrailer, ~~and~~ with one or more ~~trailers~~ trailing units.

~~1. A person who operates, and a person who causes to be operated, an oversize or overweight special permitted vehicle shall be jointly responsible for meeting all permit requirements; and~~

~~2. A person shall not operate any other trailer configuration or multiple trailer combination under the class E special permit, unless authorized by the Department and specifically indicated on the permit.~~

B. The Department may issue a class E oversize or overweight special permit according to the types and restrictions listed under Table 2 for transporting reducible loads on the National Network using a long single-trailer combination, if the permittee or driver:

1. Uses spread-axle, tridem-axle, or quad-axle configurations to meet the federal bridge formula axle group weight limitations; and
2. Travels on a route authorized by the Department for such vehicle and load configurations as indicated under Table 2.

C. A person shall not operate any other trailer configuration or multiple trailer combination under the class E special permit, unless authorized by the Department and specifically indicated on the permit.

~~**B.**~~**D.** The Department shall issue a class E oversize or overweight special permit for an LCV or other reducible vehicle and load combination only at the following state ports of entry:

1. Page,
2. St. George, or
3. Teec Nos Pos.

~~**C.**~~**E.** An applicant for a class E oversize or overweight special permit shall submit to the Department, with all appropriate fees, an application form provided by the Department that includes all of the following information:

1. Specific dimensions of the vehicle and load combination;
2. Proof of valid registration that complies with the requirements of A.R.S. § 28-2153;
3. Proof of a valid IFTA license that complies with the requirements of A.R.S. § 28-5742, if applicable; and
4. Other information as needed by the Department to issue an appropriate permit, which includes:
   a. Company name;
   b. Company or terminal address;
   c. Company USDOT #;
   d. Company mailing address;
   e. Company contact name, address, telephone number, and fax number or email address;

f. Company representative's name and title; and

g. Specific routes requested.

~~D.~~**F.** The ~~operator~~ permittee or driver of a class E special permitted ~~LCV~~ vehicle and load combination shall comply with the federal bridge formula axle group weight limitations provided under A.R.S. § 28-1100(A)(4) and ~~not exceed the maximum permitted weight computations for overweight axle group weight distribution as provided under R17-6-411 or~~ any other applicable ~~state highway restriction, condition, or allowance~~ State Highway System restrictions, conditions, or allowances provided by the Department under R17-6-412, Table 4.

G. A person who operates, and a person who causes to be operated, an oversize or overweight special permitted vehicle shall be jointly responsible for meeting all permit requirements.

Table 2. Class E LCV or Other Reducible Vehicle and Load Combination Special Permit and Issuance Criteria

~~**LCV Combination - Double**~~ ~~Truck tractor and two trailing units (23 CFR 658, App. C);~~ ~~Truck and one full trailer (A.R.S. § 28-1103); or~~ ~~Truck tractor, semitrailer, and one full trailer (A.R.S. § 28-1103).~~ ~~**LCV Combination - Triple***~~ ~~Truck tractor and three trailing units (23 CFR 658, App. C);~~ ~~Truck, semitrailer, and one full trailer (A.R.S. § 28-1103); or~~ ~~Truck and two trailers (A.R.S. § 28-1103).~~ **LCV Triple-Trailer Combination*** Truck tractor and three trailing units or a truck and two trailing units. **LCV Double-Trailer Combination** Truck tractor and two trailing units, or truck and one trailing unit, exceeding an overall combination length of 65'. **Other Long Reducible Vehicle and Load Combinations** Truck tractor and semitrailer with load exceeding 80,000 pounds using spread-axle, tridem-axle, or quad-axle configurations to meet federal bridge formula axle group weight limitations. (Reducible vehicle and load combinations authorized under: 23 CFR 658.13; 23 CFR 658, App. C; and A.R.S. § 28-1103)	
Route	**Locations Authorized for ~~LCV~~ Travel ~~(A.R.S. § 28-1103 and 23 CFR 658, App. C)~~**
I-15	MP 0.00 (Nevada State Line) to MP 29.40 (Utah State Line)
State 98	MP 294.67 (Junction US 89) to MP 314.67
State 389	MP 0.00 (Utah State Line) to MP 32.60 (Junction US 89A)
US 89	MP 536.99 to MP 556.99 (Utah State Line)
US 89A	MP 579.30 (Junction SR 67) to MP 613.03 (Utah State Line)
US 160	MP 393.57 (Junction US 163 at Kayenta) to MP 470.00 (New Mexico State Line)
US 163	MP 393.52 (Junction US 160 at Kayenta) to MP 416.71 (Utah State Line)
Gross ~~Vehicle~~ Weight of ~~LCV~~ Vehicle and Load Combination	**Permit Duration and Fee (A.R.S. § 28-1105)**
80,001 lbs through ~~111,000~~ 123,500 lbs	Single or 30-Day - $75
80,001 lbs through ~~111,000~~ 123,500 lbs	Annual - $360

~~121,000 lbs for 9 axles; or 123,500 lbs for 10 axles~~	~~Annual - $360~~
~~111,001~~ 123,501 lbs through 129,000 lbs*	Single or 30-Day - $75
~~111,001~~ 123,501 lbs through 129,000 lbs*	Annual - $600
~~*Triple LCVs shall not exceed 123,500 lbs except on I-15.~~	
Maximum Length The overall length of the ~~cargo carrying unit~~ cargo-carrying units of ~~the vehicle~~ a combination of vehicles shall not exceed ~~95~~ 98 feet.	
Limits and Restrictions LCV and long single-trailer combination operation is subject to federal bridge formula B limits and restricted to the right most traffic lane. Operation may be limited by the Department and restricted or prohibited during periods when traffic, weather, or other safety considerations make such operation unsafe or inadvisable. *A triple LCV shall not exceed 123,500 lbs except on I-15.	

R17-6-207. ~~Repealed~~ Suspension of Length Restrictions and Weight Limitations on State Routes and Highways; Forest Products; Emergency Vehicles

A. The Department, after conducting appropriate engineering and traffic review and analysis, may grant temporary relief from any existing length or weight restriction placed on a highway, or otherwise authorize reasonable access to any state or federal highway or route maintained by and under the jurisdiction of the Department by issuance of a special permit as provided under A.R.S. §§ 28-1103 and 28-1104.

B. An applicant for a special permit, issued by the Department as prescribed under subsection (A), shall apply to the Department using the application procedure provided under R17-6-103.

C. A special permit issued by the Department under subsection (A) subjects the permittee to all terms and conditions indicated on the special permit, including the period of time for which the special permit is valid, and may be renewed.

D. To protect life, property, environmental concerns and the economic loss of loads, the Department may issue a special permit under subsection (A) for the operation of an overweight vehicle or vehicle and load combination transporting timber or natural forest products with an overall gross vehicle weight of up to 91,000 pounds, if the vehicle or vehicle and load combination is otherwise within the class A maximum limits prescribed under R17-6-201, and:

1. Configured using at least one tridem axle group appropriately spaced to achieve an overall gross vehicle weight allowance of up to 91,000 pounds;
2. Traveling on an authorized highway or roadway, the maintenance of which is under the jurisdiction of the Department;
3. Operating in the furtherance of an ongoing cooperative effort between the U.S. Forest Service, the Arizona Department of Forestry and Fire Management, county officials, or an Arizona city or town to mitigate the effects of wildfires, correct damages, or improve and otherwise manage forest health by moving or removing natural forest products or biomass;

4. Working to reduce unnecessary fuel loads to safeguard the health, safety, and welfare of visitors to the National Forests and any residents of the surrounding communities by significantly reducing any future possibility of fueling a devastating forest fire; and
5. Complying with all route-specific restrictions, requirements, conditions, and allowances provided under R17-6-412, Table 4.

E. The owner, operator, or driver of an emergency vehicle or emergency response vehicle configured to carry excess weight, shall contact Class C Statewide Permit Services for a route clearance if the owner, operator, or driver of the vehicle or apparatus:

1. Anticipates that access to a non-Interstate highway or route will frequently be needed to address emergencies in rural areas of this state where access to or from an Interstate highway is not readily available; or
2. Requires repeated access to a bridge or route identified by the Department under R17-6-412, Table 4, or appropriate highway signage, as having insufficient capacity to carry such excess weight.

R17-6-208. ~~Class G Overwidth Special Permits - Specified Vehicle or Combination with Reducible Load Over Legal Width~~ Repealed

~~**A.** The Department shall issue an annual, 30-day, or single trip class G overwidth special permit according to the following criteria for a specified vehicle, or vehicle combination, with a reducible load that exceeds only the width threshold provided under R17-6-102, Table 1, but does not exceed the following maximum limit:~~

~~Vehicle or load description~~	~~A specified reducible load that exceeds only the legal width threshold provided under R17-6-102, Table 1, but does not exceed 10 feet in width~~	
~~Permit option~~	~~Single trip: 96-hour maximum~~	
	~~Multiple trip: 30-day maximum~~	
	~~Multiple trip: one year~~	
~~Fee (A.R.S. § 28-1105)~~	~~Single trip~~	~~$15~~
	~~Multiple trip, 30 day~~	~~$30~~
	~~Multiple trip, one year~~	~~$360~~

~~**B.** An applicant for a class G overwidth special permit shall apply to the Department and submit appropriate fees using the application procedure provided under R17-6-103.~~

~~**C.** A permittee or driver of an oversize or overweight vehicle or load shall not access a route listed under R17-6-412, Table 4, unless operating in full compliance with all indicated restrictions and requirements.~~

R17-6-209. Class ~~H Overwidth~~ A - Watercraft Special Permit - ~~Specified~~ Specific Vehicle and Overwidth Watercraft Load Combination

A. The Department shall issue an annual class ~~H overwidth~~ A - Watercraft special permit according to the following criteria for multiple trips of a ~~specified~~ specific vehicle and overwidth watercraft load combination that exceeds the width threshold established under A.R.S. § 28-1093 and R17-6-102, Table 1:

Vehicle or load description	~~Applicable only to a specified watercraft load~~ A specific vehicle combination transporting an overwidth watercraft load that is currently registered with the Arizona Game & Fish Department or the U.S. Coast Guard (as applicable), ~~that~~ is no ~~wider~~ more than 10 feet in width, and is within all other threshold dimensions provided under R17-6-102, Table 1
Permit option	Multiple trip: one year
Fee (A.R.S. § 28-1103)	$45

B. An applicant for an annual class ~~H overwidth watercraft~~ A - Watercraft special permit shall apply to the Department and submit appropriate fees using the application procedure provided under R17-6-103.

C. In addition to the application procedure provided under R17-6-103, an applicant for an annual class ~~H overwidth watercraft~~ A - Watercraft special permit shall submit to the Department proof of a valid watercraft registration or assigned watercraft registration number issued by the Arizona Game and Fish Department or U.S. Coast Guard.

D. A permittee or driver of an oversize or overweight vehicle or load shall not access a route listed under R17-6-412, Table 4, unless operating in full compliance with all indicated restrictions and requirements.

~~R17-6-413.~~ R17-6-210. Page-Lake Powell Area Houseboat Transport Provisions

A. A permit applicant shall use the procedures under this Section to apply for an extended approval class C special permit to transport a houseboat of the dimensions specified under subsection (C) on a highway listed under Table 5.

B. A permit applicant shall apply for a permit under this Section at the following ~~Department field office~~ Arizona Port of Entry location:

Page Port of Entry
US 89 MP 551
P.O. Box 1807
Page, AZ 86040
Telephone: (928) 645-3269
~~Fax: (928) 645-9360~~

C. An extended approval class C special permitted vehicle with at least one front and one rear escort vehicle may operate on a highway listed under Table 5 during daylight hours as provided under R17-6-401, including any weekday, weekend, or holiday, if it does not exceed dimensions as follows:

1. 16 feet 6 inches in width;
2. 25 feet in height;
3. 120 feet in length;
4. 150,000 pounds; or
5. Axle weight limits listed in Tables 3.01 through 3.09.

D. An extended approval class C special permitted vehicle and load that exceeds 17 feet in height shall have a front escort with a height pole.

E. For an extended approval class C special permitted vehicle and load that exceeds 14 feet in width, a permittee or driver shall ensure an appropriate level of traffic control at the Glen Canyon Bridge on US 89 by closing access to the bridge at each end and at the visitor center driveway.

F. If a permit applicant seeks to transport outside the requirements of this Section, the permit applicant shall apply for a class C special permit according to the procedures provided under R17-6-204.

G. For the purposes of this Section, and A.R.S. § 28-1144(B), the general term "houseboat" encompasses all large non-specific and non-reducible watercraft models transported by the special permit holder, including a yacht.

Table 5. Page-Lake Powell Area Highways

Route	**Location** (MP = Milepost)
State Route 98	MP 299.50 (Junction BIA 22, Antelope Canyon); to MP 294.67 (End of route at Junction US 89)
U.S. Highway 89	MP 546.19 (Junction SR 98); to MP 556.99 (Utah State Line)

R17-6-211. ~~Western Regional Permit~~ Repealed

~~**A.** The Department shall issue a western regional permit for transport of a specified vehicle, combination of vehicles, or vehicle and load combination meeting specific non-reducible size and weight criteria established under the Western Regional Agreement for transport in Arizona and any other jurisdiction that is a party to the "Western Regional Agreement for the Issuance of Permits for Overweight and/or Oversize Vehicles and/or Loads Involved in Interstate Travel." The western regional permit eliminates the need to obtain a separate permit for each jurisdiction.~~

~~**B.** An applicant is eligible for the western regional permit provided under subsection (A), if the applicant's vehicle, combination of vehicles, or vehicle and load combination meets all of the following criteria:~~

~~1. Non-reducible;~~

~~2. Specifically described;~~

~~3. Width is 14 feet or less;~~

~~4. Height is 14 feet or less;~~

~~5. Length is 110 feet or less;~~

~~6. Overall gross weight is 160,000 pounds or less;~~

~~7. 600 pounds per inch of tire width;~~

~~8. A minimum of five axles; and~~

~~9. The weights of any group of axles are determined using the lesser of the vehicle weights provided by the tables in the Western Regional Manual or the following:~~

~~a. 21,500 pounds per single axle;~~

~~b. 43,000 pounds per tandem axle group; or~~

~~c. 53,000 pounds per tridem axle group (wheel base is more than eight feet but not more than 13 feet).~~

~~**C.** An applicant with a vehicle, combination of vehicles, or vehicle and load combination meeting all eligibility criteria provided under subsection (B), may apply for a western regional permit by completing, and submitting to the Department, a western regional permit application along with:~~

~~1. Proof of valid registration in compliance with A.R.S. § 28-2153;~~

~~2. Proof of a valid IFTA license in compliance with A.R.S. § 28-5742, if applicable; and~~

~~3. All applicable fees calculated as provided under the fee schedules located in the Western Regional Manual maintained at the Arizona Central Commercial Permits Office or Ports of Entry.~~

~~**D.** The Department shall issue, no more than five days before its effective date, a western regional permit valid for a period of five working days.~~

~~**E.** The Department, at the request of a permit holder, may extend the western regional permit's period of validity for up to five days, if completion of the trip is precluded by weather, road conditions, or mechanical failure. An extension authorized by the Department under this Section shall be approved:~~

~~1. By signature of an authorized ECD agent,~~

~~2. By telephone in an emergency situation, or~~

~~3. By authorization of the Arizona Central Commercial Permits office.~~

R17-6-212. Class C Overweight, or Oversize and Overweight, Special Permit - Tridem Axle Group Configurations

A. The Department may issue a single trip class C overweight, or oversize and overweight, special permit for ~~tridem axle group configurations~~ a specific non-reducible vehicle, combination of vehicles, or vehicle and load combination that exceeds the maximum permitted weight computations for overweight axle group weight distribution as provided under R17-6-411, if the vehicle, combination of vehicles, or vehicle and load combination is equipped with at least one tridem axle group configured as provided under subsection (C) to achieve a maximum permitted weight of 60,000 pounds per tridem axle group subject to the ~~specific~~ routes and restrictions provided under Table ~~6~~ 4 ~~and the maximum permitted weight computations provided under Table 7~~.

B. An applicant for a single trip class C overweight, or oversize and overweight, special permit for tridem axle group configurations shall apply to the Department using the application procedure provided under R17-6-103, and include the $75 standard permit fee with the $15 class C review and analysis fee as provided under R17-6-204.

C. The single trip ~~Class~~ class C overweight, or oversize and overweight, special permit for tridem axle group configurations is ~~restricted to~~ available only for a vehicle, combination of vehicles, or vehicle and load combination equipped with at least one tridem axle group configured in conformance with the following criteria:

1. A minimum of four tires per ~~tridem~~ axle ~~group~~, or two 14-inch wide tires per axle in each tridem axle group;
2. A minimum distance of eight feet out-to-out axle width for each tridem axle group;
3. A minimum ~~of eight feet~~ distance of nine feet, and a maximum distance of 14 feet, between the center of the first axle and the center of the third axle of each tridem axle group, except as provided under Table 7;

4. ~~A maximum of two tridem axle groups, or a maximum of one tandem axle group with one tridem axle group, spaced at least 25 feet between the center of the last axle of the front group and the center of the first axle of the rear group, with no other axles in between the two groups~~ A minimum distance of 13 feet 7 inches between the center of the front steering axle and the center of the first axle of any consecutive tridem or tandem axle group, with no other axles between; and
5. ~~A maximum distance of 12 feet between the center of the first axle and the center of the third axle of each tridem group~~ A minimum distance of 14 feet 1 inch between any two consecutive tridem or tandem axle groups, measured from the center of the last axle of the forward axle group to the center of the first axle of the next axle group, with no other axles between.

D. An applicant with a vehicle, combination of vehicles, or vehicle and load combination using a tridem axle group that cannot be configured to meet the minimum distance requirement of nine feet between the center of the first axle and the center of the third axle, as provided under subsection (C)(3), may apply to the Department for this special permit as provided under subsection (B), if the vehicle, combination of vehicles, or vehicle and load combination is otherwise configured in conformance with the criteria provided under subsection (C) and meets the reduced weight calculations provided under Table 7 for axle group spacing between eight and nine feet.

~~**D.**~~**E.** A tridem axle group may be used in combination with other non-tridem axle groups ~~only~~ if the non-tridem axle groups do not exceed the maximum permitted weight computations for overweight axle group weight distribution provided under R17-6-411.

~~**E.**~~**F.** A permit applicant with a vehicle, combination of vehicles, or vehicle and load combination exceeding 14 feet in width, 16 feet in height, 120 feet in length, ~~140,000~~ 250,000 lbs overall gross vehicle weight, or any ~~other~~ dimension specified above shall continue to follow the Department's existing ~~Class~~ class C permit application procedures as provided under R17-6-204.

Table 6. ~~**Class C Overweight, or Oversize and Overweight, Special Permit Routes and Restrictions for Tridem Axle Group Configurations**~~ **Repealed**

~~The single trip class C overweight, or oversize and overweight, special permit for tridem axle group configurations may be issued by the Department for travel on State Route 68, U.S. Route 93 from milepost 67 (junction with State Route 68) to milepost 70 (junction with I-40), and Interstates 10, 19, and 40 subject to the following conditions:~~

~~**Route #**~~	~~**Milepost #**~~	~~**STR #**~~	~~**Structure Name**~~	~~**Restrictions**~~
~~I-10 EB~~	~~250.66~~	~~391~~	~~Rillito Creek Bridge~~	~~Travel in the right most lane~~
~~I-10 EB~~	~~267.65~~	~~1044~~	~~Earp Wash Tributary Bridge~~	~~Travel in the right most lane~~
~~I-10 EB~~	~~277.46~~	~~463~~	~~Wash Bridge~~	~~Travel in the right most lane~~
~~I-10 EB~~	~~312.77~~	~~574~~	~~Sibyl Road TI OP~~	~~Exit and bypass~~
~~I-10 EB~~	~~355.58~~	~~429~~	~~Monk Draw Bridge~~	~~Exit at 352 and merge at 355~~
~~I-10 WB~~	~~249.49~~	~~390~~	~~Canada Del Oro Bridge~~	~~Travel in the right most lane~~
~~I-10 WB~~	~~267.65~~	~~1045~~	~~Earp Wash Tributary Bridge~~	~~Travel in the right most lane~~
~~I-10 WB~~	~~299.14~~	~~73~~	~~Cornfield Canyon Bridge~~	~~Travel in the right most lane~~

~~I 10 WB~~	~~312.77~~	~~575~~	~~Sibyl Road TI OP~~	~~Exit and bypass~~
~~I 10 WB~~	~~389.38~~	~~210~~	~~Island Wash Bridge~~	~~Travel in the right most lane~~
~~I 40 EB~~	~~224.70~~	~~321~~	~~Babbitt Tank Wash Bridge~~	~~Travel in the right most lane~~
~~I 40 WB~~	~~13.61~~	~~377~~	~~Franconia Wash Bridge~~	~~Travel in the right most lane~~
~~I 40 WB~~	~~21.01~~	~~1312~~	~~Flat Top Wash Bridge~~	~~Travel in the right most lane~~
~~I 40 WB~~	~~21.84~~	~~364~~	~~Happy Jack Wash Bridge~~	~~Travel in the right most lane~~
~~I 40 WB~~	~~23.56~~	~~365~~	~~Mackenzie Wash Bridge~~	~~Travel in the right most lane~~
~~I 40 WB~~	~~144.31~~	~~440~~	~~Ash Fork ATSFRR OP~~	~~Travel in the right most lane~~
~~I 40 WB~~	~~148.91~~	~~441~~	~~Johnson Canyon Bridge~~	~~Travel in the right most lane~~
~~I 40 WB~~	~~278.03~~	~~459~~	~~Tanner Wash Bridge~~	~~Travel in the right most lane~~
~~EB = Eastbound, I = Interstate, OP = Overpass, STR # = Structure #, TI = Traffic Interchange, WB = Westbound,~~				

Table 7. Maximum Permitted Weight Computations: <u>Proportionally Reduced Weight Computations for</u> Tridem Axle Group Configurations <u>Measuring Less Than 9 Feet</u>

	~~Distance between the center of the first axle and the center of the third axle of a tridem group:~~											
	~~0”~~	~~1”~~	~~2”~~	~~3”~~	~~4”~~	~~5”~~	~~6”~~	~~7”~~	~~8”~~	~~9”~~	~~10”~~	~~11”~~
~~8’~~	~~57,960~~	~~58,061~~	~~58,161~~	~~58,262~~	~~58,363~~	~~58,463~~	~~58,564~~	~~58,664~~	~~58,765~~	~~58,866~~	~~58,966~~	~~59,067~~
~~9’~~	~~59,168~~	~~59,268~~	~~59,369~~	~~59,469~~	~~59,570~~	~~59,671~~	~~59,771~~	~~59,872~~	~~59,973~~	~~60,000~~	~~60,000~~	~~60,000~~
~~10’~~	~~60,000~~	~~60,000~~	~~60,000~~	~~60,000~~	~~60,000~~	~~60,000~~	~~60,000~~	~~60,000~~	~~60,000~~	~~60,000~~	~~60,000~~	~~60,000~~
~~11’~~	~~60,000~~	~~60,000~~	~~60,000~~	~~60,000~~	~~60,000~~	~~60,000~~	~~60,000~~	~~60,000~~	~~60,000~~	~~60,000~~	~~60,000~~	~~60,000~~
~~12’~~	~~60,000~~											

~~Computation Formula: Weight = 1.5 X 700 (L + 40)~~

~~(L = Distance between the center of the front axle and the center of the rear axle of a given group.)~~

~~Legend:~~

~~Eight tires per axle or four 14-inch wide tires. Value is the formula weight plus 15% up to a maximum 60,000 lbs.~~

<u>Maximum allowable tridem axle group weights calculated in proportion with the criteria provided under R17-6-212 where:</u>

<u>L = Distance between the center of the front axle and the center of the third axle of any tridem group within a space of 8’ 0” to 8’ 11”.</u>

	<u>L =</u>	**<u>0”</u>** →	**<u>1”</u>**	**<u>2”</u>**	**<u>3”</u>**	**<u>4”</u>**	**<u>5”</u>**	**<u>6”</u>**	**<u>7”</u>**	**<u>8”</u>**	**<u>9”</u>**	**<u>10”</u>**	**<u>11”</u>**
<u>A</u>	**<u>8’</u>**	<u>57,960</u>	<u>58,061</u>	<u>58,161</u>	<u>58,262</u>	<u>58,363</u>	<u>58,463</u>	<u>58,564</u>	<u>58,664</u>	<u>58,765</u>	<u>58,866</u>	<u>58,966</u>	<u>59,067</u>

ARTICLE 3. SAFETY REQUIREMENTS

R17-6-301. General Safety Requirements

In addition to the provisions of this Article, a permittee and a driver of an oversize or overweight vehicle permitted under this Chapter, or a person or entity exempt under R17-6-102(D), shall comply with all federal motor carrier safety regulations incorporated by the Department under 17 A.A.C. Chapter 5, Article 2, as applicable to a motor carrier operating in Arizona.

R17-6-302. Warning Flag Requirements

A. Specifications. Each warning flag attached to an overwidth or overlength vehicle or load shall be cloth or plastic at least 18 inches square and red or fluorescent orange in color.

B. Display. A permittee or driver of an overwidth or overlength envelope or special permitted vehicle, combination of vehicles, or vehicle and load combination shall display warning flags applicable to the permittee's vehicle or vehicle and load configuration as indicated under Illustration 1.

Illustration 1. Warning Flag Configurations

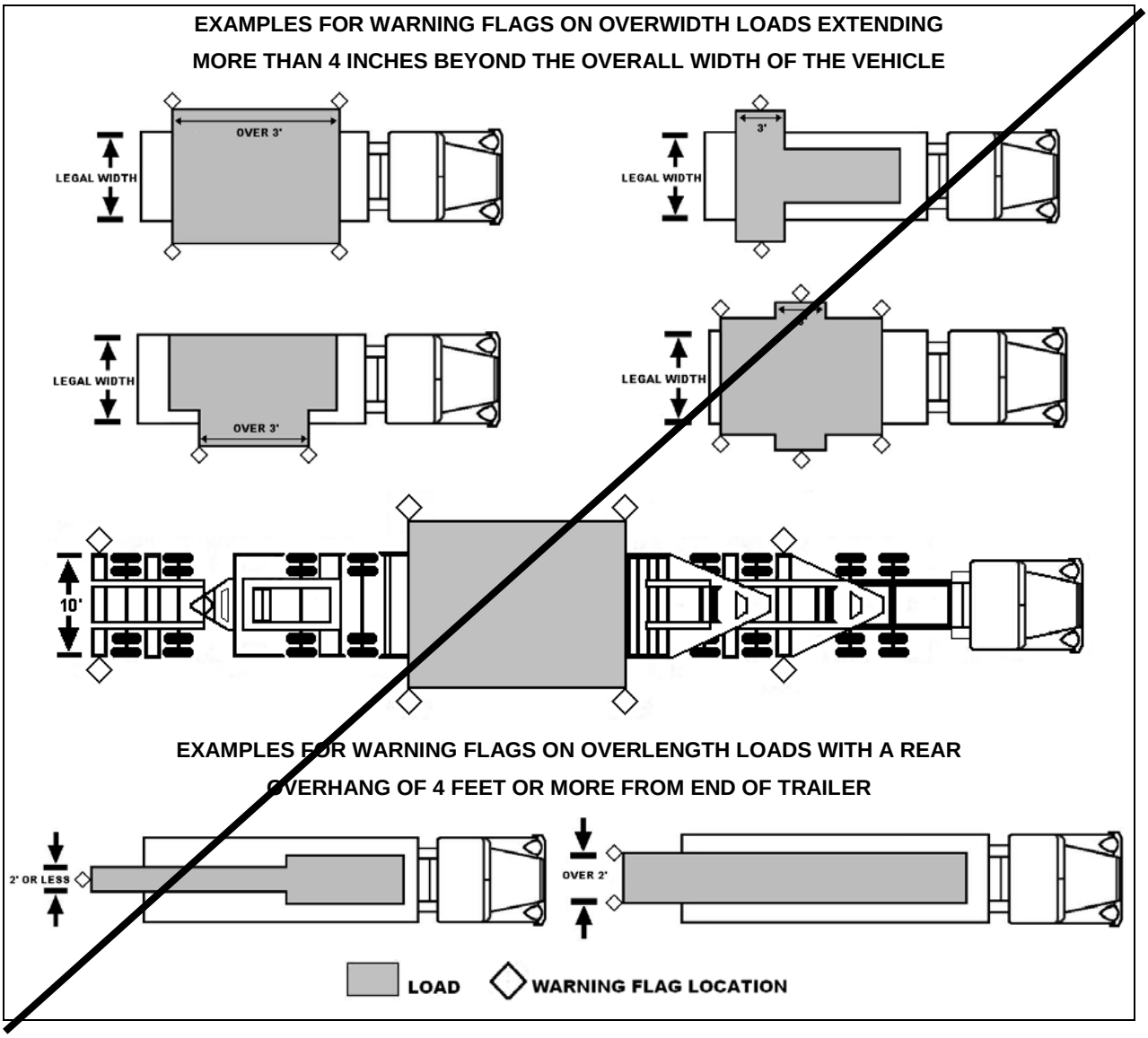

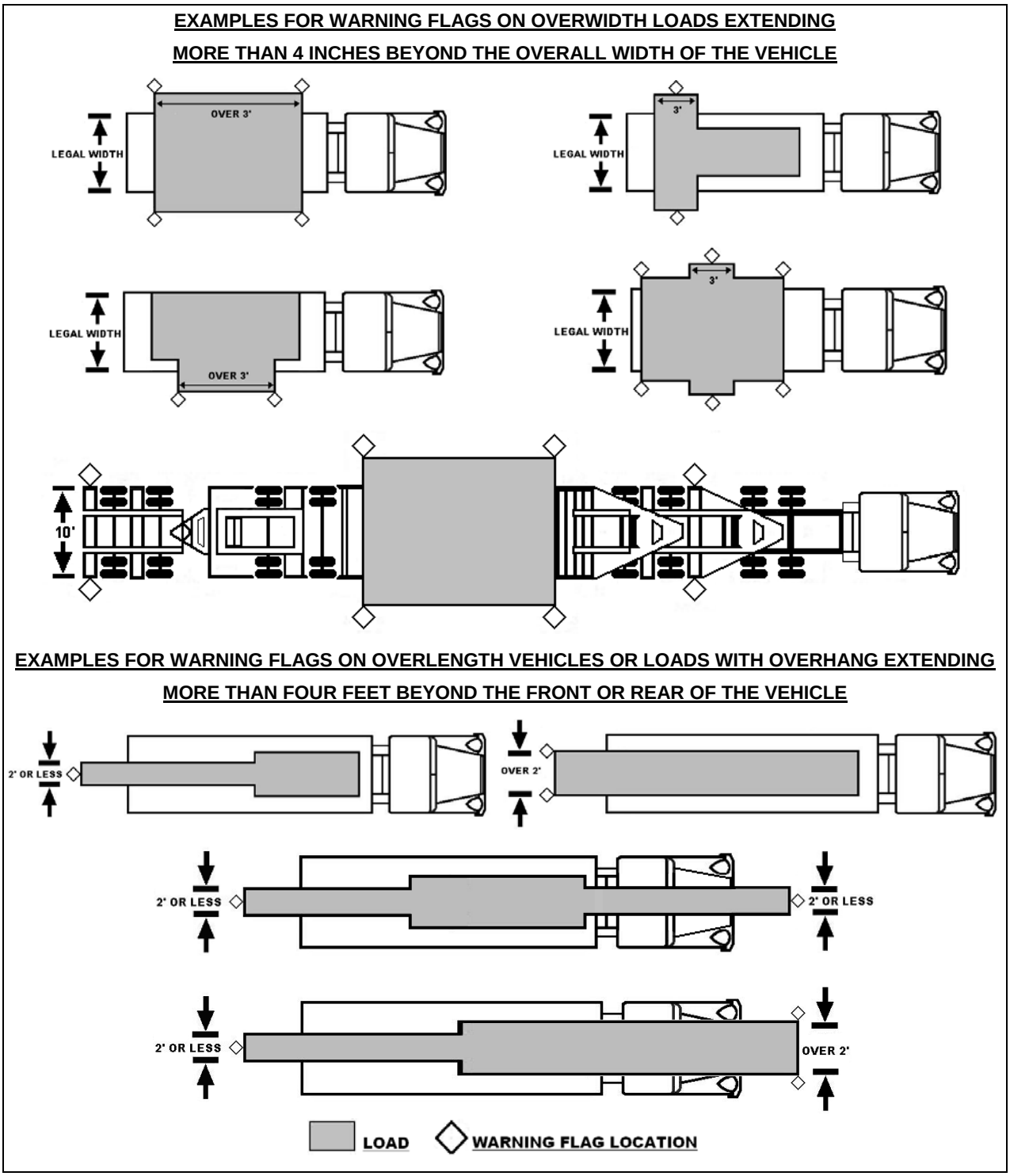

R17-6-303. Sign Requirements

A. A permittee or driver shall ensure that an oversize or overweight vehicle or load displays an "OVERSIZE LOAD" sign if the vehicle or load is nine feet or more in width.

B. A permittee or driver shall display an "OVERSIZE LOAD" sign on any oversize or overweight envelope or special permitted vehicle or load, even if not specified under subsection (A) ~~if~~, when necessary to ensure maximum visibility for public safety.

C. An "OVERSIZE LOAD" sign shall meet construction specifications provided under Illustration 2 at a minimum.

D. A permittee or driver shall display required "OVERSIZE LOAD" signs that are:

1. Mounted to the front or roof of the power unit,
2. Mounted to the rear of the load or loaded vehicle,
3. Parallel with the road surface from side-to-side,
4. Readable from left to right, and
5. Clearly visible from the ~~vehicle's~~ front and rear of the loaded vehicle.

E. If a permittee or driver required under this Section to display an "OVERSIZE LOAD" sign is not transporting an oversize or overweight load, the permittee or driver shall ensure that each sign is not visible to traffic.

Illustration 2. "OVERSIZE LOAD" Sign

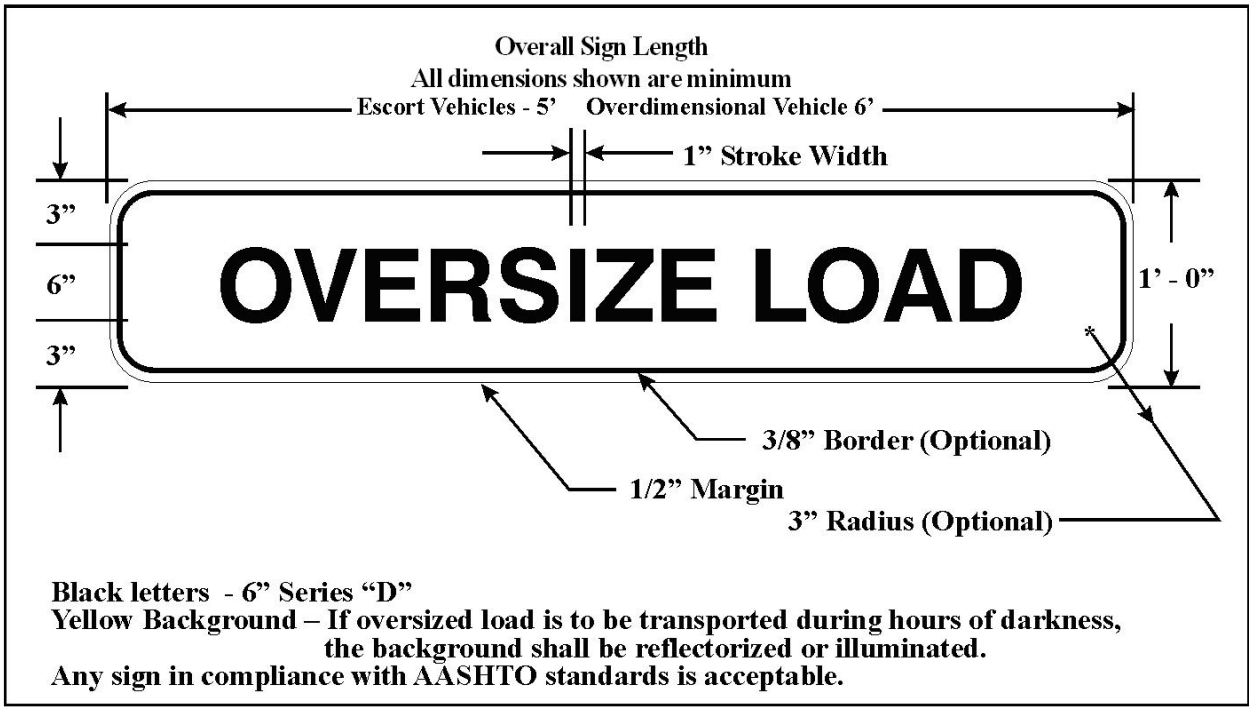

R17-6-304. Safety Lighting Device Requirements

A. A permittee or driver of an oversize or overweight vehicle or load shall:

1. Comply with all applicable lighting equipment requirements under A.R.S. Title 28, Chapter 3, Article 16, and 49 CFR 393 as incorporated by reference under A.A.C. R17-5-202; and
2. Operate with the lighting equipment illuminated ~~as prescribed under A.R.S. §§ 28-922 and 28-935~~ at the times specified under A.R.S. § 28-922.

B. A permittee or driver of a vehicle transporting a load that projects more than four inches beyond the overall width of the vehicle shall attach safety lighting during nighttime operation according to the requirements provided under Illustration 4, and R17-6-307, that most closely correspond to the permittee's or driver's vehicle and load configuration.

C. A permittee or driver of an oversize vehicle or load that projects ~~more than three feet in front overhang, or~~ more than four feet in front or rear overhang, shall attach safety lighting during nighttime operation according to the requirements provided under Illustration 4, and R17-6-307, that most closely correspond to the permittee's or driver's vehicle and load configuration.

Illustration 4. Safety Lighting Configurations

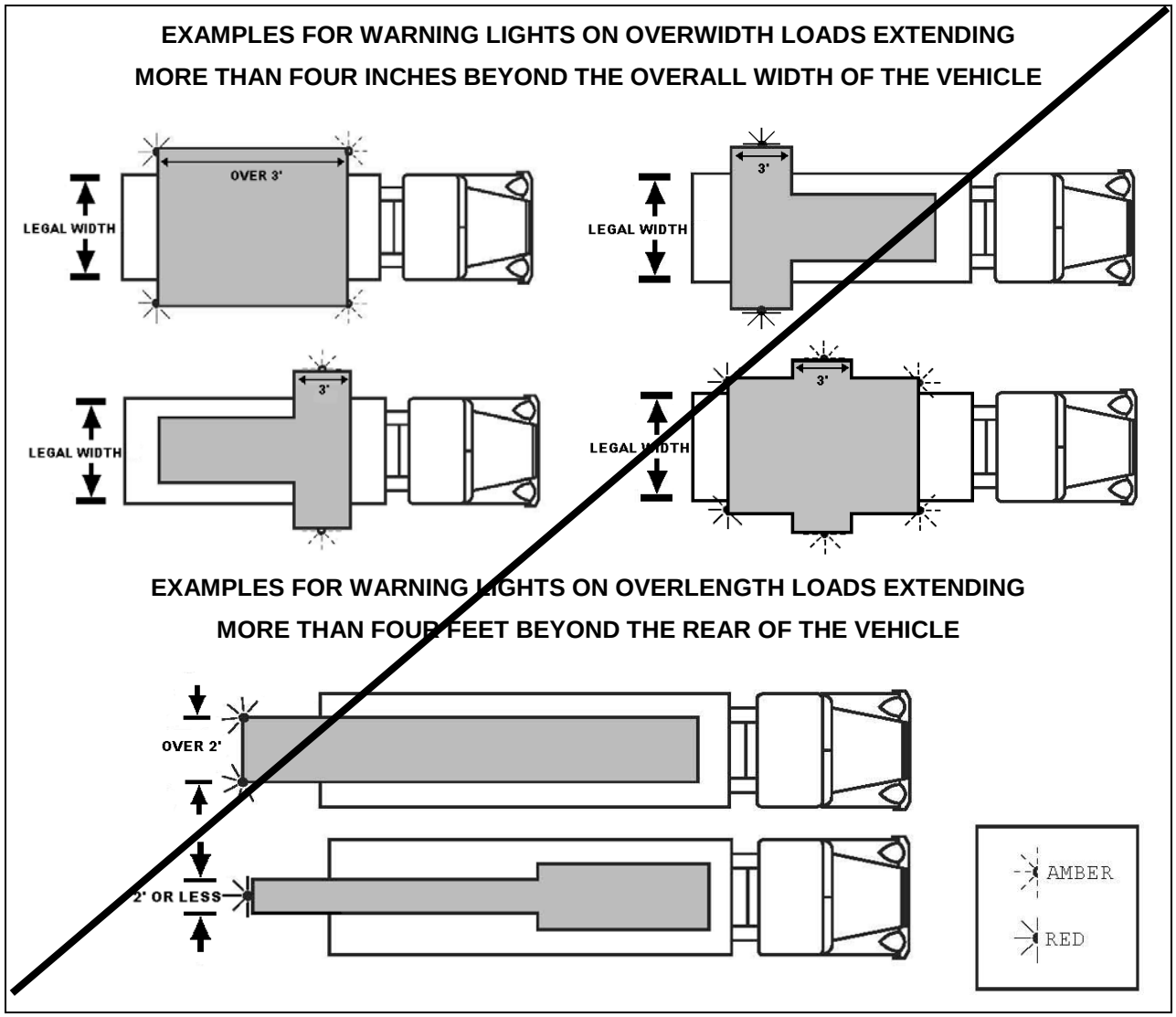

EXAMPLES FOR WARNING LIGHTS ON OVERWIDTH LOADS WITH OVERHANG EXTENDING MORE THAN FOUR INCHES BEYOND THE OVERALL WIDTH OF THE VEHICLE

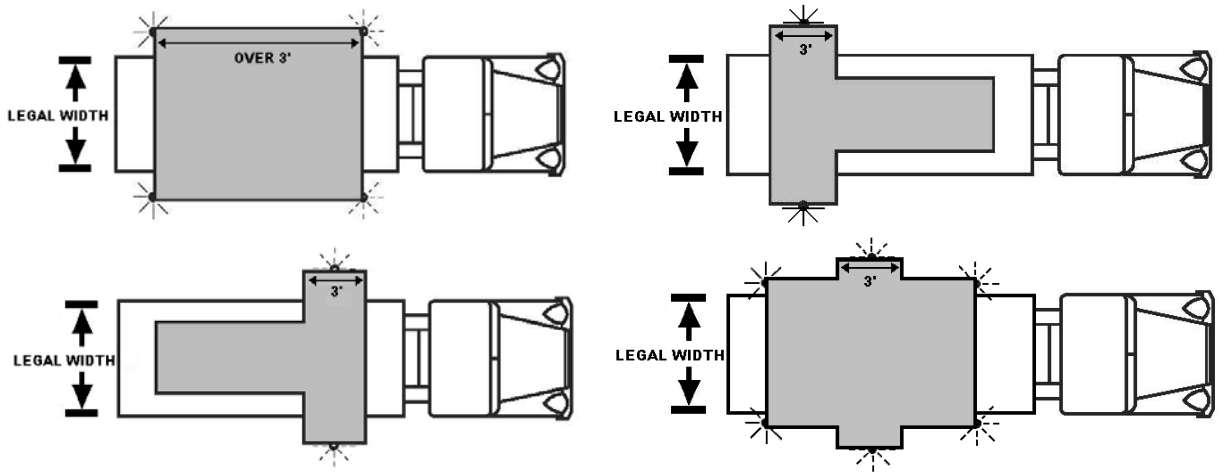

EXAMPLES FOR WARNING LIGHTS ON OVERLENGTH VEHICLES OR LOADS WITH OVERHANG EXTENDING MORE THAN FOUR FEET BEYOND THE FRONT OR REAR OF THE VEHICLE

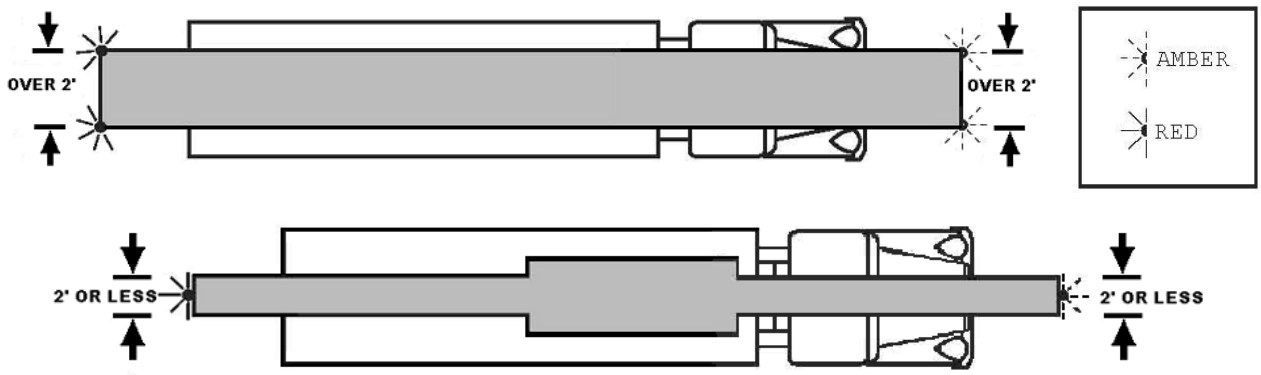

R17-6-305. Escort Vehicles

A. Service requirement.

1. A permittee transporting an oversize or overweight vehicle or load shall use all escort vehicles required by the Department as a condition of envelope or special permit issuance under this Chapter.
2. The Department shall determine whether one or more escort vehicles must accompany an oversize or overweight envelope or special permitted vehicle by considering the following in relation to the proposed transport and route:
   a. Roadway dynamics, including surface condition, grade, width, and height limitations;
   b. Overall dimensions of the vehicle and load;
   c. Need for frequent stops;
   d. Concern for public safety; and
   e. Time of transport.

3. According to the criteria applicable under subsection (A)(2), the Department shall require two or more oversize or overweight envelope or special permitted vehicles traveling together to be accompanied by at least one escort vehicle per load.

B. Vehicle, operator, and equipment requirements.

1. A vehicle qualifies as an escort vehicle if it:
   a. Is a passenger car or two-axle truck operating as a single unit,
   b. Is currently registered, and
   c. Meets insurance requirements as provided by law.
2. An escort vehicle operator, except for a law enforcement escort, while in service under this Chapter shall:
   a. Meet all requirements under A.R.S. § 28-1110, and maintain certification through a program that meets the escort vehicle operator training and certification standards of the Commercial Vehicle Safety Alliance or an equivalent program, whether in this state or another state, that meets the same objectives;
   b. Carry in the escort vehicle the same emergency equipment required for a truck, truck tractor, or bus under A.R.S § 28-960 and 49 CFR 393.95, which shall include;
      i. Fire extinguishers;
      ii. Warning devices for stopped vehicles; and
      iii. Emergency staff-mounted warning flags;
   c. Display an "OVERSIZE LOAD" sign:
      i. Constructed for escort vehicles as provided under R17-6-303, Illustration 2;
      ii. Mounted above the vehicle's roofline and visible to approaching traffic from the front and rear;
      iii. Accompanied by two flags, one mounted on each side of the oversize load sign; and
      iv. Concealed when not in use; and
   d. Ensure continuous communication by two-way radio:
      i. Capable of transmitting and receiving a minimum of 1/2 mile; and
      ii. Compatible with the two-way radios used by the driver of the escorted vehicle, law enforcement escorts, and all other accompanying escort vehicles.

C. Operation.

1. Lighting requirement. While in service, an escort vehicle operator shall maintain continuous illumination of headlights and overhead warning lights as prescribed under A.R.S. § 28-947.
2. Lead and follow distance. An escort vehicle operator shall maintain a lead or follow distance from an escorted vehicle that generally does not exceed 1,500 feet on an open state highway or 250 feet in an urban setting. When determining the appropriate lead or follow distance, an escort vehicle operator shall:
   a. Consider traffic density, road conditions, road type, speed, and type of load;
   b. Ensure constant radio communication with all escorts and the escorted vehicle; and
   c. Maintain visual contact with the escorted vehicle at all times.
3. Stop provisions at an intersection with a traffic control signal.

a. When an oversize or overweight envelope or special permitted vehicle is required to stop, the lead-escort vehicle operator shall proceed through the intersection and stop safely off the roadway. The lead-escort vehicle operator shall resume an appropriate lead distance as soon as is safely possible.

b. When a following-escort vehicle is required to stop, the ~~operator~~ driver of ~~an~~ the oversize or overweight envelope or special permitted vehicle shall proceed without stopping. The following-escort vehicle operator shall resume an appropriate following distance behind the oversize or overweight envelope or special permitted vehicle as soon as is safely possible ~~after clearing an~~ when clear of the intersection.

R17-6-306. Traffic Control Provisions

A. The Department may require additional traffic control by a uniformed certified law enforcement officer to ensure highway safety. The Department shall consider the criteria under R17-6-305(A) when determining the need for additional traffic control.

B. If the Department requires a law enforcement escort under R17-6-412, Table 4, or as necessary to promote public safety, the permittee or driver of the oversize or overweight envelope or special permitted vehicle, combination of vehicles, or vehicle and load combination shall:

1. Contact the Arizona Department of Public Safety at least 12 hours before transport to request the appropriate number of uniformed certified law enforcement escorts required for the permitted activity; and
2. Ensure continuous two-way radio communication during transport with all law enforcement and other escort vehicles required to accompany the permitted vehicle under R17-6-305 and R17-6-307.

C. If the Arizona Department of Public Safety is unable to provide the appropriate law enforcement escorts requested as provided under subsection (B), the permittee or driver of an oversize or overweight envelope or special permitted vehicle, combination of vehicles, or vehicle and load combination may use any uniformed certified law enforcement escorts if at least one officer is certified for enforcement of the Federal Motor Carrier Safety Regulations of the U.S. Department of Transportation's Federal Motor Carrier Safety Administration.

R17-6-307. Projecting ~~Load or~~ Vehicle or Load; Escort Requirements

A. The Department shall ~~require~~ issue a class A special permit, as required under Section R17-6-201, for transporting a vehicle or load ~~or vehicle~~ that projects from either side of the vehicle:

1. Two feet or less, if the projecting portion of the vehicle or load ~~or vehicle~~ has a thickness of less than 12 inches; or
2. Three feet or less, if the projecting portion of the vehicle or load ~~or vehicle~~ has a thickness of 12 inches or more.

B. The Department shall ~~require~~ issue a class C special permit, as required under Section R17-6-204, for transporting a vehicle or load that projects from either side of the vehicle:

1. More than two feet, if the ~~height of the~~ projecting portion of the vehicle or load has a thickness of less than 12 inches; or
2. More than three feet, if the ~~height of the~~ projecting portion of the vehicle or load has a thickness of 12 inches or more.

C. ~~A~~ Except as provided under R17-6-404, and unless the Department requires additional escort vehicles under R17-6-306 or R17-6-412, Table 4, a permittee or driver of a ~~projecting~~ vehicle or load transporting under this Chapter shall have escort vehicle accompaniment as follows:

~~1. A front escort vehicle if the front load projection is longer than 20 feet, or~~

~~2. A rear escort vehicle if rear projection is longer than 20 feet.~~

1. Over 11 to 14 feet in width requires a rear escort;
2. Over 14 to 16 feet in width requires a front and rear escort;
3. Over 15 feet in height requires a front escort with a height pole;
4. Over 20 feet in length of front overhang requires a front escort; and
5. Over 20 feet in length of rear overhang requires a rear escort.

D. A permittee or driver of a projecting vehicle or load with more than a four foot front or rear overhang shall:

1. Attach warning flags to the vehicle or load as provided under R17-6-302 and Illustration 1, for daylight operation; or
2. Attach safety lighting to the load as provided under R17-6-304 and Illustration 4, for nighttime operation.

E. An integral component or components removed from a loaded primary object may be transported on the same vehicle bearing the primary object provided the component ~~does~~ or components do not cause the hauling vehicle to exceed a size or weight permitted for the primary object.

R17-6-308. Permittee or Driver Obligation to Notify Utility Companies of Overheight Transport

A permittee or driver shall notify a responsible utility company of possible disturbance or damage, as provided under A.R.S. § 40-360.43, if overhead utility lines extend across a proposed route and the permitted vehicle or load exceeds 16 feet in height or any route-specific height restriction provided under R17-6-412, Table 4.

ARTICLE 4. TRANSPORT PROVISIONS

R17-6-401. General Highway Operations

A. A permittee or driver of an oversize or overweight envelope or special permitted vehicle, combination of vehicles, or vehicle and load combination shall:

1. Operate no earlier than one-half hour before sunrise and no later than one-half hour after sunset, exact daily times as defined under R17-6-101, except as provided under this Article, or unless the Department otherwise:
   a. Restricts operation on a highway, or
   b. Grants permit-specific alternate operation hours other than those listed under this subsection as a necessary condition to maintain highway safety;
2. Operate in the rightmost lane of a multi-lane highway if indicated on the envelope or special permit except to overtake and pass another vehicle; and
3. Maintain a minimum distance of 2,000 feet from any other oversize or overweight envelope or special permitted vehicle, combination of vehicles, or vehicle and load combination traveling on the same highway in the same direction except when passing.

B. A driver of an oversize or overweight vehicle or load shall not exceed the lower maximum speed determined by either of the following:

1. A speed limit printed on an issued permit, or
2. A highway-posted vehicle-specific speed limit.

C. The Department may order an alternative speed restriction to prevent:

1. Hazardous traffic conditions, or
2. Damages to a highway or highway feature.

~~**B.**~~**D.** Removal of highway signs, guardrails, or other assets from ~~the~~ a highway right-of-way is illegal under A.R.S. § 28-7053, and not authorized ~~under~~ by an oversize or overweight envelope or special permit issued by the Department under this Chapter ~~and is illegal under A.R.S. § 28-7053~~. A separate encroachment permit ~~issued by the Department~~ is required ~~to enter the~~ before entering any highway right-of-way for ~~these~~ purposes ~~or for any reason~~ other than authorized public travel. ~~The activities authorized while in the right-of-way shall be outlined in the encroachment permit.~~ An encroachment permit issued by the Department under 17 A.A.C. 3, Article 5, will specifically detail each activity allowed to be conducted within a highway right-of-way for any reason other than authorized public travel.

~~**C.**~~**E.** Replacement of any state-owned highway feature moved under an encroachment permit, issued pursuant to 17 A.A.C. 3, Article 5, as a result of the transport of an oversize or overweight vehicle along a traveled route, shall be detailed on the encroachment permit and completed under Department supervision.

~~**D.**~~**F.** A permittee ~~and~~ or driver of an oversize or overweight envelope or special permitted vehicle, combination of vehicles, or vehicle and load combination shall access and review, prior to commencing transport on any trip, ~~shall access and review~~ the most current information on ~~roadway~~ highway-specific conditions, closures, ~~and~~ restrictions, and other requirements applicable to R17-6-412, Table 4, as provided in real-time using ~~one~~ any of the following methods:

1. Phone inquiry - dial 511, or
2. Online inquiry - visit ~~www.az511.gov~~ az511.gov.

G. A permittee or driver of an oversize or overweight envelope or special permitted vehicle, combination of vehicles, or vehicle and load combination, may additionally receive real-time alerts and critical information on highway-specific conditions, closures, restrictions, and other requirements temporarily or permanently affecting travel on a route listed under R17-6-412, Table 4, by accessing the Department's:

1. Twitter feed, @ArizonaDOT; or
2. ADOTAlerts mobile app, available free at ADOTAlerts.com, which can provide critical information directly to all app users in an affected area where and when a freeway closure or other major traffic event occurs, and where possible, may provide advance warning of an alternate route designation.

~~R17-6-402.~~ ~~Speed Restriction~~ Repealed

~~**A.** A driver of an oversize or overweight vehicle or load shall not exceed the lower maximum speed determined by either of the following:~~

~~1. A speed limit printed on an issued permit, or~~
~~2. A highway posted vehicle-specific speed limit.~~

~~**B.** The Department may order an alternative speed restriction to prevent:~~

~~1. Hazardous traffic conditions, or~~
~~2. Damages to a highway or highway feature.~~

Editor's Note: All language previously appearing in R17-6-402 moved without change to R17-6-401(B) and (C).

~~R17-6-408.~~R17-6-402. Continuous Travel; Holiday Transport Restriction

A. Except as provided under ~~R17-6-404,~~ R17-6-205, and subject to R17-6-404 and R17-6-412, Table 4, a permittee or driver of an oversize, ~~or~~ overweight, or oversize and overweight envelope or special permitted vehicle, combination of vehicles, or vehicle and load combination is eligible for continuous travel ~~under this Section,~~ if the vehicle, combination of vehicles, or vehicle and load combination does not exceed any of the following dimensions:

1. 10 feet in width;
2. 14 feet 6 inches in height;
3. ~~3~~ 10 feet in length of front overhang;
4. 10 feet in length of rear overhang;
5. 120 feet in overall length; or
6. 250,000 pounds.

~~**B.** Unless otherwise restricted under R17-6-404, R17-6-405, R17-6-406, or R17-6-412, Table 4, a permittee or driver of a self-propelled mobile crane, drilling rig, or similar specialty equipment issued a special permit under R17-6-205, is eligible for continuous travel if the vehicle does not exceed any of the following dimensions:~~

~~1. 11 feet in width;~~
~~2. 14 feet in height;~~
~~3. 3 feet in length of front overhang;~~

~~4. 10 feet in length of rear overhang;~~

~~5. 120 feet in overall length; or~~

~~6. 250,000 pounds.~~

B. Except as provided under subsection (E) of this Section, R17-6-210, R17-6-409, or while operating under the emergency operation provisions in R17-6-112, a permittee or driver of an oversize, overweight, or oversize and overweight envelope or special permitted vehicle, combination of vehicles, or vehicle and load combination exceeding a dimension described under subsection (A), or R17-6-205(B), may not transport on the following holidays:

1. New Year's Day,
2. Memorial Day,
3. Independence Day,
4. Labor Day,
5. Thanksgiving Day, or
6. Christmas Day.

C. The transport restriction for a holiday listed under subsection (B) shall also include days before and after the holiday as follows:

1. When a holiday occurs on a Friday, transport shall stop at 12 noon on the preceding Thursday and may resume the following Monday at one-half hour before sunrise, or Monday at 3:00 a.m. if eligible for night and weekend transport under R17-6-403;
2. When a holiday occurs on a Saturday, transport shall stop at 12 noon on the preceding Thursday and may resume the following Monday at one-half hour before sunrise, or Monday at 3:00 a.m. if eligible for night and weekend transport under R17-6-403;
3. When a holiday occurs on a Sunday, transport shall stop at 12 noon on the preceding Friday and may resume the following Tuesday at one-half hour before sunrise, or Tuesday at 3:00 a.m. if eligible for night and weekend transport under R17-6-403;
4. When a holiday occurs on a Monday, transport shall stop at 12 noon on the preceding Friday and may resume the following Tuesday at one-half hour before sunrise, or Tuesday at 3:00 a.m. if eligible for night and weekend transport under R17-6-403; and
5. When a holiday occurs on a Tuesday, Wednesday, or Thursday, transport shall stop at 12 noon on the day before the holiday and may resume the day after the holiday at one-half hour before sunrise, or the day after the holiday at 3:00 a.m. if eligible for night and weekend transport under R17-6-403.

~~C.~~**D.** A permittee or driver of a vehicle or load transporting under this Section shall additionally ensure appropriate escort vehicle accompaniment as provided under R17-6-305 or R17-6-307 and comply with all other applicable restrictions and escort vehicle requirements provided under ~~R17-6-305 and R17-6-412, Table 4~~ Articles 3 and 4 of this Chapter.

E. The Department may approve holiday transport under a class C special permit for a vehicle, combination of vehicles, or a vehicle and load combination exceeding a dimension provided under this Section, or R17-6-205, upon determining the exception to be in the best interest of public safety.

~~R17-6-405.~~R17-6-403. Night and Weekend Transport ~~Allowance~~

A. Except as provided under ~~R17-6-414~~ R17-6-409, or unless further restricted under this Chapter, a permittee or driver of an oversize, overweight, or oversize and overweight envelope or special permitted vehicle, combination of vehicles, or vehicle and load combination ineligible for continuous travel under ~~R17-6-408~~ R17-6-205 or R17-6-402 due to excess width or height, may transport at night or on a weekend as provided under this Section, if the vehicle or vehicle and load combination ~~is~~ does not exceed any of the following dimensions:

1. ~~Over 10 feet to~~ 16 feet in width~~,~~;
2. ~~Over 14 feet 6 inches to~~ 16 feet in height~~,~~;
3. ~~Otherwise within the limits provided under R17-6-408~~ 10 feet in length of front overhang~~.~~;
4. 10 feet in length of rear overhang;
5. 120 feet in overall length; or
6. 250,000 pounds in overall weight.

B. ~~A~~ Subject to any restriction provided under R17-6-405, and unless further restricted under this Chapter, a permittee or driver of a vehicle, or vehicle and load combination, described under subsection (A) may transport at night or on a Saturday or Sunday as follows:

1. On any non-holiday night or weekend;
2. ~~From~~ Beginning at 3:00 a.m. until ~~12 noon~~ no later than one-half hour after sunset, exact daily times as defined under R17-6-101;
3. ~~On~~ Using select routes authorized by the Department under R17-6-412, Table 4, for night and weekend transport ~~under R17-6-412, Table 4; and~~, unless the Department:
   a. Restricts operation on a highway; or
   b. Grants alternate, permit-specific, hours of operation other than those listed under this subsection as a necessary condition for maintaining highway safety;
4. ~~With applicable escort accompaniment as provided under subsection (D).~~
4. Operating in the rightmost lane of a multi-lane highway if indicated on the envelope or special permit except to overtake and pass another vehicle; and
5. Maintaining a minimum distance of 2,000 feet from any other oversize or overweight vehicle, combination of vehicles, or vehicle and load combination traveling on the same highway in the same direction except when passing.

C. A permittee or driver of a vehicle or load transporting under this Section shall additionally ensure appropriate escort vehicle accompaniment as provided under R17-6-305 or R17-6-307 and comply with all other applicable restrictions and escort vehicle requirements provided under ~~R17-6-412, Table 4~~ Articles 3 and 4 of this Chapter.

~~**D.** Unless the Department requires additional escort vehicles under R17-6-412, Table 4, a permittee or driver of a vehicle or load transporting under this Section shall have escort vehicle accompaniment as follows:~~

~~1. Over 11 to 14 feet in width requires a rear escort,~~
~~2. Over 14 to 16 feet in width requires a front and rear escort, and~~
~~3. Over 15 feet in height requires a front escort with a height pole.~~

~~E.~~**D.** The Department may approve night or weekend transport under a class C special permit for a vehicle, combination of vehicles, or a vehicle and load combination exceeding ~~the dimensions provided under subsection (A)~~ a dimension provided under this Section, or R17-6-205, upon determining the exception to be in the best interest of ~~the~~ public safety.

R17-6-404. Metropolitan Curfew Transport ~~Restriction~~

A. ~~Unless~~ Except as provided under subsection (B) of this Section, and unless otherwise provided under this Article, ~~this Section shall apply as provided under subsections (B) and (C) to a~~ an envelope or special permitted vehicle, combination of vehicles, or vehicle and load combination ~~or load~~ that exceeds 10 feet in width~~, but does~~ is subject to the metropolitan curfew provided under subsections (C) and (D) and shall not exceed any of the following dimensions during curfew hours:

1. 16 feet in height, or less if further restricted under R17-6-412, Table 4;
2. ~~3~~ 10 feet in length of front overhang;
3. 10 feet in length of rear overhang;
4. 120 feet in overall length; or
5. 250,000 pounds.

B. Unless otherwise provided under this Article, a self-propelled mobile crane, drilling rig, or similar specialty equipment exceeding eleven feet in width is subject to the metropolitan curfew provided under subsections (C) and (D) and shall not exceed any of the following dimensions during curfew hours:

1. 14 feet 6 inches in height;
2. 10 feet in length of front overhang;
3. 10 feet in length of rear overhang;
4. 120 feet in overall length; or
5. 250,000 pounds.

~~B.~~**C.** A permittee or driver of ~~a~~ an envelope or special permitted vehicle or load described under subsection (A) or (B) ~~may transport on a Monday through Friday during curfew hours subject to the following routes and restrictions~~ is subject to width restrictions on metropolitan routes if transporting during curfew hours, as provided below:

Metropolitan Phoenix - Curfew Routes and Restrictions		
Route	**Restriction Location (MP = Milepost)**	**Width Restrictions Monday through Friday During ~~the~~ Curfew Hours ~~of~~: 7:00 a.m. to 9:00 a.m.; and 4:00 p.m. to 6:00 p.m.**
SR 24	MP 0.00 (Junction SR 202 Loop) to MP 1.00 (Ellsworth Road)	Over 10’ - 12’ = Requires rear escort Over 12’ - 16’ = No transport
SR 202 Loop	MP 9.80 (Junction SR 101 Loop) to MP 57.24 (Junction I-10)	Over 10’ - 12’ = Requires rear escort Over 12’ - 16’ = No transport
SR 101 Loop	MP 1.21 (Junction I-10, near 99th Avenue) to MP 61.33 (Junction SR 202 Loop)	Over 10’ - 12’ = Requires rear escort Over 12’ - 16’ = No transport

Metropolitan Tucson - Curfew Routes and Restrictions		
SR 989	MP 34.01 (N. Rancho Vistoso Blvd/N. 1st Avenue) to MP 36.00 (Junction SR 77 at Oracle Road)	Over 10’ - 12’ = Requires rear escort Over 12’ - 16’ = No transport

~~C.~~**D.** A permittee or driver of ~~a~~ an envelope or special permitted vehicle or load ~~exceeding any dimension~~ described under subsection (A) or (B) shall not transport on ~~a~~ the following metropolitan routes if transporting Monday through Friday during curfew hours ~~subject to the following routes and restrictions~~, as provided below:

Metropolitan Phoenix - Curfew Routes and Restrictions		
Route	**Restriction Location (MP = Milepost)**	**Width Restrictions Monday through Friday During ~~the~~ Curfew Hours ~~of~~: 7:00 a.m. to 9:00 a.m.; and 4:00 p.m. to 6:00 p.m.**
I-10	MP 133.98 (Junction SR 101 Loop) to MP 161.35 (Junction SR 202 Loop, Santan)	Over 10’ - 16’ = No transport
I-17	MP 193.94 (~~Beginning of route at~~ Junction I-10 and SR 51) to MP 214.96 (Junction SR 101 Loop)	Over 10’ - 16’ = No transport
SR 51	MP 0.00 (~~Junctions~~ Junction I-10 and SR ~~Loop~~ 202 Loop) to MP 15.90 (Junction SR ~~Loop~~ 101 Loop)	Over 10’ - 16’ = No transport
SR 143	MP 0.00 (Junction I-10) to MP 3.81 (McDowell Road)	Over 10’ - 16’ = No transport
SR 202 Loop	MP 0.00 (~~Junctions~~ Junction I-10 and SR 51) to MP 9.80 (Junction SR 101 Loop)	Over 10’ - 16’ = No transport
SR 202 Spur	MP 5.15 (Junction SR 202 Loop) to MP 6.28 (Sky Harbor Blvd)	Over 10’ - 16’ = No transport
US 60	~~MP 172.00 (Junction I-10)~~ MP 148.90 (Junction SR 101 Loop) to MP 190.51 (Junction SR 202 Loop)	Over 10’ - 16’ = No transport
Metropolitan Tucson - Curfew Routes and Restrictions		
I-10	MP 236.42 (Marana Road TI) to ~~MP 270.67~~ MP 270.57 (Kolb Road TI)	Over 10’ - 16’ = No transport
I-19	MP 59.09 (Valencia Road TI, Kilometer Post 95.00) to ~~MP 63.09~~ MP 63.43 (Junction I-10)	Over 10’ - 16’ = No transport
SR 77	MP 68.05 (Junction I-10 at W. Miracle Mile) to MP ~~79.48~~ 81.82 (Junction SR 989 at E. Tangerine Road)	Over 10’ - 16’ = No transport
SR 86	MP 164.04 (Camino Verde Road) to MP 171.44 (Junction I-19)	Over 10’ - 16’ = No transport
SR 210	MP 1.00 (Broadway Blvd) to MP 4.78 (Richey Blvd)	Over 10’ - 16’ = No transport
~~**Metropolitan Yuma - Curfew Routes and Restrictions**~~		
~~US 95~~	~~MP 19.84 (32nd Street East) to MP 31.87 (Avenue 9E)~~	~~Over 10’ - 16’ = No transport~~
~~SB 8~~	~~MP 0.00 (California State Line) to MP 11.50 (End of route near I-8, east of Yuma)~~	~~Over 10’ - 16’ = No transport~~

~~R17-6-403.~~R17-6-405. Weather Restrictions; Hazardous Conditions

A. Responsibility. A driver of an oversize or overweight vehicle, or vehicle and load combination, shall:

1. Use the criteria provided under subsection (B) to identify unsafe roadway conditions and discontinue transport until safe to continue, and

2. Comply with all official agency weather-related travel advisories prohibiting oversize or overweight transport.

B. Determining conditions. A driver of an oversize or overweight vehicle, or vehicle and load combination, shall not transport under the following hazardous conditions:

Hazardous Conditions:	**Possible Causes May Include:**
Driver visibility range becomes less than 500 feet	• Blowing dust • Falling snow • Fog • Heavy rain
Road surface condition reduces normal traction	• Snow • Ice • Flooding
A load destabilizing condition endangers road surface or traffic	• High winds • Falling objects

R17-6-406. ~~**Holiday Transport Restriction**~~ **Repealed**

~~**A.** Except as provided under R17-6-414, this Section applies to an oversize or overweight special permitted vehicle or load with a dimension of more than:~~

~~1. 10 feet in width,~~

~~2. 14 feet 6 inches in height,~~

~~3. 3 feet in length of front overhang,~~

~~4. 10 feet in length of rear overhang, or~~

~~5. 120 feet in overall length.~~

~~**B.** A permittee or driver shall not transport an oversize or overweight vehicle or load described under subsection (A) in Arizona on the following holidays:~~

~~1. New Year's Day,~~

~~2. Memorial Day,~~

~~3. Independence Day,~~

~~4. Labor Day,~~

~~5. Thanksgiving Day, or~~

~~6. Christmas Day.~~

~~**C.** A restriction on transport for a holiday listed under subsection (B) also includes days before and after a holiday as follows:~~

~~1. When a holiday occurs on a Friday, transport shall stop at 12 noon on the preceding Thursday and may resume the following Monday at one-half hour before sunrise, or Monday at 3:00 a.m. if night transport is allowed under R17-6-409;~~

~~2. When a holiday occurs on a Saturday, transport shall stop at 12 noon on the preceding Thursday and may resume the following Monday at one-half hour before sunrise, or Monday at 3:00 a.m. if night transport is allowed under R17-6-409;~~

~~3. When a holiday occurs on a Sunday, transport shall stop at 12 noon on the preceding Friday and may resume the following Tuesday at one-half hour before sunrise, or Tuesday at 3:00 a.m. if night transport is allowed under R17-6-409;~~

~~4. When a holiday occurs on a Monday, transport shall stop at 12 noon on the preceding Friday and may resume the following Tuesday at one-half hour before sunrise, or Tuesday at 3:00 a.m. if night transport is allowed under R17-6-409; and~~

~~5. When a holiday occurs on a Tuesday, Wednesday, or Thursday, transport shall stop at 12 noon on the day before the holiday and may resume the day after the holiday at one-half hour before sunrise, or the day after the holiday at 3:00 a.m. if night transport is allowed under R17-6-409.~~

~~**D.** The Department may approve holiday transport under a class C special permit for a vehicle and load combination exceeding a dimension provided under subsection (A), upon determining the exception to be in the best interest of public safety.~~

Editor's Note: All language previously appearing in R17-6-406, Holiday Transport Restriction combined with R17-6-408, Continuous Travel and renumbered as R17-6-402, Continuous Travel; Holiday Transport Restriction.

R17-6-407. Route-specific and Permit-specific Transport Restrictions

~~A permittee or driver of a class C oversize or overweight special permitted vehicle or load shall not transport on a Friday from 12 noon until 3:00 a.m. on a route designated by the Department under R17-6-412, Table 4, as being subject to route-specific or permit-specific transport restrictions.~~ A permittee or driver of a vehicle, combination of vehicles, or vehicle and load combination that exceeds a class A oversize and overweight special permit limitation provided under this Article, or the maximum permitted weight computations for overweight axle group weight distribution provided under R17-6-411, is subject to class C route-specific and permit-specific restrictions if over 14 feet in width, and shall not transport on a Friday from 12 noon until 3:00 a.m. on any route identified by the Department in R17-6-412, Table 4, as being subject to this Section.

R17-6-408. Renumbered

R17-6-409. ~~Night Transport Restriction~~ Repealed

~~**A.** Unless further restricted under this Article, this Section applies to a permittee or driver of an oversize or overweight vehicle, or vehicle and load combination, within the following dimensions:~~

~~1. 16 feet or less in width;~~

~~2. 16 feet or less in height;~~

~~3. 3 feet or less in length of front overhang;~~

~~4. 10 feet or less in length of rear overhang;~~

~~5. 120 feet or less in overall length; or~~

~~6. 250,000 pounds or less in overall weight.~~

~~**B.** A permittee or driver of a vehicle or load described under subsection (A) may transport at night as follows:~~

~~1. Beginning at 3:00 a.m. except on any day, route, or time further restricted under R17-6-404 through R17-6-406;~~

~~2. On select routes authorized by the Department for night transport under R17-6-412, Table 4; and~~

~~3. With applicable escort accompaniment as provided under subsection (D).~~

~~**C.** A permittee or driver of a vehicle or load transporting under this Section shall additionally comply with all applicable restrictions and escort vehicle requirements provided under R17-6-412, Table 4.~~

~~**D.** Unless the Department requires additional escort vehicles under R17-6-412, Table 4, a permittee or driver of a vehicle or load transporting under this Section shall have escort vehicle accompaniment until sunrise as follows:~~

~~1. Over 11 to 14 feet in width requires a rear escort,~~

~~2. Over 14 to 16 feet in width requires a front and rear escort, and~~

~~3. Over 15 feet in height requires a front escort with a height pole.~~

~~**E.** The Department may approve night transport under a class C special permit for a vehicle, combination of vehicles, or a vehicle and load combination exceeding the dimensions provided under subsection (A) upon determining the exception to be in the best interest of public safety.~~

Editor's Note: All language previously appearing in R17-6-409, Night Transport Restriction combined with R17-6-405, Weekend Transport Allowance and renumbered as R17-6-403, Night and Weekend Transport.

~~R17-6-414.~~ R17-6-409. Lake-specific Weekend and Holiday Transport Exception

A permittee or driver that transports a personal watercraft load of no more than 12 feet in width under a class A special permit may operate from one-half hour before sunrise to one-half hour after sunset on a weekend or holiday on a state highway within 10 miles of an area constructed and maintained for the purpose of launching and retrieving watercraft for the following Arizona lakes:

1. Alamo,
2. Havasu,
3. Mead,
4. Mohave,
5. Powell, and
6. Saguaro.

Editor's Note: All language previously appearing in R17-6-409, Night Transport Restriction combined with R17-6-405, Weekend Transport Allowance and renumbered as R17-6-403, Night and Weekend Transport.

R17-6-410. Special Mobile Home Towing Restriction

A. A vehicle towing a mobile home shall have a factory rating that corresponds with the following criteria:

Load measurement criteria	**Towing vehicle factory rating**
10 feet or less in width and 50 feet or less in length, including hitch	1 1/2 tons
More than 10 feet in width or more than 50 feet in length, or both	Two tons; four tires per drive axle and minimum 99 inch wheel base

B. A mobile home transporter shall cover the open side of a mobile home module with plastic sheeting no thinner than 1.5 mil plus a rigid grillwork backing.

R17-6-411. Maximum Permitted Weights

~~**A.** Except as provided under R17-6-211 and R17-6-212, the Department shall use the formulas and computations provided under Tables 3.01 through 3.09, and Illustration 3, to determine the maximum weights allowed on any combination of axles within the distance between the front and rear axle of a given axle group, up to a maximum of 18 feet, when issuing an oversize or overweight special permit for a non-reducible vehicle or load under this Article.~~

~~**B.** The Department shall use the computations provided under R17-6-212, Table 7, to determine the maximum weights allowed for tridem axle group configurations subject to conditions, restrictions, allowances, and route limitations provided under R17-6-212, Table 6.~~

A. Except as provided under R17-6-212, an applicant requesting an envelope or special permit under this Chapter for transporting a non-reducible overweight or oversize and overweight vehicle, combination of vehicles, or vehicle and load combination shall use the formulas and computations provided under Illustration 3 and Tables 3.01 through 3.09 to determine the maximum weights allowed on any combination of axles spaced within a maximum distance of 18 feet between the front and rear axle of each axle group.

B. The formulas and computations provided under Illustration 3, and Tables 3.01 through 3.09, are an expansion of the federal bridge formula provided under A.R.S. § 28-1100 for use by the Department when issuing an overweight or oversize and overweight envelope or special permit for movement of a non-reducible vehicle or load under this Chapter.

C. The axle group weights provided under Illustration 3, and Tables 3.01 through 3.09, represent the maximum weights allowed on any combination of axles spaced within a distance of up to 18 feet between the front and rear axle of any given group. The values in Table 3.01 line “A” are an expression of the formula W = 1.5 x 700 (L + 40) for L = 3’ 5” to 18’ 0”, where L is the distance between the centers of the front and rear axles of an axle group. The values in line “B” and in the remaining Tables are calculated by applying the percentages provided in the Table footnotes to increase the allowable weights based on wider axle width and an increased number of tires. Measured axle widths are rounded down to the nearest 3” increment when determining the appropriate Table to use.

Illustration 3. Overweight Axle Group Weight Calculation

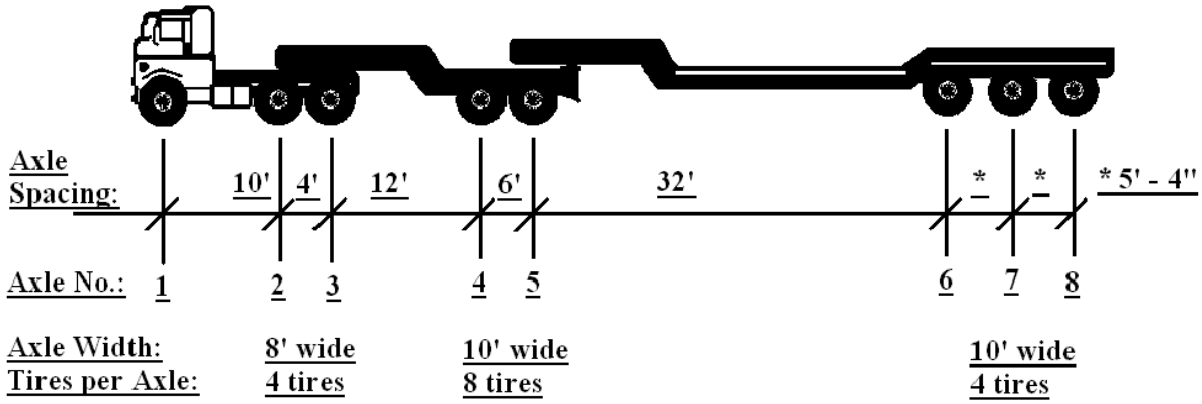

(Axle 1) limited to 28,000 lbs for single alone

(Axle 2 + 3); L = 4'; W = 46,200 lbs for tandem alone

(Axle 1) + (Axle 2 + 3); L = 14'; W = 56,700 lbs for the group

(Axle 4 + 5); L = 6'; W = 60,375 lbs (25% increase for 10' wide - 8 tires)

(Axle 2 + 3 + 4); L = 16'; W = (2/3 x 58,800) + (1/3 x 73,500) = 63,700 lbs

(Axle 3 + 4 + 5); L = 18'; W = (1/3 x 60,900) + (2/3 x 76,125) = 71,050 lbs

(Axle 3 + 4); L = 12'; W = (1/2 x 54,600) + (1/2 x 68,250) = 61,425 lbs

(Axle 6 + 7 +8); L = 10' 8"; W = 61,180 (15% increase for 10' wide - 4 tires)

Tables 3.01 through 3.09 provide the maximum allowable axle group weights determined by using the computation formula: Weight = 1.5 X 700 (L + 40) for L = 3' 5" to 18' 0", where L = Distance between the center of the front axle and the center of the rear axle of any group of axles located within a space of 3' 5" to 18' 0".

Axle group configurations of different widths or numbers of tires are prorated within the total group load when determining any allowable increase over the basic formula weight as indicated by the footnotes in Tables 3.01 through 3.09.

~~Table 3.01. Maximum Permitted Weight Computations: Axle Width - 8 Feet~~
~~Overweight Axle Group Chart~~
~~Distance between the center of the front axle and the center of the rear axle of a given group.~~

			~~Inches~~											
			~~0~~	~~1~~	~~2~~	~~3~~	~~4~~	~~5~~	~~6~~	~~7~~	~~8~~	~~9~~	~~10~~	~~11~~
~~Feet~~	~~3~~	~~A~~	~~28,000~~	~~28,000~~	~~28,000~~	~~28,000~~	~~28,000~~	~~28,000~~	~~45,675~~	~~45,763~~	~~45,850~~	~~45,938~~	~~46,025~~	~~46,113~~
		~~B~~	~~32,200~~	~~32,200~~	~~32,200~~	~~32,200~~	~~32,200~~	~~32,200~~	~~52,526~~	~~52,627~~	~~52,728~~	~~52,828~~	~~52,929~~	~~53,029~~
	~~4~~	~~A~~	~~46,200~~	~~46,288~~	~~46,375~~	~~46,463~~	~~46,550~~	~~46,638~~	~~46,725~~	~~46,813~~	~~46,900~~	~~46,988~~	~~47,075~~	~~47,163~~
		~~B~~	~~53,130~~	~~53,231~~	~~53,331~~	~~53,432~~	~~53,533~~	~~53,633~~	~~53,734~~	~~53,834~~	~~53,935~~	~~54,036~~	~~54,136~~	~~54,237~~
	~~5~~	~~A~~	~~47,250~~	~~47,338~~	~~47,425~~	~~47,513~~	~~47,600~~	~~47,688~~	~~47,775~~	~~47,863~~	~~47,950~~	~~48,038~~	~~48,125~~	~~48,213~~
		~~B~~	~~54,338~~	~~54,438~~	~~54,539~~	~~54,639~~	~~54,740~~	~~54,841~~	~~54,941~~	~~55,042~~	~~55,143~~	~~55,243~~	~~55,344~~	~~55,444~~
	~~6~~	~~A~~	~~48,300~~	~~48,388~~	~~48,475~~	~~48,563~~	~~48,650~~	~~48,738~~	~~48,825~~	~~48,913~~	~~49,000~~	~~49,088~~	~~49,175~~	~~49,263~~
		~~B~~	~~55,545~~	~~55,646~~	~~55,746~~	~~55,847~~	~~55,948~~	~~56,048~~	~~56,149~~	~~56,249~~	~~56,350~~	~~56,451~~	~~56,551~~	~~56,652~~
	~~7~~	~~A~~	~~49,350~~	~~49,438~~	~~49,525~~	~~49,613~~	~~49,700~~	~~49,788~~	~~49,875~~	~~49,963~~	~~50,050~~	~~50,138~~	~~50,225~~	~~50,313~~
		~~B~~	~~56,753~~	~~56,853~~	~~56,954~~	~~57,054~~	~~57,155~~	~~57,256~~	~~57,356~~	~~57,457~~	~~57,558~~	~~57,658~~	~~57,759~~	~~57,859~~
	~~8~~	~~A~~	~~50,400~~	~~50,488~~	~~50,575~~	~~50,663~~	~~50,750~~	~~50,838~~	~~50,925~~	~~51,013~~	~~51,100~~	~~51,188~~	~~51,275~~	~~51,363~~
		~~B~~	~~57,960~~	~~58,061~~	~~58,161~~	~~58,262~~	~~58,363~~	~~58,463~~	~~58,564~~	~~58,664~~	~~58,765~~	~~58,866~~	~~58,966~~	~~59,067~~
	~~9~~	~~A~~	~~51,450~~	~~51,538~~	~~51,625~~	~~51,713~~	~~51,800~~	~~51,888~~	~~51,975~~	~~52,063~~	~~52,150~~	~~52,238~~	~~52,325~~	~~52,413~~
		~~B~~	~~59,168~~	~~59,268~~	~~59,369~~	~~59,469~~	~~59,570~~	~~59,671~~	~~59,771~~	~~59,872~~	~~59,973~~	~~60,073~~	~~60,174~~	~~60,274~~
	~~10~~	~~A~~	~~52,500~~	~~52,588~~	~~52,675~~	~~52,763~~	~~52,850~~	~~52,938~~	~~53,025~~	~~53,113~~	~~53,200~~	~~53,288~~	~~53,375~~	~~53,463~~
		~~B~~	~~60,375~~	~~60,476~~	~~60,576~~	~~60,677~~	~~60,778~~	~~60,878~~	~~60,979~~	~~61,079~~	~~61,180~~	~~61,281~~	~~61,381~~	~~61,482~~
	~~11~~	~~A~~	~~53,550~~	~~53,638~~	~~53,725~~	~~53,813~~	~~53,900~~	~~53,988~~	~~54,075~~	~~54,163~~	~~54,250~~	~~54,338~~	~~54,425~~	~~54,513~~
		~~B~~	~~61,583~~	~~61,683~~	~~61,784~~	~~61,884~~	~~61,985~~	~~62,086~~	~~62,186~~	~~62,287~~	~~62,388~~	~~62,488~~	~~62,589~~	~~62,689~~
	~~12~~	~~A~~	~~54,600~~	~~54,688~~	~~54,775~~	~~54,863~~	~~54,950~~	~~55,038~~	~~55,125~~	~~55,213~~	~~55,300~~	~~55,388~~	~~55,475~~	~~55,563~~
		~~B~~	~~62,790~~	~~62,891~~	~~62,991~~	~~63,092~~	~~63,193~~	~~63,293~~	~~63,394~~	~~63,494~~	~~63,595~~	~~63,696~~	~~63,796~~	~~63,897~~
	~~13~~	~~A~~	~~55,650~~	~~55,738~~	~~55,825~~	~~55,913~~	~~56,000~~	~~56,088~~	~~56,175~~	~~56,263~~	~~56,350~~	~~56,438~~	~~56,525~~	~~56,613~~
		~~B~~	~~63,998~~	~~64,098~~	~~64,199~~	~~64,299~~	~~64,400~~	~~64,501~~	~~64,601~~	~~64,702~~	~~64,803~~	~~64,903~~	~~65,004~~	~~65,104~~
	~~14~~	~~A~~	~~56,700~~	~~56,788~~	~~56,875~~	~~56,963~~	~~57,050~~	~~57,138~~	~~57,225~~	~~57,313~~	~~57,400~~	~~57,488~~	~~57,575~~	~~57,663~~
		~~B~~	~~65,205~~	~~65,306~~	~~65,406~~	~~65,507~~	~~65,608~~	~~65,708~~	~~65,809~~	~~65,909~~	~~66,010~~	~~66,111~~	~~66,211~~	~~66,312~~
	~~15~~	~~A~~	~~57,750~~	~~57,838~~	~~57,925~~	~~58,013~~	~~58,100~~	~~58,188~~	~~58,275~~	~~58,363~~	~~58,450~~	~~58,538~~	~~58,625~~	~~58,713~~
		~~B~~	~~66,413~~	~~66,513~~	~~66,614~~	~~66,714~~	~~66,815~~	~~66,916~~	~~67,016~~	~~67,117~~	~~67,218~~	~~67,318~~	~~67,419~~	~~67,519~~
	~~16~~	~~A~~	~~58,800~~	~~58,888~~	~~58,975~~	~~59,063~~	~~59,150~~	~~59,238~~	~~59,325~~	~~59,413~~	~~59,500~~	~~59,588~~	~~59,675~~	~~59,763~~
		~~B~~	~~67,620~~	~~67,721~~	~~67,821~~	~~67,922~~	~~68,023~~	~~68,123~~	~~68,224~~	~~68,324~~	~~68,425~~	~~68,526~~	~~68,626~~	~~68,727~~
	~~17~~	~~A~~	~~59,850~~	~~59,938~~	~~60,025~~	~~60,113~~	~~60,200~~	~~60,288~~	~~60,375~~	~~60,463~~	~~60,550~~	~~60,638~~	~~60,725~~	~~60,813~~
		~~B~~	~~68,828~~	~~68,928~~	~~69,029~~	~~69,129~~	~~69,230~~	~~69,331~~	~~69,431~~	~~69,532~~	~~69,633~~	~~69,733~~	~~69,834~~	~~69,934~~
	~~18~~	~~A~~	~~60,900~~											
		~~B~~	~~70,035~~											

~~Computation Formula: Weight = 1.5 X 700 (L + 40)~~
~~(L = Distance between the center of the front axle and the center of the rear axle of a given group.)~~

~~Legend:~~
~~Line A: Four tires per axle or two 14-inch wide tires. Value is the formula weight only.~~
~~Line B: Eight tires per axle or four 14-inch wide tires. Value is the formula weight plus 15%.~~

Table 3.01. Maximum Permitted Weight Computations for Overweight Axle Groups - Axle Width 8 Feet 0 Inches

Maximum allowable axle group weights determined by using the computation formula: Weight = 1.5 X 700 (L + 40), where:

L = Distance between the center of the front axle and the center of the rear axle of any group of axles within a space of 3’ 5” to 18’ 0”.

	L =	0” →	1”	2”	3”	4”	5”	6”	7”	8”	9”	10”	11”
A	3’	28,000	28,000	28,000	28,000	28,000	45,588	45,675	45,763	45,850	45,938	46,025	46,113
B	↓	32,200	32,200	32,200	32,200	32,200	52,426	52,526	52,627	52,728	52,828	52,929	53,029
A	4’	46,200	46,288	46,375	46,463	46,550	46,638	46,725	46,813	46,900	46,988	47,075	47,163
B		53,130	53,231	53,331	53,432	53,533	53,633	53,734	53,834	53,935	54,036	54,136	54,237
A	5’	47,250	47,338	47,425	47,513	47,600	47,688	47,775	47,863	47,950	48,038	48,125	48,213
B		54,338	54,438	54,539	54,639	54,740	54,841	54,941	55,042	55,143	55,243	55,344	55,444
A	6’	48,300	48,388	48,475	48,563	48,650	48,738	48,825	48,913	49,000	49,088	49,175	49,263
B		55,545	55,646	55,746	55,847	55,948	56,048	56,149	56,249	56,350	56,451	56,551	56,652
A	7’	49,350	49,438	49,525	49,613	49,700	49,788	49,875	49,963	50,050	50,138	50,225	50,313
B		56,753	56,853	56,954	57,054	57,155	57,256	57,356	57,457	57,558	57,658	57,759	57,859
A	8’	50,400	50,488	50,575	50,663	50,750	50,838	50,925	51,013	51,100	51,188	51,275	51,363
B		57,960	58,061	58,161	58,262	58,363	58,463	58,564	58,664	58,765	58,866	58,966	59,067
A	9’	51,450	51,538	51,625	51,713	51,800	51,888	51,975	52,063	52,150	52,238	52,325	52,413
B		59,168	59,268	59,369	59,469	59,570	59,671	59,771	59,872	59,973	60,073	60,174	60,274
A	10’	52,500	52,588	52,675	52,763	52,850	52,938	53,025	53,113	53,200	53,288	53,375	53,463
B		60,375	60,476	60,576	60,677	60,778	60,878	60,979	61,079	61,180	61,281	61,381	61,482
A	11’	53,550	53,638	53,725	53,813	53,900	53,988	54,075	54,163	54,250	54,338	54,425	54,513
B		61,583	61,683	61,784	61,884	61,985	62,086	62,186	62,287	62,388	62,488	62,589	62,689
A	12’	54,600	54,688	54,775	54,863	54,950	55,038	55,125	55,213	55,300	55,388	55,475	55,563
B		62,790	62,891	62,991	63,092	63,193	63,293	63,394	63,494	63,595	63,696	63,796	63,897
A	13’	55,650	55,738	55,825	55,913	56,000	56,088	56,175	56,263	56,350	56,438	56,525	56,613
B		63,998	64,098	64,199	64,299	64,400	64,501	64,601	64,702	64,803	64,903	65,004	65,104
A	14’	56,700	56,788	56,875	56,963	57,050	57,138	57,225	57,313	57,400	57,488	57,575	57,663
B		65,205	65,306	65,406	65,507	65,608	65,708	65,809	65,909	66,010	66,111	66,211	66,312
A	15’	57,750	57,838	57,925	58,013	58,100	58,188	58,275	58,363	58,450	58,538	58,625	58,713
B		66,413	66,513	66,614	66,714	66,815	66,916	67,016	67,117	67,218	67,318	67,419	67,519
A	16’	58,800	58,888	58,975	59,063	59,150	59,238	59,325	59,413	59,500	59,588	59,675	59,763
B		67,620	67,721	67,821	67,922	68,023	68,123	68,224	68,324	68,425	68,526	68,626	68,727
A	17’	59,850	59,938	60,025	60,113	60,200	60,288	60,375	60,463	60,550	60,638	60,725	60,813
B		68,828	68,928	69,029	69,129	69,230	69,331	69,431	69,532	69,633	69,733	69,834	69,934
A	18’	60,900											
B		70,035											

Legend (Tire measurement excludes any load-induced tire bulge):

Line A: Four tires per axle or two 14-inch wide tires per axle. Value is the formula weight only.

Line B: Eight tires per axle or four 14-inch wide tires per axle. Value is the formula weight plus 15%.

~~Table 3.02.~~ ~~Maximum Permitted Weight Computations: Axle Width - 8 Feet 3 Inches~~
~~Overweight Axle Group Chart~~
~~Distance between the center of the front axle and the center of the rear axle of a given group.~~

			~~Inches~~											
			~~0~~	~~1~~	~~2~~	~~3~~	~~4~~	~~5~~	~~6~~	~~7~~	~~8~~	~~9~~	~~10~~	~~11~~
~~Feet~~	~~3~~	~~A~~	~~28,525~~	~~28,525~~	~~28,525~~	~~28,525~~	~~28,525~~	~~28,525~~	~~46,531~~	~~46,621~~	~~46,710~~	~~46,799~~	~~46,888~~	~~46,977~~
		~~B~~	~~32,550~~	~~32,550~~	~~32,550~~	~~32,550~~	~~32,550~~	~~32,550~~	~~53,097~~	~~53,199~~	~~53,301~~	~~53,402~~	~~53,504~~	~~53,606~~
	~~4~~	~~A~~	~~47,066~~	~~47,155~~	~~47,245~~	~~47,334~~	~~47,423~~	~~47,512~~	~~47,601~~	~~47,690~~	~~47,779~~	~~47,869~~	~~47,958~~	~~48,047~~
		~~B~~	~~53,708~~	~~53,809~~	~~53,911~~	~~54,013~~	~~54,114~~	~~54,216~~	~~54,318~~	~~54,420~~	~~54,521~~	~~54,623~~	~~54,725~~	~~54,826~~
	~~5~~	~~A~~	~~48,136~~	~~48,225~~	~~48,314~~	~~48,403~~	~~48,493~~	~~48,582~~	~~48,671~~	~~48,760~~	~~48,849~~	~~48,938~~	~~49,027~~	~~49,116~~
		~~B~~	~~54,928~~	~~55,030~~	~~55,132~~	~~55,233~~	~~55,335~~	~~55,437~~	~~55,538~~	~~55,640~~	~~55,742~~	~~55,844~~	~~55,945~~	~~56,047~~
	~~6~~	~~A~~	~~49,206~~	~~49,295~~	~~49,384~~	~~49,473~~	~~49,562~~	~~49,651~~	~~49,740~~	~~49,830~~	~~49,919~~	~~50,008~~	~~50,097~~	~~50,186~~
		~~B~~	~~56,149~~	~~56,250~~	~~56,352~~	~~56,454~~	~~56,556~~	~~56,657~~	~~56,759~~	~~56,861~~	~~56,963~~	~~57,064~~	~~57,166~~	~~57,268~~
	~~7~~	~~A~~	~~50,275~~	~~50,364~~	~~50,454~~	~~50,543~~	~~50,632~~	~~50,721~~	~~50,810~~	~~50,899~~	~~50,988~~	~~51,078~~	~~51,167~~	~~51,256~~
		~~B~~	~~57,369~~	~~57,471~~	~~57,573~~	~~57,675~~	~~57,776~~	~~57,878~~	~~57,980~~	~~58,081~~	~~58,183~~	~~58,285~~	~~58,387~~	~~58,488~~
	~~8~~	~~A~~	~~51,345~~	~~51,434~~	~~51,523~~	~~51,612~~	~~51,702~~	~~51,791~~	~~51,880~~	~~51,969~~	~~52,058~~	~~52,147~~	~~52,236~~	~~52,326~~
		~~B~~	~~58,590~~	~~58,692~~	~~58,793~~	~~58,895~~	~~58,997~~	~~59,099~~	~~59,200~~	~~59,302~~	~~59,404~~	~~59,505~~	~~59,607~~	~~59,709~~
	~~9~~	~~A~~	~~52,415~~	~~52,504~~	~~52,593~~	~~52,682~~	~~52,771~~	~~52,860~~	~~52,950~~	~~53,039~~	~~53,128~~	~~53,217~~	~~53,306~~	~~53,395~~
		~~B~~	~~59,811~~	~~59,912~~	~~60,014~~	~~60,116~~	~~60,218~~	~~60,319~~	~~60,421~~	~~60,523~~	~~60,624~~	~~60,726~~	~~60,828~~	~~60,930~~
	~~10~~	~~A~~	~~53,484~~	~~53,574~~	~~53,663~~	~~53,752~~	~~53,841~~	~~53,930~~	~~54,019~~	~~54,108~~	~~54,198~~	~~54,287~~	~~54,376~~	~~54,465~~
		~~B~~	~~61,031~~	~~61,133~~	~~61,235~~	~~61,336~~	~~61,438~~	~~61,540~~	~~61,642~~	~~61,743~~	~~61,845~~	~~61,947~~	~~62,048~~	~~62,150~~
	~~11~~	~~A~~	~~54,554~~	~~54,643~~	~~54,732~~	~~54,821~~	~~54,911~~	~~55,000~~	~~55,089~~	~~55,178~~	~~55,267~~	~~55,356~~	~~55,445~~	~~55,535~~
		~~B~~	~~62,252~~	~~62,354~~	~~62,455~~	~~62,557~~	~~62,659~~	~~62,760~~	~~62,862~~	~~62,964~~	~~63,066~~	~~63,167~~	~~63,269~~	~~63,371~~
	~~12~~	~~A~~	~~55,624~~	~~55,713~~	~~55,802~~	~~55,891~~	~~55,980~~	~~56,069~~	~~56,159~~	~~56,248~~	~~56,337~~	~~56,426~~	~~56,515~~	~~56,604~~
		~~B~~	~~63,473~~	~~63,574~~	~~63,676~~	~~63,778~~	~~63,879~~	~~63,981~~	~~64,083~~	~~64,185~~	~~64,286~~	~~64,388~~	~~64,490~~	~~64,591~~
	~~13~~	~~A~~	~~56,693~~	~~56,783~~	~~56,872~~	~~56,961~~	~~57,050~~	~~57,139~~	~~57,228~~	~~57,317~~	~~57,407~~	~~57,496~~	~~57,585~~	~~57,674~~
		~~B~~	~~64,693~~	~~64,795~~	~~64,897~~	~~64,998~~	~~65,100~~	~~65,202~~	~~65,303~~	~~65,405~~	~~65,507~~	~~65,609~~	~~65,710~~	~~65,812~~
	~~14~~	~~A~~	~~57,763~~	~~57,852~~	~~57,941~~	~~58,031~~	~~58,120~~	~~58,209~~	~~58,298~~	~~58,387~~	~~58,476~~	~~58,565~~	~~58,655~~	~~58,744~~
		~~B~~	~~65,914~~	~~66,015~~	~~66,117~~	~~66,219~~	~~66,321~~	~~66,422~~	~~66,524~~	~~66,626~~	~~66,728~~	~~66,829~~	~~66,931~~	~~67,033~~
	~~15~~	~~A~~	~~58,833~~	~~58,922~~	~~59,011~~	~~59,100~~	~~59,189~~	~~59,279~~	~~59,368~~	~~59,457~~	~~59,546~~	~~59,635~~	~~59,724~~	~~59,813~~
		~~B~~	~~67,134~~	~~67,236~~	~~67,338~~	~~67,440~~	~~67,541~~	~~67,643~~	~~67,745~~	~~67,846~~	~~67,948~~	~~68,050~~	~~68,152~~	~~68,253~~
	~~16~~	~~A~~	~~59,903~~	~~59,992~~	~~60,081~~	~~60,170~~	~~60,259~~	~~60,348~~	~~60,437~~	~~60,526~~	~~60,616~~	~~60,705~~	~~60,794~~	~~60,883~~
		~~B~~	~~68,355~~	~~68,457~~	~~68,558~~	~~68,660~~	~~68,762~~	~~68,864~~	~~68,965~~	~~69,067~~	~~69,169~~	~~69,270~~	~~69,372~~	~~69,474~~
	~~17~~	~~A~~	~~60,972~~	~~61,061~~	~~61,150~~	~~61,240~~	~~61,329~~	~~61,418~~	~~61,507~~	~~61,596~~	~~61,685~~	~~61,774~~	~~61,864~~	~~61,953~~
		~~B~~	~~69,576~~	~~69,677~~	~~69,779~~	~~69,881~~	~~69,983~~	~~70,084~~	~~70,186~~	~~70,288~~	~~70,389~~	~~70,491~~	~~70,593~~	~~70,695~~
	~~18~~	~~A~~	~~62,042~~											
		~~B~~	~~70,796~~											

~~Computation Formula: Weight = 1.5 X 700 (L + 40)~~
~~(L = Distance between the center of the front axle and the center of the rear axle of a given group.)~~

~~Legend:~~
~~Line A: Four tires per axle or two 14-inch wide tires. Value is the formula weight plus 1.875%.~~
~~Line B: Eight tires per axle or four 14-inch wide tires. Value is the formula weight plus 16.25%.~~

Table 3.02. Maximum Permitted Weight Computations for Overweight Axle Groups - Axle Width 8 Feet 3 Inches

Maximum allowable axle group weights determined by using the computation formula: Weight = 1.5 X 700 (L + 40), where:

L = Distance between the center of the front axle and the center of the rear axle of any group of axles within a space of 3’ 5” to 18’ 0”.

	L =	0” →	1”	2”	3”	4”	5”	6”	7”	8”	9”	10”	11”
A	3’	28,525	28,525	28,525	28,525	28,525	46,442	46,531	46,621	46,710	46,799	46,888	46,977
B	↓	32,550	32,550	32,550	32,550	32,550	52,995	53,097	53,199	53,301	53,402	53,504	53,606
A	4’	47,066	47,155	47,245	47,334	47,423	47,512	47,601	47,690	47,779	47,869	47,958	48,047
B		53,708	53,809	53,911	54,013	54,114	54,216	54,318	54,420	54,521	54,623	54,725	54,826
A	5’	48,136	48,225	48,314	48,403	48,493	48,582	48,671	48,760	48,849	48,938	49,027	49,116
B		54,928	55,030	55,132	55,233	55,335	55,437	55,538	55,640	55,742	55,844	55,945	56,047
A	6’	49,206	49,295	49,384	49,473	49,562	49,651	49,740	49,830	49,919	50,008	50,097	50,186
B		56,149	56,250	56,352	56,454	56,556	56,657	56,759	56,861	56,963	57,064	57,166	57,268
A	7’	50,275	50,364	50,454	50,543	50,632	50,721	50,810	50,899	50,988	51,078	51,167	51,256
B		57,369	57,471	57,573	57,675	57,776	57,878	57,980	58,081	58,183	58,285	58,387	58,488
A	8’	51,345	51,434	51,523	51,612	51,702	51,791	51,880	51,969	52,058	52,147	52,236	52,326
B		58,590	58,692	58,793	58,895	58,997	59,099	59,200	59,302	59,404	59,505	59,607	59,709
A	9’	52,415	52,504	52,593	52,682	52,771	52,860	52,950	53,039	53,128	53,217	53,306	53,395
B		59,811	59,912	60,014	60,116	60,218	60,319	60,421	60,523	60,624	60,726	60,828	60,930
A	10’	53,484	53,574	53,663	53,752	53,841	53,930	54,019	54,108	54,198	54,287	54,376	54,465
B		61,031	61,133	61,235	61,336	61,438	61,540	61,642	61,743	61,845	61,947	62,048	62,150
A	11’	54,554	54,643	54,732	54,821	54,911	55,000	55,089	55,178	55,267	55,356	55,445	55,535
B		62,252	62,354	62,455	62,557	62,659	62,760	62,862	62,964	63,066	63,167	63,269	63,371
A	12’	55,624	55,713	55,802	55,891	55,980	56,069	56,159	56,248	56,337	56,426	56,515	56,604
B		63,473	63,574	63,676	63,778	63,879	63,981	64,083	64,185	64,286	64,388	64,490	64,591
A	13’	56,693	56,783	56,872	56,961	57,050	57,139	57,228	57,317	57,407	57,496	57,585	57,674
B		64,693	64,795	64,897	64,998	65,100	65,202	65,303	65,405	65,507	65,609	65,710	65,812
A	14’	57,763	57,852	57,941	58,031	58,120	58,209	58,298	58,387	58,476	58,565	58,655	58,744
B		65,914	66,015	66,117	66,219	66,321	66,422	66,524	66,626	66,728	66,829	66,931	67,033
A	15’	58,833	58,922	59,011	59,100	59,189	59,279	59,368	59,457	59,546	59,635	59,724	59,813
B		67,134	67,236	67,338	67,440	67,541	67,643	67,745	67,846	67,948	68,050	68,152	68,253
A	16’	59,903	59,992	60,081	60,170	60,259	60,348	60,437	60,526	60,616	60,705	60,794	60,883
B		68,355	68,457	68,558	68,660	68,762	68,864	68,965	69,067	69,169	69,270	69,372	69,474
A	17’	60,972	61,061	61,150	61,240	61,329	61,418	61,507	61,596	61,685	61,774	61,864	61,953
B		69,576	69,677	69,779	69,881	69,983	70,084	70,186	70,288	70,389	70,491	70,593	70,695
A	18’	62,042											
B		70,796											

Legend (Tire measurement excludes any load-induced tire bulge):

Line A: Four tires per axle or two 14-inch wide tires per axle. Value is the formula weight plus 1.875%.

Line B: Eight tires per axle or four 14-inch wide tires per axle. Value is the formula weight plus 16.25%.

~~Table 3.03.~~ ~~Maximum Permitted Weight Computations: Axle Width - 8 Feet 6 Inches~~

~~Overweight Axle Group Chart~~

~~Distance between the center of the front axle and the center of the rear axle of a given group.~~

			~~Inches~~											
			~~0~~	~~1~~	~~2~~	~~3~~	~~4~~	~~5~~	~~6~~	~~7~~	~~8~~	~~9~~	~~10~~	~~11~~
~~Feet~~	~~3~~	~~A~~	~~29,050~~	~~29,050~~	~~29,050~~	~~29,050~~	~~29,050~~	~~29,050~~	~~47,388~~	~~47,479~~	~~47,569~~	~~47,660~~	~~47,751~~	~~47,842~~
		~~B~~	~~32,900~~	~~32,900~~	~~32,900~~	~~32,900~~	~~32,900~~	~~32,900~~	~~53,668~~	~~53,771~~	~~53,874~~	~~53,977~~	~~54,079~~	~~54,182~~
	~~4~~	~~A~~	~~47,933~~	~~48,023~~	~~48,114~~	~~48,205~~	~~48,296~~	~~48,386~~	~~48,477~~	~~48,568~~	~~48,659~~	~~48,750~~	~~48,840~~	~~48,931~~
		~~B~~	~~54,285~~	~~54,388~~	~~54,491~~	~~54,593~~	~~54,696~~	~~54,799~~	~~54,902~~	~~55,005~~	~~55,108~~	~~55,210~~	~~55,313~~	~~55,416~~
	~~5~~	~~A~~	~~49,022~~	~~49,113~~	~~49,203~~	~~49,294~~	~~49,385~~	~~49,476~~	~~49,567~~	~~49,657~~	~~49,748~~	~~49,839~~	~~49,930~~	~~50,020~~
		~~B~~	~~55,519~~	~~55,622~~	~~55,724~~	~~55,827~~	~~55,930~~	~~56,033~~	~~56,136~~	~~56,238~~	~~56,341~~	~~56,444~~	~~56,547~~	~~56,650~~
	~~6~~	~~A~~	~~50,111~~	~~50,202~~	~~50,293~~	~~50,384~~	~~50,474~~	~~50,565~~	~~50,656~~	~~50,747~~	~~50,838~~	~~50,928~~	~~51,019~~	~~51,110~~
		~~B~~	~~56,753~~	~~56,855~~	~~56,958~~	~~57,061~~	~~57,164~~	~~57,267~~	~~57,369~~	~~57,472~~	~~57,575~~	~~57,678~~	~~57,781~~	~~57,883~~
	~~7~~	~~A~~	~~51,201~~	~~51,291~~	~~51,382~~	~~51,473~~	~~51,564~~	~~51,655~~	~~51,745~~	~~51,836~~	~~51,927~~	~~52,018~~	~~52,108~~	~~52,199~~
		~~B~~	~~57,986~~	~~58,089~~	~~58,192~~	~~58,295~~	~~58,398~~	~~58,500~~	~~58,603~~	~~58,706~~	~~58,809~~	~~58,912~~	~~59,014~~	~~59,117~~
	~~8~~	~~A~~	~~52,290~~	~~52,381~~	~~52,472~~	~~52,562~~	~~52,653~~	~~52,744~~	~~52,835~~	~~52,925~~	~~53,016~~	~~53,107~~	~~53,198~~	~~53,289~~
		~~B~~	~~59,220~~	~~59,323~~	~~59,426~~	~~59,528~~	~~59,631~~	~~59,734~~	~~59,837~~	~~59,940~~	~~60,043~~	~~60,145~~	~~60,248~~	~~60,351~~
	~~9~~	~~A~~	~~53,379~~	~~53,470~~	~~53,561~~	~~53,652~~	~~53,743~~	~~53,833~~	~~53,924~~	~~54,015~~	~~54,106~~	~~54,196~~	~~54,287~~	~~54,378~~
		~~B~~	~~60,454~~	~~60,557~~	~~60,659~~	~~60,762~~	~~60,865~~	~~60,968~~	~~61,071~~	~~61,173~~	~~61,276~~	~~61,379~~	~~61,482~~	~~61,585~~
	~~10~~	~~A~~	~~54,469~~	~~54,560~~	~~54,650~~	~~54,741~~	~~54,832~~	~~54,923~~	~~55,013~~	~~55,104~~	~~55,195~~	~~55,286~~	~~55,377~~	~~55,467~~
		~~B~~	~~61,688~~	~~61,790~~	~~61,893~~	~~61,996~~	~~62,099~~	~~62,202~~	~~62,304~~	~~62,407~~	~~62,510~~	~~62,613~~	~~62,716~~	~~62,818~~
	~~11~~	~~A~~	~~55,558~~	~~55,649~~	~~55,740~~	~~55,830~~	~~55,921~~	~~56,012~~	~~56,103~~	~~56,194~~	~~56,284~~	~~56,375~~	~~56,466~~	~~56,557~~
		~~B~~	~~62,921~~	~~63,024~~	~~63,127~~	~~63,230~~	~~63,333~~	~~63,435~~	~~63,538~~	~~63,641~~	~~63,744~~	~~63,847~~	~~63,949~~	~~64,052~~
	~~12~~	~~A~~	~~56,648~~	~~56,738~~	~~56,829~~	~~56,920~~	~~57,011~~	~~57,101~~	~~57,192~~	~~57,283~~	~~57,374~~	~~57,465~~	~~57,555~~	~~57,646~~
		~~B~~	~~64,155~~	~~64,258~~	~~64,361~~	~~64,463~~	~~64,566~~	~~64,669~~	~~64,772~~	~~64,875~~	~~64,978~~	~~65,080~~	~~65,183~~	~~65,286~~
	~~13~~	~~A~~	~~57,737~~	~~57,828~~	~~57,918~~	~~58,009~~	~~58,100~~	~~58,191~~	~~58,282~~	~~58,372~~	~~58,463~~	~~58,554~~	~~58,645~~	~~58,735~~
		~~B~~	~~65,389~~	~~65,492~~	~~65,594~~	~~65,697~~	~~65,800~~	~~65,903~~	~~66,006~~	~~66,108~~	~~66,211~~	~~66,314~~	~~66,417~~	~~66,520~~
	~~14~~	~~A~~	~~58,826~~	~~58,917~~	~~59,008~~	~~59,099~~	~~59,189~~	~~59,280~~	~~59,371~~	~~59,462~~	~~59,553~~	~~59,643~~	~~59,734~~	~~59,825~~
		~~B~~	~~66,623~~	~~66,725~~	~~66,828~~	~~66,931~~	~~67,034~~	~~67,137~~	~~67,239~~	~~67,342~~	~~67,445~~	~~67,548~~	~~67,651~~	~~67,753~~
	~~15~~	~~A~~	~~59,916~~	~~60,006~~	~~60,097~~	~~60,188~~	~~60,279~~	~~60,370~~	~~60,460~~	~~60,551~~	~~60,642~~	~~60,733~~	~~60,823~~	~~60,914~~
		~~B~~	~~67,856~~	~~67,959~~	~~68,062~~	~~68,165~~	~~68,268~~	~~68,370~~	~~68,473~~	~~68,576~~	~~68,679~~	~~68,782~~	~~68,884~~	~~68,987~~
	~~16~~	~~A~~	~~61,005~~	~~61,096~~	~~61,187~~	~~61,277~~	~~61,368~~	~~61,459~~	~~61,550~~	~~61,640~~	~~61,731~~	~~61,822~~	~~61,913~~	~~62,004~~
		~~B~~	~~69,090~~	~~69,193~~	~~69,296~~	~~69,398~~	~~69,501~~	~~69,604~~	~~69,707~~	~~69,810~~	~~69,913~~	~~70,015~~	~~70,118~~	~~70,221~~
	~~17~~	~~A~~	~~62,094~~	~~62,185~~	~~62,276~~	~~62,367~~	~~62,458~~	~~62,548~~	~~62,639~~	~~62,730~~	~~62,821~~	~~62,911~~	~~63,002~~	~~63,093~~
		~~B~~	~~70,324~~	~~70,427~~	~~70,529~~	~~70,632~~	~~70,735~~	~~70,838~~	~~70,941~~	~~71,043~~	~~71,146~~	~~71,249~~	~~71,352~~	~~71,455~~
	~~18~~	~~A~~	~~63,184~~											
		~~B~~	~~71,558~~											

~~Computation Formula: Weight = 1.5 X 700 (L + 40)~~

~~(L = Distance between the center of the front axle and the center of the rear axle of a given group.)~~

~~Legend:~~

~~Line A: Four tires per axle or two 14-inch wide tires. Value is the formula weight plus 3.75%.~~

~~Line B: Eight tires per axle or four 14-inch wide tires. Value is the formula weight plus 17.5%.~~

Table 3.03. Maximum Permitted Weight Computations for Overweight Axle Groups - Axle Width 8 Feet 6 Inches

Maximum allowable axle group weights determined by using the computation formula: Weight = 1.5 X 700 (L + 40), where:

L = Distance between the center of the front axle and the center of the rear axle of any group of axles within a space of 3’ 5” to 18’ 0”.

	L =	0” →	1”	2”	3”	4”	5”	6”	7”	8”	9”	10”	11”
A	3’	29,050	29,050	29,050	29,050	29,050	47,297	47,388	47,479	47,569	47,660	47,751	47,842
B	↓	32,900	32,900	32,900	32,900	32,900	53,565	53,668	53,771	53,874	53,977	54,079	54,182
A	4’	47,933	48,023	48,114	48,205	48,296	48,386	48,477	48,568	48,659	48,750	48,840	48,931
B		54,285	54,388	54,491	54,593	54,696	54,799	54,902	55,005	55,108	55,210	55,313	55,416
A	5’	49,022	49,113	49,203	49,294	49,385	49,476	49,567	49,657	49,748	49,839	49,930	50,020
B		55,519	55,622	55,724	55,827	55,930	56,033	56,136	56,238	56,341	56,444	56,547	56,650
A	6’	50,111	50,202	50,293	50,384	50,474	50,565	50,656	50,747	50,838	50,928	51,019	51,110
B		56,753	56,855	56,958	57,061	57,164	57,267	57,369	57,472	57,575	57,678	57,781	57,883
A	7’	51,201	51,291	51,382	51,473	51,564	51,655	51,745	51,836	51,927	52,018	52,108	52,199
B		57,986	58,089	58,192	58,295	58,398	58,500	58,603	58,706	58,809	58,912	59,014	59,117
A	8’	52,290	52,381	52,472	52,562	52,653	52,744	52,835	52,925	53,016	53,107	53,198	53,289
B		59,220	59,323	59,426	59,528	59,631	59,734	59,837	59,940	60,043	60,145	60,248	60,351
A	9’	53,379	53,470	53,561	53,652	53,743	53,833	53,924	54,015	54,106	54,196	54,287	54,378
B		60,454	60,557	60,659	60,762	60,865	60,968	61,071	61,173	61,276	61,379	61,482	61,585
A	10’	54,469	54,560	54,650	54,741	54,832	54,923	55,013	55,104	55,195	55,286	55,377	55,467
B		61,688	61,790	61,893	61,996	62,099	62,202	62,304	62,407	62,510	62,613	62,716	62,818
A	11’	55,558	55,649	55,740	55,830	55,921	56,012	56,103	56,194	56,284	56,375	56,466	56,557
B		62,921	63,024	63,127	63,230	63,333	63,435	63,538	63,641	63,744	63,847	63,949	64,052
A	12’	56,648	56,738	56,829	56,920	57,011	57,101	57,192	57,283	57,374	57,465	57,555	57,646
B		64,155	64,258	64,361	64,463	64,566	64,669	64,772	64,875	64,978	65,080	65,183	65,286
A	13’	57,737	57,828	57,918	58,009	58,100	58,191	58,282	58,372	58,463	58,554	58,645	58,735
B		65,389	65,492	65,594	65,697	65,800	65,903	66,006	66,108	66,211	66,314	66,417	66,520
A	14’	58,826	58,917	59,008	59,099	59,189	59,280	59,371	59,462	59,553	59,643	59,734	59,825
B		66,623	66,725	66,828	66,931	67,034	67,137	67,239	67,342	67,445	67,548	67,651	67,753
A	15’	59,916	60,006	60,097	60,188	60,279	60,370	60,460	60,551	60,642	60,733	60,823	60,914
B		67,856	67,959	68,062	68,165	68,268	68,370	68,473	68,576	68,679	68,782	68,884	68,987
A	16’	61,005	61,096	61,187	61,277	61,368	61,459	61,550	61,640	61,731	61,822	61,913	62,004
B		69,090	69,193	69,296	69,398	69,501	69,604	69,707	69,810	69,913	70,015	70,118	70,221
A	17’	62,094	62,185	62,276	62,367	62,458	62,548	62,639	62,730	62,821	62,911	63,002	63,093
B		70,324	70,427	70,529	70,632	70,735	70,838	70,941	71,043	71,146	71,249	71,352	71,455
A	18’	63,184											
B		71,558											

Legend (Tire measurement excludes any load-induced tire bulge):

Line A: Four tires per axle or two 14-inch wide tires per axle. Value is the formula weight plus 3.75%.

Line B: Eight tires per axle or four 14-inch wide tires per axle. Value is the formula weight plus 17.5%.

~~Table 3.04.~~ ~~Maximum Permitted Weight Computations: Axle Width - 8 Feet 9 Inches~~

~~Overweight Axle Group Chart~~

~~Distance between the center of the front axle and the center of the rear axle of a given group.~~

			~~Inches~~											
			~~0~~	~~1~~	~~2~~	~~3~~	~~4~~	~~5~~	~~6~~	~~7~~	~~8~~	~~9~~	~~10~~	~~11~~
~~Feet~~	~~3~~	~~A~~	~~29,575~~	~~29,575~~	~~29,575~~	~~29,575~~	~~29,575~~	~~29,575~~	~~48,244~~	~~48,337~~	~~48,429~~	~~48,521~~	~~48,614~~	~~48,706~~
		~~B~~	~~33,250~~	~~33,250~~	~~33,250~~	~~33,250~~	~~33,250~~	~~33,250~~	~~54,239~~	~~54,343~~	~~54,447~~	~~54,551~~	~~54,655~~	~~54,759~~
	~~4~~	~~A~~	~~48,799~~	~~48,891~~	~~48,984~~	~~49,076~~	~~49,168~~	~~49,261~~	~~49,353~~	~~49,446~~	~~49,538~~	~~49,631~~	~~49,723~~	~~49,815~~
		~~B~~	~~54,863~~	~~54,966~~	~~55,070~~	~~55,174~~	~~55,278~~	~~55,382~~	~~55,486~~	~~55,590~~	~~55,694~~	~~55,798~~	~~55,902~~	~~56,005~~
	~~5~~	~~A~~	~~49,908~~	~~50,000~~	~~50,093~~	~~50,185~~	~~50,278~~	~~50,370~~	~~50,462~~	~~50,555~~	~~50,647~~	~~50,740~~	~~50,832~~	~~50,924~~
		~~B~~	~~56,109~~	~~56,213~~	~~56,317~~	~~56,421~~	~~56,525~~	~~56,629~~	~~56,733~~	~~56,837~~	~~56,941~~	~~57,045~~	~~57,148~~	~~57,252~~
	~~6~~	~~A~~	~~51,017~~	~~51,109~~	~~51,202~~	~~51,294~~	~~51,387~~	~~51,479~~	~~51,571~~	~~51,664~~	~~51,756~~	~~51,849~~	~~51,941~~	~~52,034~~
		~~B~~	~~57,356~~	~~57,460~~	~~57,564~~	~~57,668~~	~~57,772~~	~~57,876~~	~~57,980~~	~~58,084~~	~~58,188~~	~~58,291~~	~~58,395~~	~~58,499~~
	~~7~~	~~A~~	~~52,126~~	~~52,218~~	~~52,311~~	~~52,403~~	~~52,496~~	~~52,588~~	~~52,680~~	~~52,773~~	~~52,865~~	~~52,958~~	~~53,050~~	~~53,143~~
		~~B~~	~~58,603~~	~~58,707~~	~~58,811~~	~~58,915~~	~~59,019~~	~~59,123~~	~~59,227~~	~~59,330~~	~~59,434~~	~~59,538~~	~~59,642~~	~~59,746~~
	~~8~~	~~A~~	~~53,235~~	~~53,327~~	~~53,420~~	~~53,512~~	~~53,605~~	~~53,697~~	~~53,790~~	~~53,882~~	~~53,974~~	~~54,067~~	~~54,159~~	~~54,252~~
		~~B~~	~~59,850~~	~~59,954~~	~~60,058~~	~~60,162~~	~~60,266~~	~~60,370~~	~~60,473~~	~~60,577~~	~~60,681~~	~~60,785~~	~~60,889~~	~~60,993~~
	~~9~~	~~A~~	~~54,344~~	~~54,436~~	~~54,529~~	~~54,621~~	~~54,714~~	~~54,806~~	~~54,899~~	~~54,991~~	~~55,083~~	~~55,176~~	~~55,268~~	~~55,361~~
		~~B~~	~~61,097~~	~~61,201~~	~~61,305~~	~~61,409~~	~~61,513~~	~~61,616~~	~~61,720~~	~~61,824~~	~~61,928~~	~~62,032~~	~~62,136~~	~~62,240~~
	~~10~~	~~A~~	~~55,453~~	~~55,546~~	~~55,638~~	~~55,730~~	~~55,823~~	~~55,915~~	~~56,008~~	~~56,100~~	~~56,193~~	~~56,285~~	~~56,377~~	~~56,470~~
		~~B~~	~~62,344~~	~~62,448~~	~~62,552~~	~~62,655~~	~~62,759~~	~~62,863~~	~~62,967~~	~~63,071~~	~~63,175~~	~~63,279~~	~~63,383~~	~~63,487~~
	~~11~~	~~A~~	~~56,562~~	~~56,655~~	~~56,747~~	~~56,839~~	~~56,932~~	~~57,024~~	~~57,117~~	~~57,209~~	~~57,302~~	~~57,394~~	~~57,486~~	~~57,579~~
		~~B~~	~~63,591~~	~~63,695~~	~~63,798~~	~~63,902~~	~~64,006~~	~~64,110~~	~~64,214~~	~~64,318~~	~~64,422~~	~~64,526~~	~~64,630~~	~~64,734~~
	~~12~~	~~A~~	~~57,671~~	~~57,764~~	~~57,856~~	~~57,949~~	~~58,041~~	~~58,133~~	~~58,226~~	~~58,318~~	~~58,411~~	~~58,503~~	~~58,595~~	~~58,688~~
		~~B~~	~~64,838~~	~~64,941~~	~~65,045~~	~~65,149~~	~~65,253~~	~~65,357~~	~~65,461~~	~~65,565~~	~~65,669~~	~~65,773~~	~~65,877~~	~~65,980~~
	~~13~~	~~A~~	~~58,780~~	~~58,873~~	~~58,965~~	~~59,058~~	~~59,150~~	~~59,242~~	~~59,335~~	~~59,427~~	~~59,520~~	~~59,612~~	~~59,705~~	~~59,797~~
		~~B~~	~~66,084~~	~~66,188~~	~~66,292~~	~~66,396~~	~~66,500~~	~~66,604~~	~~66,708~~	~~66,812~~	~~66,916~~	~~67,020~~	~~67,123~~	~~67,227~~
	~~14~~	~~A~~	~~59,889~~	~~59,982~~	~~60,074~~	~~60,167~~	~~60,259~~	~~60,351~~	~~60,444~~	~~60,536~~	~~60,629~~	~~60,721~~	~~60,814~~	~~60,906~~
		~~B~~	~~67,331~~	~~67,435~~	~~67,539~~	~~67,643~~	~~67,747~~	~~67,851~~	~~67,955~~	~~68,059~~	~~68,163~~	~~68,266~~	~~68,370~~	~~68,474~~
	~~15~~	~~A~~	~~60,998~~	~~61,091~~	~~61,183~~	~~61,276~~	~~61,368~~	~~61,461~~	~~61,553~~	~~61,645~~	~~61,738~~	~~61,830~~	~~61,923~~	~~62,015~~
		~~B~~	~~68,578~~	~~68,682~~	~~68,786~~	~~68,890~~	~~68,994~~	~~69,098~~	~~69,202~~	~~69,305~~	~~69,409~~	~~69,513~~	~~69,617~~	~~69,721~~
	~~16~~	~~A~~	~~62,108~~	~~62,200~~	~~62,292~~	~~62,385~~	~~62,477~~	~~62,570~~	~~62,662~~	~~62,754~~	~~62,847~~	~~62,939~~	~~63,032~~	~~63,124~~
		~~B~~	~~69,825~~	~~69,929~~	~~70,033~~	~~70,137~~	~~70,241~~	~~70,345~~	~~70,448~~	~~70,552~~	~~70,656~~	~~70,760~~	~~70,864~~	~~70,968~~
	~~17~~	~~A~~	~~63,217~~	~~63,309~~	~~63,401~~	~~63,494~~	~~63,586~~	~~63,679~~	~~63,771~~	~~63,864~~	~~63,956~~	~~64,048~~	~~64,141~~	~~64,233~~
		~~B~~	~~71,072~~	~~71,176~~	~~71,280~~	~~71,384~~	~~71,488~~	~~71,591~~	~~71,695~~	~~71,799~~	~~71,903~~	~~72,007~~	~~72,111~~	~~72,215~~
	~~18~~	~~A~~	~~64,326~~											
		~~B~~	~~72,319~~											

~~Computation Formula: Weight = 1.5 X 700 (L + 40)~~

~~(L = Distance between the center of the front axle and the center of the rear axle of a given group.)~~

~~Legend:~~

~~Line A: Four tires per axle or two 14-inch wide tires. Value is the formula weight plus 5.625%.~~

~~Line B: Eight tires per axle or four 14-inch wide tires. Value is the formula weight plus 18.75%.~~

Table 3.04. Maximum Permitted Weight Computations for Overweight Axle Groups - Axle Width 8 Feet 9 Inches

Maximum allowable axle group weights determined by using the computation formula: Weight = 1.5 X 700 (L + 40), where:

L = Distance between the center of the front axle and the center of the rear axle of any group of axles within a space of 3’ 5” to 18’ 0”.

	L =	0” →	1”	2”	3”	4”	5”	6”	7”	8”	9”	10”	11”
A	3’	29,575	29,575	29,575	29,575	29,575	48,152	48,244	48,337	48,429	48,521	48,614	48,706
B	↓	33,250	33,250	33,250	33,250	33,250	54,135	54,239	54,343	54,447	54,551	54,655	54,759
A	4’	48,799	48,891	48,984	49,076	49,168	49,261	49,353	49,446	49,538	49,631	49,723	49,815
B		54,863	54,966	55,070	55,174	55,278	55,382	55,486	55,590	55,694	55,798	55,902	56,005
A	5’	49,908	50,000	50,093	50,185	50,278	50,370	50,462	50,555	50,647	50,740	50,832	50,924
B		56,109	56,213	56,317	56,421	56,525	56,629	56,733	56,837	56,941	57,045	57,148	57,252
A	6’	51,017	51,109	51,202	51,294	51,387	51,479	51,571	51,664	51,756	51,849	51,941	52,034
B		57,356	57,460	57,564	57,668	57,772	57,876	57,980	58,084	58,188	58,291	58,395	58,499
A	7’	52,126	52,218	52,311	52,403	52,496	52,588	52,680	52,773	52,865	52,958	53,050	53,143
B		58,603	58,707	58,811	58,915	59,019	59,123	59,227	59,330	59,434	59,538	59,642	59,746
A	8’	53,235	53,327	53,420	53,512	53,605	53,697	53,790	53,882	53,974	54,067	54,159	54,252
B		59,850	59,954	60,058	60,162	60,266	60,370	60,473	60,577	60,681	60,785	60,889	60,993
A	9’	54,344	54,436	54,529	54,621	54,714	54,806	54,899	54,991	55,083	55,176	55,268	55,361
B		61,097	61,201	61,305	61,409	61,513	61,616	61,720	61,824	61,928	62,032	62,136	62,240
A	10’	55,453	55,546	55,638	55,730	55,823	55,915	56,008	56,100	56,193	56,285	56,377	56,470
B		62,344	62,448	62,552	62,655	62,759	62,863	62,967	63,071	63,175	63,279	63,383	63,487
A	11’	56,562	56,655	56,747	56,839	56,932	57,024	57,117	57,209	57,302	57,394	57,486	57,579
B		63,591	63,695	63,798	63,902	64,006	64,110	64,214	64,318	64,422	64,526	64,630	64,734
A	12’	57,671	57,764	57,856	57,949	58,041	58,133	58,226	58,318	58,411	58,503	58,595	58,688
B		64,838	64,941	65,045	65,149	65,253	65,357	65,461	65,565	65,669	65,773	65,877	65,980
A	13’	58,780	58,873	58,965	59,058	59,150	59,242	59,335	59,427	59,520	59,612	59,705	59,797
B		66,084	66,188	66,292	66,396	66,500	66,604	66,708	66,812	66,916	67,020	67,123	67,227
A	14’	59,889	59,982	60,074	60,167	60,259	60,351	60,444	60,536	60,629	60,721	60,814	60,906
B		67,331	67,435	67,539	67,643	67,747	67,851	67,955	68,059	68,163	68,266	68,370	68,474
A	15’	60,998	61,091	61,183	61,276	61,368	61,461	61,553	61,645	61,738	61,830	61,923	62,015
B		68,578	68,682	68,786	68,890	68,994	69,098	69,202	69,305	69,409	69,513	69,617	69,721
A	16’	62,108	62,200	62,292	62,385	62,477	62,570	62,662	62,754	62,847	62,939	63,032	63,124
B		69,825	69,929	70,033	70,137	70,241	70,345	70,448	70,552	70,656	70,760	70,864	70,968
A	17’	63,217	63,309	63,401	63,494	63,586	63,679	63,771	63,864	63,956	64,048	64,141	64,233
B		71,072	71,176	71,280	71,384	71,488	71,591	71,695	71,799	71,903	72,007	72,111	72,215
A	18’	64,326											
B		72,319											

Legend (Tire measurement excludes any load-induced tire bulge):

Line A: Four tires per axle or two 14-inch wide tires per axle. Value is the formula weight plus 5.625%.

Line B: Eight tires per axle or four 14-inch wide tires per axle. Value is the formula weight plus 18.75%.

~~Table 3.05.~~ ~~Maximum Permitted Weight Computations: Axle Width - 9 Feet~~

~~Overweight Axle Group Chart~~

~~Distance between the center of the front axle and the center of the rear axle of a given group.~~

			~~Inches~~											
			~~0~~	~~1~~	~~2~~	~~3~~	~~4~~	~~5~~	~~6~~	~~7~~	~~8~~	~~9~~	~~10~~	~~11~~
~~Feet~~	~~3~~	~~A~~	~~30,100~~	~~30,100~~	~~30,100~~	~~30,100~~	~~30,100~~	~~30,100~~	~~49,101~~	~~49,195~~	~~49,289~~	~~49,383~~	~~49,477~~	~~49,571~~
		~~B~~	~~33,600~~	~~33,600~~	~~33,600~~	~~33,600~~	~~33,600~~	~~33,600~~	~~54,810~~	~~54,915~~	~~55,020~~	~~55,125~~	~~55,230~~	~~55,335~~
	~~4~~	~~A~~	~~49,665~~	~~49,759~~	~~49,853~~	~~49,947~~	~~50,041~~	~~50,135~~	~~50,229~~	~~50,323~~	~~50,418~~	~~50,512~~	~~50,606~~	~~50,700~~
		~~B~~	~~55,440~~	~~55,545~~	~~55,650~~	~~55,755~~	~~55,860~~	~~55,965~~	~~56,070~~	~~56,175~~	~~56,280~~	~~56,385~~	~~56,490~~	~~56,595~~
	~~5~~	~~A~~	~~50,794~~	~~50,888~~	~~50,982~~	~~51,076~~	~~51,170~~	~~51,264~~	~~51,358~~	~~51,452~~	~~51,546~~	~~51,640~~	~~51,734~~	~~51,828~~
		~~B~~	~~56,700~~	~~56,805~~	~~56,910~~	~~57,015~~	~~57,120~~	~~57,225~~	~~57,330~~	~~57,435~~	~~57,540~~	~~57,645~~	~~57,750~~	~~57,855~~
	~~6~~	~~A~~	~~51,923~~	~~52,017~~	~~52,111~~	~~52,205~~	~~52,299~~	~~52,393~~	~~52,487~~	~~52,581~~	~~52,675~~	~~52,769~~	~~52,863~~	~~52,957~~
		~~B~~	~~57,960~~	~~58,065~~	~~58,170~~	~~58,275~~	~~58,380~~	~~58,485~~	~~58,590~~	~~58,695~~	~~58,800~~	~~58,905~~	~~59,010~~	~~59,115~~
	~~7~~	~~A~~	~~53,051~~	~~53,145~~	~~53,239~~	~~53,333~~	~~53,428~~	~~53,522~~	~~53,616~~	~~53,710~~	~~53,804~~	~~53,898~~	~~53,992~~	~~54,086~~
		~~B~~	~~59,220~~	~~59,325~~	~~59,430~~	~~59,535~~	~~59,640~~	~~59,745~~	~~59,850~~	~~59,955~~	~~60,060~~	~~60,165~~	~~60,270~~	~~60,375~~
	~~8~~	~~A~~	~~54,180~~	~~54,274~~	~~54,368~~	~~54,462~~	~~54,556~~	~~54,650~~	~~54,744~~	~~54,838~~	~~54,933~~	~~55,027~~	~~55,121~~	~~55,215~~
		~~B~~	~~60,480~~	~~60,585~~	~~60,690~~	~~60,795~~	~~60,900~~	~~61,005~~	~~61,110~~	~~61,215~~	~~61,320~~	~~61,425~~	~~61,530~~	~~61,635~~
	~~9~~	~~A~~	~~55,309~~	~~55,403~~	~~55,497~~	~~55,591~~	~~55,685~~	~~55,779~~	~~55,873~~	~~55,967~~	~~56,061~~	~~56,155~~	~~56,249~~	~~56,343~~
		~~B~~	~~61,740~~	~~61,845~~	~~61,950~~	~~62,055~~	~~62,160~~	~~62,265~~	~~62,370~~	~~62,475~~	~~62,580~~	~~62,685~~	~~62,790~~	~~62,895~~
	~~10~~	~~A~~	~~56,438~~	~~56,532~~	~~56,626~~	~~56,720~~	~~56,814~~	~~56,908~~	~~57,002~~	~~57,096~~	~~57,190~~	~~57,284~~	~~57,378~~	~~57,472~~
		~~B~~	~~63,000~~	~~63,105~~	~~63,210~~	~~63,315~~	~~63,420~~	~~63,525~~	~~63,630~~	~~63,735~~	~~63,840~~	~~63,945~~	~~64,050~~	~~64,155~~
	~~11~~	~~A~~	~~57,566~~	~~57,660~~	~~57,754~~	~~57,848~~	~~57,943~~	~~58,037~~	~~58,131~~	~~58,225~~	~~58,319~~	~~58,413~~	~~58,507~~	~~58,601~~
		~~B~~	~~64,260~~	~~64,365~~	~~64,470~~	~~64,575~~	~~64,680~~	~~64,785~~	~~64,890~~	~~64,995~~	~~65,100~~	~~65,205~~	~~65,310~~	~~65,415~~
	~~12~~	~~A~~	~~58,695~~	~~58,789~~	~~58,883~~	~~58,977~~	~~59,071~~	~~59,165~~	~~59,259~~	~~59,353~~	~~59,448~~	~~59,542~~	~~59,636~~	~~59,730~~
		~~B~~	~~65,520~~	~~65,625~~	~~65,730~~	~~65,835~~	~~65,940~~	~~66,045~~	~~66,150~~	~~66,255~~	~~66,360~~	~~66,465~~	~~66,570~~	~~66,675~~
	~~13~~	~~A~~	~~59,824~~	~~59,918~~	~~60,012~~	~~60,106~~	~~60,200~~	~~60,294~~	~~60,388~~	~~60,482~~	~~60,576~~	~~60,670~~	~~60,764~~	~~60,858~~
		~~B~~	~~66,780~~	~~66,885~~	~~66,990~~	~~67,095~~	~~67,200~~	~~67,305~~	~~67,410~~	~~67,515~~	~~67,620~~	~~67,725~~	~~67,830~~	~~67,935~~
	~~14~~	~~A~~	~~60,953~~	~~61,047~~	~~61,141~~	~~61,235~~	~~61,329~~	~~61,423~~	~~61,517~~	~~61,611~~	~~61,705~~	~~61,799~~	~~61,893~~	~~61,987~~
		~~B~~	~~68,040~~	~~68,145~~	~~68,250~~	~~68,355~~	~~68,460~~	~~68,565~~	~~68,670~~	~~68,775~~	~~68,880~~	~~68,985~~	~~69,090~~	~~69,195~~
	~~15~~	~~A~~	~~62,081~~	~~62,175~~	~~62,269~~	~~62,363~~	~~62,458~~	~~62,552~~	~~62,646~~	~~62,740~~	~~62,834~~	~~62,928~~	~~63,022~~	~~63,116~~
		~~B~~	~~69,300~~	~~69,405~~	~~69,510~~	~~69,615~~	~~69,720~~	~~69,825~~	~~69,930~~	~~70,035~~	~~70,140~~	~~70,245~~	~~70,350~~	~~70,455~~
	~~16~~	~~A~~	~~63,210~~	~~63,304~~	~~63,398~~	~~63,492~~	~~63,586~~	~~63,680~~	~~63,774~~	~~63,868~~	~~63,963~~	~~64,057~~	~~64,151~~	~~64,245~~
		~~B~~	~~70,560~~	~~70,665~~	~~70,770~~	~~70,875~~	~~70,980~~	~~71,085~~	~~71,190~~	~~71,295~~	~~71,400~~	~~71,505~~	~~71,610~~	~~71,715~~
	~~17~~	~~A~~	~~64,339~~	~~64,433~~	~~64,527~~	~~64,621~~	~~64,715~~	~~64,809~~	~~64,903~~	~~64,997~~	~~65,091~~	~~65,185~~	~~65,279~~	~~65,373~~
		~~B~~	~~71,820~~	~~71,925~~	~~72,030~~	~~72,135~~	~~72,240~~	~~72,345~~	~~72,450~~	~~72,555~~	~~72,660~~	~~72,765~~	~~72,870~~	~~72,975~~
	~~18~~	~~A~~	~~65,468~~											
		~~B~~	~~73,080~~											

~~Computation Formula: Weight = 1.5 X 700 (L + 40)~~

~~(L = Distance between the center of the front axle and the center of the rear axle of a given group.)~~

~~Legend:~~

~~Line A: Four tires per axle or two 14-inch wide tires. Value is the formula weight plus 7.5%.~~

~~Line B: Eight tires per axle or four 14-inch wide tires. Value is the formula weight plus 20%.~~

Table 3.05. Maximum Permitted Weight Computations for Overweight Axle Groups - Axle Width 9 Feet 0 Inches

Maximum allowable axle group weights determined by using the computation formula: Weight = 1.5 X 700 (L + 40), where:

L = Distance between the center of the front axle and the center of the rear axle of any group of axles within a space of 3’ 5” to 18’ 0”.

	L =	0” →	1”	2”	3”	4”	5”	6”	7”	8”	9”	10”	11”
A	3’	30,100	30,100	30,100	30,100	30,100	49,007	49,101	49,195	49,289	49,383	49,477	49,571
B	↓	33,600	33,600	33,600	33,600	33,600	54,705	54,810	54,915	55,020	55,125	55,230	55,335
A	4’	49,665	49,759	49,853	49,947	50,041	50,135	50,229	50,323	50,418	50,512	50,606	50,700
B		55,440	55,545	55,650	55,755	55,860	55,965	56,070	56,175	56,280	56,385	56,490	56,595
A	5’	50,794	50,888	50,982	51,076	51,170	51,264	51,358	51,452	51,546	51,640	51,734	51,828
B		56,700	56,805	56,910	57,015	57,120	57,225	57,330	57,435	57,540	57,645	57,750	57,855
A	6’	51,923	52,017	52,111	52,205	52,299	52,393	52,487	52,581	52,675	52,769	52,863	52,957
B		57,960	58,065	58,170	58,275	58,380	58,485	58,590	58,695	58,800	58,905	59,010	59,115
A	7’	53,051	53,145	53,239	53,333	53,428	53,522	53,616	53,710	53,804	53,898	53,992	54,086
B		59,220	59,325	59,430	59,535	59,640	59,745	59,850	59,955	60,060	60,165	60,270	60,375
A	8’	54,180	54,274	54,368	54,462	54,556	54,650	54,744	54,838	54,933	55,027	55,121	55,215
B		60,480	60,585	60,690	60,795	60,900	61,005	61,110	61,215	61,320	61,425	61,530	61,635
A	9’	55,309	55,403	55,497	55,591	55,685	55,779	55,873	55,967	56,061	56,155	56,249	56,343
B		61,740	61,845	61,950	62,055	62,160	62,265	62,370	62,475	62,580	62,685	62,790	62,895
A	10’	56,438	56,532	56,626	56,720	56,814	56,908	57,002	57,096	57,190	57,284	57,378	57,472
B		63,000	63,105	63,210	63,315	63,420	63,525	63,630	63,735	63,840	63,945	64,050	64,155
A	11’	57,566	57,660	57,754	57,848	57,943	58,037	58,131	58,225	58,319	58,413	58,507	58,601
B		64,260	64,365	64,470	64,575	64,680	64,785	64,890	64,995	65,100	65,205	65,310	65,415
A	12’	58,695	58,789	58,883	58,977	59,071	59,165	59,259	59,353	59,448	59,542	59,636	59,730
B		65,520	65,625	65,730	65,835	65,940	66,045	66,150	66,255	66,360	66,465	66,570	66,675
A	13’	59,824	59,918	60,012	60,106	60,200	60,294	60,388	60,482	60,576	60,670	60,764	60,858
B		66,780	66,885	66,990	67,095	67,200	67,305	67,410	67,515	67,620	67,725	67,830	67,935
A	14’	60,953	61,047	61,141	61,235	61,329	61,423	61,517	61,611	61,705	61,799	61,893	61,987
B		68,040	68,145	68,250	68,355	68,460	68,565	68,670	68,775	68,880	68,985	69,090	69,195
A	15’	62,081	62,175	62,269	62,363	62,458	62,552	62,646	62,740	62,834	62,928	63,022	63,116
B		69,300	69,405	69,510	69,615	69,720	69,825	69,930	70,035	70,140	70,245	70,350	70,455
A	16’	63,210	63,304	63,398	63,492	63,586	63,680	63,774	63,868	63,963	64,057	64,151	64,245
B		70,560	70,665	70,770	70,875	70,980	71,085	71,190	71,295	71,400	71,505	71,610	71,715
A	17’	64,339	64,433	64,527	64,621	64,715	64,809	64,903	64,997	65,091	65,185	65,279	65,373
B		71,820	71,925	72,030	72,135	72,240	72,345	72,450	72,555	72,660	72,765	72,870	72,975
A	18’	65,468											
B		73,080											

Legend (Tire measurement excludes any load-induced tire bulge):

Line A: Four tires per axle or two 14-inch wide tires per axle. Value is the formula weight plus 7.5%.

Line B: Eight tires per axle or four 14-inch wide tires per axle. Value is the formula weight plus 20%.

~~Table 3.06. Maximum Permitted Weight Computations: Axle Width - 9 Feet 3 Inches~~
~~Overweight Axle Group Chart~~
~~Distance between the center of the front axle and the center of the rear axle of a given group.~~

			~~Inches~~											
			~~0~~	~~1~~	~~2~~	~~3~~	~~4~~	~~5~~	~~6~~	~~7~~	~~8~~	~~9~~	~~10~~	~~11~~
~~Feet~~	~~3~~	~~A~~	~~30,625~~	~~30,625~~	~~30,625~~	~~30,625~~	~~30,625~~	~~30,625~~	~~49,957~~	~~50,053~~	~~50,148~~	~~50,244~~	~~50,340~~	~~50,436~~
		~~B~~	~~33,950~~	~~33,950~~	~~33,950~~	~~33,950~~	~~33,950~~	~~33,950~~	~~55,381~~	~~55,487~~	~~55,593~~	~~55,699~~	~~55,805~~	~~55,911~~
	~~4~~	~~A~~	~~50,531~~	~~50,627~~	~~50,723~~	~~50,818~~	~~50,914~~	~~51,010~~	~~51,105~~	~~51,201~~	~~51,297~~	~~51,393~~	~~51,488~~	~~51,584~~
		~~B~~	~~56,018~~	~~56,124~~	~~56,230~~	~~56,336~~	~~56,442~~	~~56,548~~	~~56,654~~	~~56,760~~	~~56,866~~	~~56,972~~	~~57,078~~	~~57,185~~
	~~5~~	~~A~~	~~51,680~~	~~51,775~~	~~51,871~~	~~51,967~~	~~52,063~~	~~52,158~~	~~52,254~~	~~52,350~~	~~52,445~~	~~52,541~~	~~52,637~~	~~52,732~~
		~~B~~	~~57,291~~	~~57,397~~	~~57,503~~	~~57,609~~	~~57,715~~	~~57,821~~	~~57,927~~	~~58,033~~	~~58,139~~	~~58,245~~	~~58,352~~	~~58,458~~
	~~6~~	~~A~~	~~52,828~~	~~52,924~~	~~53,020~~	~~53,115~~	~~53,211~~	~~53,307~~	~~53,402~~	~~53,498~~	~~53,594~~	~~53,689~~	~~53,785~~	~~53,881~~
		~~B~~	~~58,564~~	~~58,670~~	~~58,776~~	~~58,882~~	~~58,988~~	~~59,094~~	~~59,200~~	~~59,306~~	~~59,413~~	~~59,519~~	~~59,625~~	~~59,731~~
	~~7~~	~~A~~	~~53,977~~	~~54,072~~	~~54,168~~	~~54,264~~	~~54,359~~	~~54,455~~	~~54,551~~	~~54,646~~	~~54,742~~	~~54,838~~	~~54,934~~	~~55,029~~
		~~B~~	~~59,837~~	~~59,943~~	~~60,049~~	~~60,155~~	~~60,261~~	~~60,367~~	~~60,473~~	~~60,580~~	~~60,686~~	~~60,792~~	~~60,898~~	~~61,004~~
	~~8~~	~~A~~	~~55,125~~	~~55,221~~	~~55,316~~	~~55,412~~	~~55,508~~	~~55,604~~	~~55,699~~	~~55,795~~	~~55,891~~	~~55,986~~	~~56,082~~	~~56,178~~
		~~B~~	~~61,110~~	~~61,216~~	~~61,322~~	~~61,428~~	~~61,534~~	~~61,640~~	~~61,747~~	~~61,853~~	~~61,959~~	~~62,065~~	~~62,171~~	~~62,277~~
	~~9~~	~~A~~	~~56,273~~	~~56,369~~	~~56,465~~	~~56,561~~	~~56,656~~	~~56,752~~	~~56,848~~	~~56,943~~	~~57,039~~	~~57,135~~	~~57,230~~	~~57,326~~
		~~B~~	~~62,383~~	~~62,489~~	~~62,595~~	~~62,701~~	~~62,808~~	~~62,914~~	~~63,020~~	~~63,126~~	~~63,232~~	~~63,338~~	~~63,444~~	~~63,550~~
	~~10~~	~~A~~	~~57,422~~	~~57,518~~	~~57,613~~	~~57,709~~	~~57,805~~	~~57,900~~	~~57,996~~	~~58,092~~	~~58,188~~	~~58,283~~	~~58,379~~	~~58,475~~
		~~B~~	~~63,656~~	~~63,762~~	~~63,868~~	~~63,975~~	~~64,081~~	~~64,187~~	~~64,293~~	~~64,399~~	~~64,505~~	~~64,611~~	~~64,717~~	~~64,823~~
	~~11~~	~~A~~	~~58,570~~	~~58,666~~	~~58,762~~	~~58,857~~	~~58,953~~	~~59,049~~	~~59,145~~	~~59,240~~	~~59,336~~	~~59,432~~	~~59,527~~	~~59,623~~
		~~B~~	~~64,929~~	~~65,035~~	~~65,142~~	~~65,248~~	~~65,354~~	~~65,460~~	~~65,566~~	~~65,672~~	~~65,778~~	~~65,884~~	~~65,990~~	~~66,096~~
	~~12~~	~~A~~	~~59,719~~	~~59,814~~	~~59,910~~	~~60,006~~	~~60,102~~	~~60,197~~	~~60,293~~	~~60,389~~	~~60,484~~	~~60,580~~	~~60,676~~	~~60,771~~
		~~B~~	~~66,203~~	~~66,309~~	~~66,415~~	~~66,521~~	~~66,627~~	~~66,733~~	~~66,839~~	~~66,945~~	~~67,051~~	~~67,157~~	~~67,263~~	~~67,370~~
	~~13~~	~~A~~	~~60,867~~	~~60,963~~	~~61,059~~	~~61,154~~	~~61,250~~	~~61,346~~	~~61,441~~	~~61,537~~	~~61,633~~	~~61,729~~	~~61,824~~	~~61,920~~
		~~B~~	~~67,476~~	~~67,582~~	~~67,688~~	~~67,794~~	~~67,900~~	~~68,006~~	~~68,112~~	~~68,218~~	~~68,324~~	~~68,430~~	~~68,537~~	~~68,643~~
	~~14~~	~~A~~	~~62,016~~	~~62,111~~	~~62,207~~	~~62,303~~	~~62,398~~	~~62,494~~	~~62,590~~	~~62,686~~	~~62,781~~	~~62,877~~	~~62,973~~	~~63,068~~
		~~B~~	~~68,749~~	~~68,855~~	~~68,961~~	~~69,067~~	~~69,173~~	~~69,279~~	~~69,385~~	~~69,491~~	~~69,598~~	~~69,704~~	~~69,810~~	~~69,916~~
	~~15~~	~~A~~	~~63,164~~	~~63,260~~	~~63,355~~	~~63,451~~	~~63,547~~	~~63,643~~	~~63,738~~	~~63,834~~	~~63,930~~	~~64,025~~	~~64,121~~	~~64,217~~
		~~B~~	~~70,022~~	~~70,128~~	~~70,234~~	~~70,340~~	~~70,446~~	~~70,552~~	~~70,658~~	~~70,765~~	~~70,871~~	~~70,977~~	~~71,083~~	~~71,189~~
	~~16~~	~~A~~	~~64,313~~	~~64,408~~	~~64,504~~	~~64,600~~	~~64,695~~	~~64,791~~	~~64,887~~	~~64,982~~	~~65,078~~	~~65,174~~	~~65,270~~	~~65,365~~
		~~B~~	~~71,295~~	~~71,401~~	~~71,507~~	~~71,613~~	~~71,719~~	~~71,825~~	~~71,932~~	~~72,038~~	~~72,144~~	~~72,250~~	~~72,356~~	~~72,462~~
	~~17~~	~~A~~	~~65,461~~	~~65,557~~	~~65,652~~	~~65,748~~	~~65,844~~	~~65,939~~	~~66,035~~	~~66,131~~	~~66,227~~	~~66,322~~	~~66,418~~	~~66,514~~
		~~B~~	~~72,568~~	~~72,674~~	~~72,780~~	~~72,886~~	~~72,993~~	~~73,099~~	~~73,205~~	~~73,311~~	~~73,417~~	~~73,523~~	~~73,629~~	~~73,735~~
	~~18~~	~~A~~	~~66,609~~											
		~~B~~	~~73,841~~											

~~Computation Formula: Weight = 1.5 X 700 (L + 40)~~
~~(L = Distance between the center of the front axle and the center of the rear axle of a given group.)~~

~~Legend:~~
~~Line A: Four tires per axle or two 14-inch wide tires. Value is the formula weight plus 9.375%.~~
~~Line B: Eight tires per axle or four 14-inch wide tires. Value is the formula weight plus 21.25%.~~

Table 3.06. Maximum Permitted Weight Computations for Overweight Axle Groups - Axle Width 9 Feet 3 Inches

Maximum allowable axle group weights determined by using the computation formula: Weight = 1.5 X 700 (L + 40), where:

L = Distance between the center of the front axle and the center of the rear axle of any group of axles within a space of 3’ 5” to 18’ 0”.

	L =	0” →	1”	2”	3”	4”	5”	6”	7”	8”	9”	10”	11”
A	3’ ↓	30,625	30,625	30,625	30,625	30,625	49,861	49,957	50,053	50,148	50,244	50,340	50,436
B		33,950	33,950	33,950	33,950	33,950	55,275	55,381	55,487	55,593	55,699	55,805	55,911
A	4’	50,531	50,627	50,723	50,818	50,914	51,010	51,105	51,201	51,297	51,393	51,488	51,584
B		56,018	56,124	56,230	56,336	56,442	56,548	56,654	56,760	56,866	56,972	57,078	57,185
A	5’	51,680	51,775	51,871	51,967	52,063	52,158	52,254	52,350	52,445	52,541	52,637	52,732
B		57,291	57,397	57,503	57,609	57,715	57,821	57,927	58,033	58,139	58,245	58,352	58,458
A	6’	52,828	52,924	53,020	53,115	53,211	53,307	53,402	53,498	53,594	53,689	53,785	53,881
B		58,564	58,670	58,776	58,882	58,988	59,094	59,200	59,306	59,413	59,519	59,625	59,731
A	7’	53,977	54,072	54,168	54,264	54,359	54,455	54,551	54,646	54,742	54,838	54,934	55,029
B		59,837	59,943	60,049	60,155	60,261	60,367	60,473	60,580	60,686	60,792	60,898	61,004
A	8’	55,125	55,221	55,316	55,412	55,508	55,604	55,699	55,795	55,891	55,986	56,082	56,178
B		61,110	61,216	61,322	61,428	61,534	61,640	61,747	61,853	61,959	62,065	62,171	62,277
A	9’	56,273	56,369	56,465	56,561	56,656	56,752	56,848	56,943	57,039	57,135	57,230	57,326
B		62,383	62,489	62,595	62,701	62,808	62,914	63,020	63,126	63,232	63,338	63,444	63,550
A	10’	57,422	57,518	57,613	57,709	57,805	57,900	57,996	58,092	58,188	58,283	58,379	58,475
B		63,656	63,762	63,868	63,975	64,081	64,187	64,293	64,399	64,505	64,611	64,717	64,823
A	11’	58,570	58,666	58,762	58,857	58,953	59,049	59,145	59,240	59,336	59,432	59,527	59,623
B		64,929	65,035	65,142	65,248	65,354	65,460	65,566	65,672	65,778	65,884	65,990	66,096
A	12’	59,719	59,814	59,910	60,006	60,102	60,197	60,293	60,389	60,484	60,580	60,676	60,771
B		66,203	66,309	66,415	66,521	66,627	66,733	66,839	66,945	67,051	67,157	67,263	67,370
A	13’	60,867	60,963	61,059	61,154	61,250	61,346	61,441	61,537	61,633	61,729	61,824	61,920
B		67,476	67,582	67,688	67,794	67,900	68,006	68,112	68,218	68,324	68,430	68,537	68,643
A	14’	62,016	62,111	62,207	62,303	62,398	62,494	62,590	62,686	62,781	62,877	62,973	63,068
B		68,749	68,855	68,961	69,067	69,173	69,279	69,385	69,491	69,598	69,704	69,810	69,916
A	15’	63,164	63,260	63,355	63,451	63,547	63,643	63,738	63,834	63,930	64,025	64,121	64,217
B		70,022	70,128	70,234	70,340	70,446	70,552	70,658	70,765	70,871	70,977	71,083	71,189
A	16’	64,313	64,408	64,504	64,600	64,695	64,791	64,887	64,982	65,078	65,174	65,270	65,365
B		71,295	71,401	71,507	71,613	71,719	71,825	71,932	72,038	72,144	72,250	72,356	72,462
A	17’	65,461	65,557	65,652	65,748	65,844	65,939	66,035	66,131	66,227	66,322	66,418	66,514
B		72,568	72,674	72,780	72,886	72,993	73,099	73,205	73,311	73,417	73,523	73,629	73,735
A	18’	66,609											
B		73,841											

Legend (Tire measurement excludes any load-induced tire bulge):

Line A: Four tires per axle or two 14-inch wide tires per axle. Value is the formula weight plus 9.375%.

Line B: Eight tires per axle or four 14-inch wide tires per axle. Value is the formula weight plus 21.25%.

~~Table 3.07. Maximum Permitted Weight Computations: Axle Width - 9 Feet 6 Inches~~
~~Overweight Axle Group Chart~~
~~Distance between the center of the front axle and the center of the rear axle of a given group.~~

			~~Inches~~											
			~~0~~	~~1~~	~~2~~	~~3~~	~~4~~	~~5~~	~~6~~	~~7~~	~~8~~	~~9~~	~~10~~	~~11~~
~~Feet~~	~~3~~	~~A~~	~~31,150~~	~~31,150~~	~~31,150~~	~~31,150~~	~~31,150~~	~~31,150~~	~~50,813~~	~~50,911~~	~~51,008~~	~~51,105~~	~~51,203~~	~~51,300~~
		~~B~~	~~34,300~~	~~34,000~~	~~34,300~~	~~34,300~~	~~34,300~~	~~34,300~~	~~55,952~~	~~56,059~~	~~56,166~~	~~56,273~~	~~56,381~~	~~56,488~~
	~~4~~	~~A~~	~~51,398~~	~~51,495~~	~~51,592~~	~~51,690~~	~~51,787~~	~~51,884~~	~~51,982~~	~~52,079~~	~~52,176~~	~~52,274~~	~~52,371~~	~~52,468~~
		~~B~~	~~56,595~~	~~56,702~~	~~56,809~~	~~56,917~~	~~57,024~~	~~57,131~~	~~57,238~~	~~57,345~~	~~57,453~~	~~57,560~~	~~57,667~~	~~57,774~~
	~~5~~	~~A~~	~~52,566~~	~~52,663~~	~~52,760~~	~~52,858~~	~~52,955~~	~~53,052~~	~~53,150~~	~~53,247~~	~~53,344~~	~~53,442~~	~~53,539~~	~~53,636~~
		~~B~~	~~57,881~~	~~57,988~~	~~58,096~~	~~58,203~~	~~58,310~~	~~58,417~~	~~58,524~~	~~58,632~~	~~58,739~~	~~58,846~~	~~58,953~~	~~59,060~~
	~~6~~	~~A~~	~~53,734~~	~~53,831~~	~~53,928~~	~~54,026~~	~~54,123~~	~~54,220~~	~~54,318~~	~~54,415~~	~~54,513~~	~~54,610~~	~~54,707~~	~~54,805~~
		~~B~~	~~59,168~~	~~59,275~~	~~59,382~~	~~59,489~~	~~59,596~~	~~59,703~~	~~59,811~~	~~59,918~~	~~60,025~~	~~60,132~~	~~60,239~~	~~60,347~~
	~~7~~	~~A~~	~~54,902~~	~~54,999~~	~~55,097~~	~~55,194~~	~~55,291~~	~~55,389~~	~~55,486~~	~~55,583~~	~~55,681~~	~~55,778~~	~~55,875~~	~~55,973~~
		~~B~~	~~60,454~~	~~60,561~~	~~60,668~~	~~60,775~~	~~60,883~~	~~60,990~~	~~61,097~~	~~61,204~~	~~61,311~~	~~61,418~~	~~61,526~~	~~61,633~~
	~~8~~	~~A~~	~~56,070~~	~~56,167~~	~~56,265~~	~~56,362~~	~~56,459~~	~~56,557~~	~~56,654~~	~~56,751~~	~~56,849~~	~~56,946~~	~~57,043~~	~~57,141~~
		~~B~~	~~61,740~~	~~61,847~~	~~61,954~~	~~62,062~~	~~62,169~~	~~62,276~~	~~62,383~~	~~62,490~~	~~62,598~~	~~62,705~~	~~62,812~~	~~62,919~~
	~~9~~	~~A~~	~~57,238~~	~~57,335~~	~~57,433~~	~~57,530~~	~~57,628~~	~~57,725~~	~~57,822~~	~~57,920~~	~~58,017~~	~~58,114~~	~~58,212~~	~~58,309~~
		~~B~~	~~63,026~~	~~63,133~~	~~63,241~~	~~63,348~~	~~63,455~~	~~63,562~~	~~63,669~~	~~63,777~~	~~63,884~~	~~63,991~~	~~64,098~~	~~64,205~~
	~~10~~	~~A~~	~~58,406~~	~~58,504~~	~~58,601~~	~~58,698~~	~~58,796~~	~~58,893~~	~~58,990~~	~~59,088~~	~~59,185~~	~~59,282~~	~~59,380~~	~~59,477~~
		~~B~~	~~64,313~~	~~64,420~~	~~64,527~~	~~64,634~~	~~64,741~~	~~64,848~~	~~64,956~~	~~65,063~~	~~65,170~~	~~65,277~~	~~65,384~~	~~65,492~~
	~~11~~	~~A~~	~~59,574~~	~~59,672~~	~~59,769~~	~~59,866~~	~~59,964~~	~~60,061~~	~~60,158~~	~~60,256~~	~~60,353~~	~~60,450~~	~~60,548~~	~~60,645~~
		~~B~~	~~65,599~~	~~65,706~~	~~65,813~~	~~65,920~~	~~66,028~~	~~66,135~~	~~66,242~~	~~66,349~~	~~66,456~~	~~66,563~~	~~66,671~~	~~66,778~~
	~~12~~	~~A~~	~~60,743~~	~~60,840~~	~~60,937~~	~~61,035~~	~~61,132~~	~~61,229~~	~~61,327~~	~~61,424~~	~~61,521~~	~~61,619~~	~~61,716~~	~~61,813~~
		~~B~~	~~66,885~~	~~66,992~~	~~67,099~~	~~67,207~~	~~67,314~~	~~67,421~~	~~67,528~~	~~67,635~~	~~67,743~~	~~67,850~~	~~67,957~~	~~68,064~~
	~~13~~	~~A~~	~~61,911~~	~~62,008~~	~~62,105~~	~~62,203~~	~~62,300~~	~~62,397~~	~~62,495~~	~~62,592~~	~~62,689~~	~~62,787~~	~~62,884~~	~~62,981~~
		~~B~~	~~68,171~~	~~68,278~~	~~68,386~~	~~68,493~~	~~68,600~~	~~68,707~~	~~68,814~~	~~68,922~~	~~69,029~~	~~69,136~~	~~69,243~~	~~69,350~~
	~~14~~	~~A~~	~~63,079~~	~~63,176~~	~~63,273~~	~~63,371~~	~~63,468~~	~~63,565~~	~~63,663~~	~~63,760~~	~~63,858~~	~~63,955~~	~~64,052~~	~~64,150~~
		~~B~~	~~69,458~~	~~69,565~~	~~69,672~~	~~69,779~~	~~69,886~~	~~69,993~~	~~70,101~~	~~70,208~~	~~70,315~~	~~70,422~~	~~70,529~~	~~70,637~~
	~~15~~	~~A~~	~~64,247~~	~~64,344~~	~~64,442~~	~~64,539~~	~~64,636~~	~~64,734~~	~~64,831~~	~~64,928~~	~~65,026~~	~~65,123~~	~~65,220~~	~~65,318~~
		~~B~~	~~70,744~~	~~70,851~~	~~70,958~~	~~71,065~~	~~71,173~~	~~71,280~~	~~71,387~~	~~71,494~~	~~71,601~~	~~71,708~~	~~71,816~~	~~71,923~~
	~~16~~	~~A~~	~~65,415~~	~~65,512~~	~~65,610~~	~~65,707~~	~~65,804~~	~~65,902~~	~~65,999~~	~~66,096~~	~~66,194~~	~~66,291~~	~~66,388~~	~~66,486~~
		~~B~~	~~72,030~~	~~72,137~~	~~72,244~~	~~72,352~~	~~72,459~~	~~72,566~~	~~72,673~~	~~72,780~~	~~72,888~~	~~72,995~~	~~73,102~~	~~73,209~~
	~~17~~	~~A~~	~~66,583~~	~~66,680~~	~~66,778~~	~~66,875~~	~~66,973~~	~~67,070~~	~~67,167~~	~~67,265~~	~~67,362~~	~~67,459~~	~~67,557~~	~~67,654~~
		~~B~~	~~73,316~~	~~73,423~~	~~73,531~~	~~73,638~~	~~73,745~~	~~73,852~~	~~73,959~~	~~74,067~~	~~74,174~~	~~74,281~~	~~74,388~~	~~74,495~~
	~~18~~	~~A~~	~~67,751~~											
		~~B~~	~~74,603~~											

~~Computation Formula: Weight = 1.5 X 700 (L + 40)~~
~~(L = Distance between the center of the front axle and the center of the rear axle of a given group.)~~

~~Legend:~~
~~Line A: Four tires per axle or two 14-inch wide tires. Value is the formula weight plus 11.25%.~~
~~Line B: Eight tires per axle or four 14-inch wide tires. Value is the formula weight plus 22.5%.~~

Table 3.07. Maximum Permitted Weight Computations for Overweight Axle Groups - Axle Width 9 Feet 6 Inches

Maximum allowable axle group weights determined by using the computation formula: Weight = 1.5 X 700 (L + 40), where:

L = Distance between the center of the front axle and the center of the rear axle of any group of axles within a space of 3’ 5” to 18’ 0”.

	L =	0” →	1”	2”	3”	4”	5”	6”	7”	8”	9”	10”	11”
A	3’	31,150	31,150	31,150	31,150	31,150	50,716	50,813	50,911	51,008	51,105	51,203	51,300
B	↓	34,300	34,000	34,300	34,300	34,300	55,845	55,952	56,059	56,166	56,273	56,381	56,488
A	4’	51,398	51,495	51,592	51,690	51,787	51,884	51,982	52,079	52,176	52,274	52,371	52,468
B		56,595	56,702	56,809	56,917	57,024	57,131	57,238	57,345	57,453	57,560	57,667	57,774
A	5’	52,566	52,663	52,760	52,858	52,955	53,052	53,150	53,247	53,344	53,442	53,539	53,636
B		57,881	57,988	58,096	58,203	58,310	58,417	58,524	58,632	58,739	58,846	58,953	59,060
A	6’	53,734	53,831	53,928	54,026	54,123	54,220	54,318	54,415	54,513	54,610	54,707	54,805
B		59,168	59,275	59,382	59,489	59,596	59,703	59,811	59,918	60,025	60,132	60,239	60,347
A	7’	54,902	54,999	55,097	55,194	55,291	55,389	55,486	55,583	55,681	55,778	55,875	55,973
B		60,454	60,561	60,668	60,775	60,883	60,990	61,097	61,204	61,311	61,418	61,526	61,633
A	8’	56,070	56,167	56,265	56,362	56,459	56,557	56,654	56,751	56,849	56,946	57,043	57,141
B		61,740	61,847	61,954	62,062	62,169	62,276	62,383	62,490	62,598	62,705	62,812	62,919
A	9’	57,238	57,335	57,433	57,530	57,628	57,725	57,822	57,920	58,017	58,114	58,212	58,309
B		63,026	63,133	63,241	63,348	63,455	63,562	63,669	63,777	63,884	63,991	64,098	64,205
A	10’	58,406	58,504	58,601	58,698	58,796	58,893	58,990	59,088	59,185	59,282	59,380	59,477
B		64,313	64,420	64,527	64,634	64,741	64,848	64,956	65,063	65,170	65,277	65,384	65,492
A	11’	59,574	59,672	59,769	59,866	59,964	60,061	60,158	60,256	60,353	60,450	60,548	60,645
B		65,599	65,706	65,813	65,920	66,028	66,135	66,242	66,349	66,456	66,563	66,671	66,778
A	12’	60,743	60,840	60,937	61,035	61,132	61,229	61,327	61,424	61,521	61,619	61,716	61,813
B		66,885	66,992	67,099	67,207	67,314	67,421	67,528	67,635	67,743	67,850	67,957	68,064
A	13’	61,911	62,008	62,105	62,203	62,300	62,397	62,495	62,592	62,689	62,787	62,884	62,981
B		68,171	68,278	68,386	68,493	68,600	68,707	68,814	68,922	69,029	69,136	69,243	69,350
A	14’	63,079	63,176	63,273	63,371	63,468	63,565	63,663	63,760	63,858	63,955	64,052	64,150
B		69,458	69,565	69,672	69,779	69,886	69,993	70,101	70,208	70,315	70,422	70,529	70,637
A	15’	64,247	64,344	64,442	64,539	64,636	64,734	64,831	64,928	65,026	65,123	65,220	65,318
B		70,744	70,851	70,958	71,065	71,173	71,280	71,387	71,494	71,601	71,708	71,816	71,923
A	16’	65,415	65,512	65,610	65,707	65,804	65,902	65,999	66,096	66,194	66,291	66,388	66,486
B		72,030	72,137	72,244	72,352	72,459	72,566	72,673	72,780	72,888	72,995	73,102	73,209
A	17’	66,583	66,680	66,778	66,875	66,973	67,070	67,167	67,265	67,362	67,459	67,557	67,654
B		73,316	73,423	73,531	73,638	73,745	73,852	73,959	74,067	74,174	74,281	74,388	74,495
A	18’	67,751											
B		74,603											

Legend (Tire measurement excludes any load-induced tire bulge):

Line A: Four tires per axle or two 14-inch wide tires per axle. Value is the formula weight plus 11.25%.

Line B: Eight tires per axle or four 14-inch wide tires per axle. Value is the formula weight plus 22.5%.

~~Table 3.08.~~ ~~Maximum Permitted Weight Computations: Axle Width - 9 Feet 9 Inches~~
~~Overweight Axle Group Chart~~
~~Distance between the center of the front axle and the center of the rear axle of a given group.~~

			~~Inches~~											
			~~0~~	~~1~~	~~2~~	~~3~~	~~4~~	~~5~~	~~6~~	~~7~~	~~8~~	~~9~~	~~10~~	~~11~~
~~Feet~~	~~3~~	~~A~~	~~31,675~~	~~31,675~~	~~31,675~~	~~31,675~~	~~31,675~~	~~31,675~~	~~51,670~~	~~51,769~~	~~51,868~~	~~51,967~~	~~52,066~~	~~52,165~~
		~~B~~	~~34,650~~	~~34,650~~	~~34,650~~	~~34,650~~	~~34,650~~	~~34,650~~	~~56,523~~	~~56,631~~	~~56,739~~	~~56,848~~	~~56,956~~	~~57,064~~
	~~4~~	~~A~~	~~52,264~~	~~52,363~~	~~52,462~~	~~52,561~~	~~52,660~~	~~52,759~~	~~52,858~~	~~52,957~~	~~53,056~~	~~53,155~~	~~53,254~~	~~53,353~~
		~~B~~	~~57,173~~	~~57,281~~	~~57,389~~	~~57,497~~	~~57,606~~	~~57,714~~	~~57,822~~	~~57,930~~	~~58,039~~	~~58,147~~	~~58,255~~	~~58,364~~
	~~5~~	~~A~~	~~53,452~~	~~53,551~~	~~53,650~~	~~53,749~~	~~53,848~~	~~53,946~~	~~54,045~~	~~54,144~~	~~54,243~~	~~54,342~~	~~54,441~~	~~54,540~~
		~~B~~	~~58,472~~	~~58,580~~	~~58,688~~	~~58,797~~	~~58,905~~	~~59,013~~	~~59,122~~	~~59,230~~	~~59,338~~	~~59,446~~	~~59,555~~	~~59,663~~
	~~6~~	~~A~~	~~54,639~~	~~54,738~~	~~54,837~~	~~54,936~~	~~55,035~~	~~55,134~~	~~55,233~~	~~55,332~~	~~55,431~~	~~55,530~~	~~55,629~~	~~55,728~~
		~~B~~	~~59,771~~	~~59,880~~	~~59,988~~	~~60,096~~	~~60,204~~	~~60,313~~	~~60,421~~	~~60,529~~	~~60,638~~	~~60,746~~	~~60,854~~	~~60,962~~
	~~7~~	~~A~~	~~55,827~~	~~55,926~~	~~56,025~~	~~56,124~~	~~56,223~~	~~56,322~~	~~56,421~~	~~56,520~~	~~56,619~~	~~56,718~~	~~56,817~~	~~56,916~~
		~~B~~	~~61,071~~	~~61,179~~	~~61,287~~	~~61,395~~	~~61,504~~	~~61,612~~	~~61,720~~	~~61,829~~	~~61,937~~	~~62,045~~	~~62,153~~	~~62,262~~
	~~8~~	~~A~~	~~57,015~~	~~57,114~~	~~57,213~~	~~57,312~~	~~57,411~~	~~57,510~~	~~57,609~~	~~57,708~~	~~57,807~~	~~57,906~~	~~58,005~~	~~58,104~~
		~~B~~	~~62,370~~	~~62,478~~	~~62,587~~	~~62,695~~	~~62,803~~	~~62,911~~	~~63,020~~	~~63,128~~	~~63,236~~	~~63,345~~	~~63,453~~	~~63,561~~
	~~9~~	~~A~~	~~58,203~~	~~58,302~~	~~58,401~~	~~58,500~~	~~58,599~~	~~58,698~~	~~58,797~~	~~58,896~~	~~58,995~~	~~59,094~~	~~59,193~~	~~59,292~~
		~~B~~	~~63,669~~	~~63,778~~	~~63,886~~	~~63,994~~	~~64,103~~	~~64,211~~	~~64,319~~	~~64,427~~	~~64,536~~	~~64,644~~	~~64,752~~	~~64,860~~
	~~10~~	~~A~~	~~59,391~~	~~59,490~~	~~59,589~~	~~59,688~~	~~59,787~~	~~59,886~~	~~59,985~~	~~60,084~~	~~60,183~~	~~60,281~~	~~60,380~~	~~60,479~~
		~~B~~	~~64,969~~	~~65,077~~	~~65,185~~	~~65,294~~	~~65,402~~	~~65,510~~	~~65,618~~	~~65,727~~	~~65,835~~	~~65,943~~	~~66,052~~	~~66,160~~
	~~11~~	~~A~~	~~60,578~~	~~60,677~~	~~60,776~~	~~60,875~~	~~60,974~~	~~61,073~~	~~61,172~~	~~61,271~~	~~61,370~~	~~61,469~~	~~61,568~~	~~61,667~~
		~~B~~	~~66,268~~	~~66,376~~	~~66,485~~	~~66,593~~	~~66,701~~	~~66,810~~	~~66,918~~	~~67,026~~	~~67,134~~	~~67,243~~	~~67,351~~	~~67,459~~
	~~12~~	~~A~~	~~61,766~~	~~61,865~~	~~61,964~~	~~62,063~~	~~62,162~~	~~62,261~~	~~62,360~~	~~62,459~~	~~62,558~~	~~62,657~~	~~62,756~~	~~62,855~~
		~~B~~	~~67,568~~	~~67,676~~	~~67,784~~	~~67,892~~	~~68,001~~	~~68,109~~	~~68,217~~	~~68,325~~	~~68,434~~	~~68,542~~	~~68,650~~	~~68,759~~
	~~13~~	~~A~~	~~62,954~~	~~63,053~~	~~63,152~~	~~63,251~~	~~63,350~~	~~63,449~~	~~63,548~~	~~63,647~~	~~63,746~~	~~63,845~~	~~63,944~~	~~64,043~~
		~~B~~	~~68,867~~	~~68,975~~	~~69,083~~	~~69,192~~	~~69,300~~	~~69,408~~	~~69,517~~	~~69,625~~	~~69,733~~	~~69,841~~	~~69,950~~	~~70,058~~
	~~14~~	~~A~~	~~64,142~~	~~64,241~~	~~64,340~~	~~64,439~~	~~64,538~~	~~64,637~~	~~64,736~~	~~64,835~~	~~64,934~~	~~65,033~~	~~65,132~~	~~65,231~~
		~~B~~	~~70,166~~	~~70,275~~	~~70,383~~	~~70,491~~	~~70,599~~	~~70,708~~	~~70,816~~	~~70,924~~	~~71,033~~	~~71,141~~	~~71,249~~	~~71,357~~
	~~15~~	~~A~~	~~65,330~~	~~65,429~~	~~65,528~~	~~65,627~~	~~65,726~~	~~65,825~~	~~65,924~~	~~66,023~~	~~66,122~~	~~66,221~~	~~66,320~~	~~66,419~~
		~~B~~	~~71,466~~	~~71,574~~	~~71,682~~	~~71,790~~	~~71,899~~	~~72,007~~	~~72,115~~	~~72,224~~	~~72,332~~	~~72,440~~	~~72,548~~	~~72,657~~
	~~16~~	~~A~~	~~66,518~~	~~66,616~~	~~66,715~~	~~66,814~~	~~66,913~~	~~67,012~~	~~67,111~~	~~67,210~~	~~67,309~~	~~67,408~~	~~67,507~~	~~67,606~~
		~~B~~	~~72,765~~	~~72,873~~	~~72,982~~	~~73,090~~	~~73,198~~	~~73,306~~	~~73,415~~	~~73,523~~	~~73,631~~	~~73,740~~	~~73,848~~	~~73,956~~
	~~17~~	~~A~~	~~67,705~~	~~67,804~~	~~67,903~~	~~68,002~~	~~68,101~~	~~68,200~~	~~68,299~~	~~68,398~~	~~68,497~~	~~68,596~~	~~68,695~~	~~68,794~~
		~~B~~	~~74,064~~	~~74,173~~	~~74,281~~	~~74,389~~	~~74,498~~	~~74,606~~	~~74,714~~	~~74,822~~	~~74,931~~	~~75,039~~	~~75,147~~	~~75,255~~
	~~18~~	~~A~~	~~68,893~~											
		~~B~~	~~75,364~~											

~~Computation Formula: Weight = 1.5 X 700 (L + 40)~~
~~(L = Distance between the center of the front axle and the center of the rear axle of a given group.)~~

~~Legend:~~
~~Line A: Four tires per axle or two 14-inch wide tires. Value is the formula weight plus 13.125%.~~
~~Line B: Eight tires per axle or four 14-inch wide tires. Value is the formula weight plus 23.75%.~~

Table 3.08. Maximum Permitted Weight Computations for Overweight Axle Groups - Axle Width 9 Feet 9 Inches

Maximum allowable axle group weights determined by using the computation formula: Weight = 1.5 X 700 (L + 40), where:

L = Distance between the center of the front axle and the center of the rear axle of any group of axles within a space of 3' 5" to 18' 0".

	L =	0" →	1"	2"	3"	4"	5"	6"	7"	8"	9"	10"	11"
A	3'	31,675	31,675	31,675	31,675	31,675	51,571	51,670	51,769	51,868	51,967	52,066	52,165
B	↓	34,650	34,650	34,650	34,650	34,650	56,415	56,523	56,631	56,739	56,848	56,956	57,064
A	4'	52,264	52,363	52,462	52,561	52,660	52,759	52,858	52,957	53,056	53,155	53,254	53,353
B		57,173	57,281	57,389	57,497	57,606	57,714	57,822	57,930	58,039	58,147	58,255	58,364
A	5'	53,452	53,551	53,650	53,749	53,848	53,946	54,045	54,144	54,243	54,342	54,441	54,540
B		58,472	58,580	58,688	58,797	58,905	59,013	59,122	59,230	59,338	59,446	59,555	59,663
A	6'	54,639	54,738	54,837	54,936	55,035	55,134	55,233	55,332	55,431	55,530	55,629	55,728
B		59,771	59,880	59,988	60,096	60,204	60,313	60,421	60,529	60,638	60,746	60,854	60,962
A	7'	55,827	55,926	56,025	56,124	56,223	56,322	56,421	56,520	56,619	56,718	56,817	56,916
B		61,071	61,179	61,287	61,395	61,504	61,612	61,720	61,829	61,937	62,045	62,153	62,262
A	8'	57,015	57,114	57,213	57,312	57,411	57,510	57,609	57,708	57,807	57,906	58,005	58,104
B		62,370	62,478	62,587	62,695	62,803	62,911	63,020	63,128	63,236	63,345	63,453	63,561
A	9'	58,203	58,302	58,401	58,500	58,599	58,698	58,797	58,896	58,995	59,094	59,193	59,292
B		63,669	63,778	63,886	63,994	64,103	64,211	64,319	64,427	64,536	64,644	64,752	64,860
A	10'	59,391	59,490	59,589	59,688	59,787	59,886	59,985	60,084	60,183	60,281	60,380	60,479
B		64,969	65,077	65,185	65,294	65,402	65,510	65,618	65,727	65,835	65,943	66,052	66,160
A	11'	60,578	60,677	60,776	60,875	60,974	61,073	61,172	61,271	61,370	61,469	61,568	61,667
B		66,268	66,376	66,485	66,593	66,701	66,810	66,918	67,026	67,134	67,243	67,351	67,459
A	12'	61,766	61,865	61,964	62,063	62,162	62,261	62,360	62,459	62,558	62,657	62,756	62,855
B		67,568	67,676	67,784	67,892	68,001	68,109	68,217	68,325	68,434	68,542	68,650	68,759
A	13'	62,954	63,053	63,152	63,251	63,350	63,449	63,548	63,647	63,746	63,845	63,944	64,043
B		68,867	68,975	69,083	69,192	69,300	69,408	69,517	69,625	69,733	69,841	69,950	70,058
A	14'	64,142	64,241	64,340	64,439	64,538	64,637	64,736	64,835	64,934	65,033	65,132	65,231
B		70,166	70,275	70,383	70,491	70,599	70,708	70,816	70,924	71,033	71,141	71,249	71,357
A	15'	65,330	65,429	65,528	65,627	65,726	65,825	65,924	66,023	66,122	66,221	66,320	66,419
B		71,466	71,574	71,682	71,790	71,899	72,007	72,115	72,224	72,332	72,440	72,548	72,657
A	16'	66,518	66,616	66,715	66,814	66,913	67,012	67,111	67,210	67,309	67,408	67,507	67,606
B		72,765	72,873	72,982	73,090	73,198	73,306	73,415	73,523	73,631	73,740	73,848	73,956
A	17'	67,705	67,804	67,903	68,002	68,101	68,200	68,299	68,398	68,497	68,596	68,695	68,794
B		74,064	74,173	74,281	74,389	74,498	74,606	74,714	74,822	74,931	75,039	75,147	75,255
A	18'	68,893											
B		75,364											

Legend (Tire measurement excludes any load-induced tire bulge):

Line A: Four tires per axle or two 14-inch wide tires per axle. Value is the formula weight plus 13.125%.

Line B: Eight tires per axle or four 14-inch wide tires per axle. Value is the formula weight plus 23.75%.

~~Table 3.09.~~ ~~Maximum Permitted Weight Computations: Axle Width - 10 Feet~~

~~Overweight Axle Group Chart~~

~~Distance between the center of the front axle and the center of the rear axle of a given group.~~

			~~Inches~~											
			~~0~~	~~1~~	~~2~~	~~3~~	~~4~~	~~5~~	~~6~~	~~7~~	~~8~~	~~9~~	~~10~~	~~11~~
~~Feet~~	~~3~~	~~A~~	~~32,200~~	~~32,200~~	~~32,200~~	~~32,200~~	~~32,200~~	~~32,200~~	~~52,526~~	~~52,627~~	~~52,728~~	~~52,828~~	~~52,929~~	~~53,029~~
		~~B~~	~~35,000~~	~~35,000~~	~~35,000~~	~~35,000~~	~~35,000~~	~~35,000~~	~~57,094~~	~~57,203~~	~~57,313~~	~~57,422~~	~~57,531~~	~~57,641~~
	~~4~~	~~A~~	~~53,130~~	~~53,231~~	~~53,331~~	~~53,432~~	~~53,533~~	~~53,633~~	~~53,734~~	~~53,834~~	~~53,935~~	~~54,036~~	~~54,136~~	~~54,237~~
		~~B~~	~~57,750~~	~~57,859~~	~~57,969~~	~~58,078~~	~~58,188~~	~~58,297~~	~~58,406~~	~~58,516~~	~~58,625~~	~~58,734~~	~~58,844~~	~~58,953~~
	~~5~~	~~A~~	~~54,338~~	~~54,438~~	~~54,539~~	~~54,639~~	~~54,740~~	~~54,841~~	~~54,941~~	~~55,042~~	~~55,143~~	~~55,243~~	~~55,344~~	~~55,444~~
		~~B~~	~~59,063~~	~~59,172~~	~~59,281~~	~~59,391~~	~~59,500~~	~~59,609~~	~~59,719~~	~~59,828~~	~~59,938~~	~~60,047~~	~~60,156~~	~~60,266~~
	~~6~~	~~A~~	~~55,545~~	~~55,646~~	~~55,746~~	~~55,847~~	~~55,948~~	~~56,048~~	~~56,149~~	~~56,249~~	~~56,350~~	~~56,451~~	~~56,551~~	~~56,652~~
		~~B~~	~~60,375~~	~~60,484~~	~~60,594~~	~~60,703~~	~~60,813~~	~~60,922~~	~~61,031~~	~~61,141~~	~~61,250~~	~~61,359~~	~~61,469~~	~~61,578~~
	~~7~~	~~A~~	~~56,753~~	~~56,853~~	~~56,954~~	~~57,054~~	~~57,155~~	~~57,256~~	~~57,356~~	~~57,457~~	~~57,558~~	~~57,658~~	~~57,759~~	~~57,859~~
		~~B~~	~~61,688~~	~~61,797~~	~~61,906~~	~~62,016~~	~~62,125~~	~~62,234~~	~~62,344~~	~~62,453~~	~~62,563~~	~~62,672~~	~~62,781~~	~~62,891~~
	~~8~~	~~A~~	~~57,960~~	~~58,061~~	~~58,161~~	~~58,262~~	~~58,363~~	~~58,463~~	~~58,564~~	~~58,664~~	~~58,765~~	~~58,866~~	~~58,966~~	~~59,067~~
		~~B~~	~~63,000~~	~~63,109~~	~~63,219~~	~~63,328~~	~~63,438~~	~~63,547~~	~~63,656~~	~~63,766~~	~~63,875~~	~~63,984~~	~~64,094~~	~~64,203~~
	~~9~~	~~A~~	~~59,168~~	~~59,268~~	~~59,369~~	~~59,469~~	~~59,570~~	~~59,671~~	~~59,771~~	~~59,872~~	~~59,973~~	~~60,073~~	~~60,174~~	~~60,274~~
		~~B~~	~~64,313~~	~~64,422~~	~~64,531~~	~~64,641~~	~~64,750~~	~~64,859~~	~~64,969~~	~~65,078~~	~~65,188~~	~~65,297~~	~~65,406~~	~~65,516~~
	~~10~~	~~A~~	~~60,375~~	~~60,476~~	~~60,576~~	~~60,677~~	~~60,778~~	~~60,878~~	~~60,979~~	~~61,079~~	~~61,180~~	~~61,281~~	~~61,381~~	~~61,482~~
		~~B~~	~~65,625~~	~~65,734~~	~~65,844~~	~~65,953~~	~~66,063~~	~~66,172~~	~~66,281~~	~~66,391~~	~~66,500~~	~~66,609~~	~~66,719~~	~~66,828~~
	~~11~~	~~A~~	~~61,583~~	~~61,683~~	~~61,784~~	~~61,884~~	~~61,985~~	~~62,086~~	~~62,186~~	~~62,287~~	~~62,388~~	~~62,488~~	~~62,589~~	~~62,689~~
		~~B~~	~~66,938~~	~~67,047~~	~~67,156~~	~~67,266~~	~~67,375~~	~~67,484~~	~~67,594~~	~~67,703~~	~~67,813~~	~~67,922~~	~~68,031~~	~~68,141~~
	~~12~~	~~A~~	~~62,790~~	~~62,891~~	~~62,991~~	~~63,092~~	~~63,193~~	~~63,293~~	~~63,394~~	~~63,494~~	~~63,595~~	~~63,696~~	~~63,796~~	~~63,897~~
		~~B~~	~~68,250~~	~~68,359~~	~~68,469~~	~~68,578~~	~~68,688~~	~~68,797~~	~~68,906~~	~~69,016~~	~~69,125~~	~~69,234~~	~~69,344~~	~~69,453~~
	~~13~~	~~A~~	~~63,998~~	~~64,098~~	~~64,199~~	~~64,299~~	~~64,400~~	~~64,501~~	~~64,601~~	~~64,702~~	~~64,803~~	~~64,903~~	~~65,004~~	~~65,104~~
		~~B~~	~~69,563~~	~~69,672~~	~~69,781~~	~~69,891~~	~~70,000~~	~~70,109~~	~~70,219~~	~~70,328~~	~~70,438~~	~~70,547~~	~~70,656~~	~~70,766~~
	~~14~~	~~A~~	~~65,205~~	~~65,306~~	~~65,406~~	~~65,507~~	~~65,608~~	~~65,708~~	~~65,809~~	~~65,909~~	~~66,010~~	~~66,111~~	~~66,211~~	~~66,312~~
		~~B~~	~~70,875~~	~~70,984~~	~~71,094~~	~~71,203~~	~~71,313~~	~~71,422~~	~~71,531~~	~~71,641~~	~~71,750~~	~~71,859~~	~~71,969~~	~~72,078~~
	~~15~~	~~A~~	~~66,413~~	~~66,513~~	~~66,614~~	~~66,714~~	~~66,815~~	~~66,916~~	~~67,016~~	~~67,117~~	~~67,218~~	~~67,318~~	~~67,419~~	~~67,519~~
		~~B~~	~~72,188~~	~~72,297~~	~~72,406~~	~~72,516~~	~~72,625~~	~~72,734~~	~~72,844~~	~~72,953~~	~~73,063~~	~~73,172~~	~~73,281~~	~~73,391~~
	~~16~~	~~A~~	~~67,620~~	~~67,721~~	~~67,821~~	~~67,922~~	~~68,023~~	~~68,123~~	~~68,224~~	~~68,324~~	~~68,425~~	~~68,526~~	~~68,626~~	~~68,727~~
		~~B~~	~~73,500~~	~~73,609~~	~~73,719~~	~~73,828~~	~~73,938~~	~~74,047~~	~~74,156~~	~~74,266~~	~~74,375~~	~~74,484~~	~~74,594~~	~~74,703~~
	~~17~~	~~A~~	~~68,828~~	~~68,928~~	~~69,029~~	~~69,129~~	~~69,230~~	~~69,331~~	~~69,431~~	~~69,532~~	~~69,633~~	~~69,733~~	~~69,834~~	~~69,934~~
		~~B~~	~~74,813~~	~~74,922~~	~~75,031~~	~~75,141~~	~~75,250~~	~~75,359~~	~~75,469~~	~~75,578~~	~~75,688~~	~~75,797~~	~~75,906~~	~~76,016~~
	~~18~~	~~A~~	~~70,035~~											
		~~B~~	~~76,125~~											

~~Computation Formula: Weight = 1.5 X 700 (L + 40)~~

~~(L = Distance between the center of the front axle and the center of the rear axle of a given group.)~~

~~Legend:~~

~~Line A: Four tires per axle or two 14-inch wide tires. Value is the formula weight plus 15%.~~

~~Line B: Eight tires per axle or four 14-inch wide tires. Value is the formula weight plus 25%.~~

Table 3.09. Maximum Permitted Weight Computations for Overweight Axle Groups - Axle Width 10 Feet 0 Inches

Maximum allowable axle group weights determined by using the computation formula: Weight = 1.5 X 700 (L + 40), where:

L = Distance between the center of the front axle and the center of the rear axle of any group of axles within a space of 3’ 5” to 18’ 0”.

	L =	0” →	1”	2”	3”	4”	5”	6”	7”	8”	9”	10”	11”
A	3’	32,200	32,200	32,200	32,200	32,200	52,426	52,526	52,627	52,728	52,828	52,929	53,029
B	↓	35,000	35,000	35,000	35,000	35,000	56,984	57,094	57,203	57,313	57,422	57,531	57,641
A	4’	53,130	53,231	53,331	53,432	53,533	53,633	53,734	53,834	53,935	54,036	54,136	54,237
B		57,750	57,859	57,969	58,078	58,188	58,297	58,406	58,516	58,625	58,734	58,844	58,953
A	5’	54,338	54,438	54,539	54,639	54,740	54,841	54,941	55,042	55,143	55,243	55,344	55,444
B		59,063	59,172	59,281	59,391	59,500	59,609	59,719	59,828	59,938	60,047	60,156	60,266
A	6’	55,545	55,646	55,746	55,847	55,948	56,048	56,149	56,249	56,350	56,451	56,551	56,652
B		60,375	60,484	60,594	60,703	60,813	60,922	61,031	61,141	61,250	61,359	61,469	61,578
A	7’	56,753	56,853	56,954	57,054	57,155	57,256	57,356	57,457	57,558	57,658	57,759	57,859
B		61,688	61,797	61,906	62,016	62,125	62,234	62,344	62,453	62,563	62,672	62,781	62,891
A	8’	57,960	58,061	58,161	58,262	58,363	58,463	58,564	58,664	58,765	58,866	58,966	59,067
B		63,000	63,109	63,219	63,328	63,438	63,547	63,656	63,766	63,875	63,984	64,094	64,203
A	9’	59,168	59,268	59,369	59,469	59,570	59,671	59,771	59,872	59,973	60,073	60,174	60,274
B		64,313	64,422	64,531	64,641	64,750	64,859	64,969	65,078	65,188	65,297	65,406	65,516
A	10’	60,375	60,476	60,576	60,677	60,778	60,878	60,979	61,079	61,180	61,281	61,381	61,482
B		65,625	65,734	65,844	65,953	66,063	66,172	66,281	66,391	66,500	66,609	66,719	66,828
A	11’	61,583	61,683	61,784	61,884	61,985	62,086	62,186	62,287	62,388	62,488	62,589	62,689
B		66,938	67,047	67,156	67,266	67,375	67,484	67,594	67,703	67,813	67,922	68,031	68,141
A	12’	62,790	62,891	62,991	63,092	63,193	63,293	63,394	63,494	63,595	63,696	63,796	63,897
B		68,250	68,359	68,469	68,578	68,688	68,797	68,906	69,016	69,125	69,234	69,344	69,453
A	13’	63,998	64,098	64,199	64,299	64,400	64,501	64,601	64,702	64,803	64,903	65,004	65,104
B		69,563	69,672	69,781	69,891	70,000	70,109	70,219	70,328	70,438	70,547	70,656	70,766
A	14’	65,205	65,306	65,406	65,507	65,608	65,708	65,809	65,909	66,010	66,111	66,211	66,312
B		70,875	70,984	71,094	71,203	71,313	71,422	71,531	71,641	71,750	71,859	71,969	72,078
A	15’	66,413	66,513	66,614	66,714	66,815	66,916	67,016	67,117	67,218	67,318	67,419	67,519
B		72,188	72,297	72,406	72,516	72,625	72,734	72,844	72,953	73,063	73,172	73,281	73,391
A	16’	67,620	67,721	67,821	67,922	68,023	68,123	68,224	68,324	68,425	68,526	68,626	68,727
B		73,500	73,609	73,719	73,828	73,938	74,047	74,156	74,266	74,375	74,484	74,594	74,703
A	17’	68,828	68,928	69,029	69,129	69,230	69,331	69,431	69,532	69,633	69,733	69,834	69,934
B		74,813	74,922	75,031	75,141	75,250	75,359	75,469	75,578	75,688	75,797	75,906	76,016
A	18’	70,035											
B		76,125											

Legend (Tire measurement excludes any load-induced tire bulge):

Line A: Four tires per axle or two 14-inch wide tires per axle. Value is the formula weight plus 15%.

Line B: Eight tires per axle or four 14-inch wide tires per axle. Value is the formula weight plus 25%.

~~**Illustration 3. Overweight Axle Groups**~~ **Repealed**

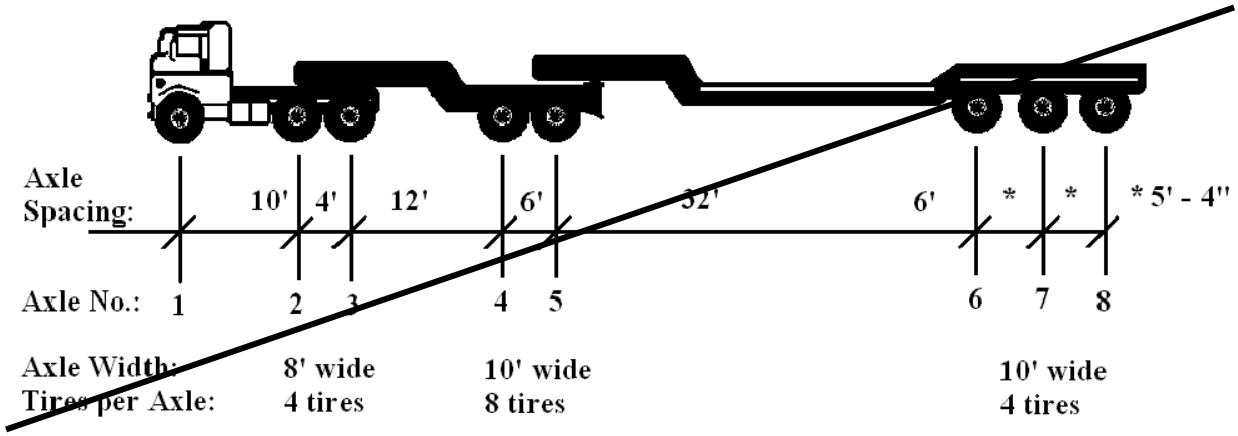

~~The axle group weights shown on the previous tables are maximum weights allowed on any combination of axles within the distance between the front and rear axle of a given group to a maximum of 18 feet. The values in Table 3.01 line "A" are an expansion of the formula W = 1.5 x 700 (L + 40), where L is the distance between the centers of the front and rear axles of a group. The values in line "B" and in the remaining tables are computed by applying the percentages provided in the Table footnotes and are intended to increase the allowable weights based on wider axles and increased number of tires. Measured axle widths shall be rounded down to the nearest 3" increment when determining the appropriate table to use.~~

~~(Axle 1) limited to 28,000 lbs for single alone~~
~~(Axle 2 + 3); L = 4'; W = 46,200 lbs for tandem alone~~
~~(Axle 1) + (Axle 2 + 3); L = 14'; W = 56,700 lbs for the group~~
~~(Axle 4 + 5); L = 6'; W = 60,375 lbs (25% increase for 10' wide - 8 tires)~~
~~(Axle 2 + 3 + 4); L = 16'; W = (2/3 x 58,800) + (1/3 x 73,500) = 63,700 lbs~~
~~(Axle 3 + 4 + 5); L = 18'; W = (1/3 x 60,900) + (2/3 x 76,125) = 71,050 lbs~~
~~(Axle 3 + 4); L = 12'; W = (1/2 x 54,600) + (1/2 x 68,250) = 61,425 lbs~~
~~(Axle 6 + 7 +8); L = 10' 8"; W = 61,180 (15% increase for 10' wide - 4 tires)~~

~~Note: The Department shall review each possible axle group that can exist within an 18-foot distance. Axle group configurations of different widths or numbers of tires shall be prorated within the total group load in determining any allowable increase over the basic formula weight.~~

R17-6-412. Highway-specific Restrictions, Requirements, Conditions, and Allowances

A. The Department may temporarily prohibit operation of an oversize or overweight envelope or special permitted vehicle, or impose additional weight restrictions, requirements, conditions, or allowances, if safe transport on a highway under the Department's jurisdiction is unavoidably affected by a temporary construction or maintenance project, incident, or emergency situation ~~as indicated on the Department's web site at www.az511.gov~~ recorded on the Arizona Traveler Information System az511.gov.

B. The Department shall post to its web site at www.azdot.gov all updates to any temporary or permanent highway restrictions, requirements, conditions, or allowances affecting a route listed under Table 4 as appropriate for safe transport of an oversize or overweight vehicle or vehicle and load.

C. A permittee and driver shall check the Department's web site at www.azdot.gov daily for updates to any temporary or permanent highway restrictions, requirements, conditions, or allowances affecting safe transport of an oversize or overweight vehicle or vehicle and load on a route listed under Table 4.

D. A permittee or driver of an oversize or overweight vehicle or load shall not access a route listed under Table 4 unless operating in full compliance with all indicated permanent highway restrictions, requirements, conditions and allowances, including any additional instructions indicated on the envelope or special permit issued by the Department.

E. When more than two escort vehicles are required on a route listed under Table 4 due to excess height, length, width, or weight, only two law enforcement escorts are required to ensure the public safety. Multiples of two law enforcement escorts are not required for each excess dimension unless specifically required under a class C special permit.

~~E.~~F. A permittee and driver shall additionally check daily for up-to-date information on traffic conditions, road closures, and restrictions by:

1. Accessing the ~~Department's Traffic Operations Center online at www.az511.gov~~ Arizona Traveler Information System at az511.gov; or
2. Contacting a highway project engineer at the ADOT district office identified on the Department's web site ~~at www.azdot.gov/Highways~~ as the office responsible for oversight of the permittee's applicable transport route.

~~F.~~G. The information contained in Table 4 reflects highway restrictions, requirements, conditions, and allowances applicable on the effective date of this Section. ~~Real-time updates published~~ The Department shall publish real-time updates as an addendum to Table 4 ~~are posted by the Department to~~ and make those updates available on its web site at www.azdot.gov, the Arizona Central Commercial Permits ~~office, and~~ Office, Class C ~~Maintenance~~ Statewide Permit Services, and all Arizona Port of Entry locations. This information is critical for ensuring safe transport of an oversize or overweight vehicle or load and is subject to immediate change as provided under this Section.

Table 4. Permanent Highway Restrictions, Requirements, Conditions, and Allowances

Route	Restriction Location (MP = Milepost)	Transport Subject to:	Height	Length	Width	Weight (in lbs)
Escort requirements: F = front escort, R = rear escort, F/R = front and rear escort, and LE = law enforcement escort						
~~Interstate 8~~	~~MP 0.00 (California State Line) to MP 144.55 (Vekol Road TI)~~	~~R17-6-405; R17-6-406; R17-6-408; R17-6-409~~			~~Over 14' - 16' = R~~	
Interstate 8	MP 0.00 (California State Line) to MP 21.06 (Dome Valley Road TI)	R17-6-402; R17-6-403			Over 14' - 16' = R	
Interstate 8	MP 21.06 Westbound (Dome Valley Road TI Underpass - Structure 1325)	R17-6-402; R17-6-403	15' 11"		Over 14' - 16' = R	
Interstate 8	MP 21.06 (Dome Valley Road TI) to MP 30.80 (Avenue 29E - Wellton TI)	R17-6-402; R17-6-403			Over 14' - 16' = R	
Interstate 8	MP 30.80 Westbound (Avenue 29E - Wellton Underpass - Structure 1332)	R17-6-402; R17-6-403	15' 11"		Over 14' - 16' = R	

Route	Restriction Location (MP = Milepost)	Transport Subject to:	Height	Length	Width	Weight (in lbs)
Escort requirements: F = front escort, R = rear escort, F/R = front and rear escort, and LE = law enforcement escort						
Interstate 8	MP 30.80 (Avenue 29E - Wellton TI) to MP 144.55 (Vekol Valley Road TI)	R17-6-402; R17-6-403			Over 14’ - 16’ = R	
Interstate 8	MP 144.55 (Vekol Valley Road Underpass - Structure 550)	~~R17-6-405; R17-6-406; R17-6-408; R17-6-409~~ R17-6-402; R17-6-403	15’ 11”		Over 14’ - 16’ = R	
Interstate 8	MP 144.55 (Vekol Valley Road TI) to MP 151.70 (Junction SR 84 ~~TI~~)	~~R17-6-405; R17-6-406; R17-6-408; R17-6-409~~ R17-6-402; R17-6-403			Over 14’ - 16’ = R	
Interstate 8	MP 151.70 Eastbound (Junction SR 84 ~~TI~~ Underpass - Structure 1063)	~~R17-6-405; R17-6-406; R17-6-408; R17-6-409~~ R17-6-402; R17-6-403	~~15’ 11”~~ 15’ 10”		Over 14’ - 16’ = R	
~~Interstate 8~~	~~MP 151.70 (SR 84 TI) to MP 162.50 (Murphy Road)~~	~~R17-6-405; R17-6-406; R17-6-408; R17-6-409~~			~~Over 14’ - 16’ = R~~	
Interstate 8	MP 151.70 (Junction SR 84) to MP 161.60 (Stanfield Road TI)	R17-6-402; R17-6-403			Over 14’ - 16’ = R	
Interstate 8	MP 161.60 Eastbound (Stanfield Road Underpass - Structure 1090)	R17-6-402; R17-6-403	15’ 10”		Over 14’ - 16’ = R	
Interstate 8	MP 161.60 (Stanfield Road TI) to MP 162.50 (Murphy Road TI)	R17-6-402; R17-6-403			Over 14’ - 16’ = R	
Interstate 8	MP 162.50 Westbound (Murphy Road Underpass - Structure 1091)	~~R17-6-405; R17-6-406; R17-6-408; R17-6-409~~ R17-6-402; R17-6-403	15’ 11”		Over 14’ - 16’ = R	
~~Interstate 8~~	~~MP 162.50 (Murphy Road) to MP 172.55 (Thornton Road)~~	~~R17-6-405; R17-6-406; R17-6-408; R17-6-409~~			~~Over 14’ - 16’ = R~~	
Interstate 8	MP 162.50 (Murphy Road TI) to MP 164.50 (Russell Road TI)	R17-6-402; R17-6-403			Over 14’ - 16’ = R	
Interstate 8	MP 164.50 Eastbound (Russell Road Underpass - Structure 1094)	R17-6-402; R17-6-403	15’ 10”		Over 14’ - 16’ = R	
Interstate 8	MP 164.50 (Russell Road TI) to MP 167.50 (Montgomery Road TI)	R17-6-402; R17-6-403			Over 14’ - 16’ = R	
Interstate 8	MP 167.50 Eastbound (Montgomery Road Underpass - Structure 1140)	R17-6-402; R17-6-403	15’ 10”		Over 14’ - 16’ = R	
Interstate 8	MP 167.50 (Montgomery Road TI to MP 172.55 (Thornton Road TI)	R17-6-402; R17-6-403			Over 14’ - 16’ = R	
Interstate 8	MP 172.55 Eastbound (Thornton Road Underpass - Structure 1196)	~~R17-6-405; R17-6-406; R17-6-408; R17-6-409~~ R17-6-402; R17-6-403	~~15’ 8”~~ 15’ 10”		Over 14’ - 16’ = R	
Interstate 8	MP 172.55 Westbound (Thornton Road Underpass - Structure 1196)	~~R17-6-405; R17-6-406; R17-6-408; R17-6-409~~ R17-6-402; R17-6-403	~~15’ 7”~~ 15’ 8”		Over 14’ - 16’ = R	
Interstate 8	MP 172.55 (Thornton Road TI) to MP 173.53 (Chuichu Road)	~~R17-6-405; R17-6-406; R17-6-408; R17-6-409~~ R17-6-402; R17-6-403			Over 14’ - 16’ = R	
Interstate 8	MP 173.53 Eastbound (Chuichu Road Underpass - Structure 1197)	~~R17-6-405; R17-6-406; R17-6-408; R17-6-409~~ R17-6-402; R17-6-403	~~15’ 10”~~ 15’ 9”		Over 14’ - 16’ = R	
Interstate 8	MP 173.53 (Chuichu Road) to MP 178.70 (Junction I-10)	~~R17-6-405; R17-6-406; R17-6-408; R17-6-409~~ R17-6-402; R17-6-403			Over 14’ - 16’ = R	
Interstate 10	MP 0.00 (California State Line) to MP 5.84 (Tom Wells Road TI)	~~R17-6-405; R17-6-406; R17-6-408; R17-6-409~~ R17-6-402; R17-6-403			Over 14’ - 16’ = R	

Route	Restriction Location (MP = Milepost)	Transport Subject to:	Height	Length	Width	Weight (in lbs)
Escort requirements: F = front escort, R = rear escort, F/R = front and rear escort, and LE = law enforcement escort						
Interstate 10	MP 5.84 Eastbound (Tom Wells Road Underpass - Structure 767)	~~R17-6-405; R17-6-406; R17-6-408; R17-6-409~~ R17-6-402; R17-6-403	15’ 10”		Over 14’ - 16’ = R	
Interstate 10	MP 5.84 Westbound (Tom Wells Road Underpass - Structure 767)	R17-6-402; R17-6-403	15’ 11”		Over 14’ - 16’ = R	
Interstate 10	MP 5.84 (Tom Wells Road TI) to MP 17.50 (Junction SB 10 - West Quartzsite ~~TI~~ Blvd)	~~R17-6-405; R17-6-406; R17-6-408; R17-6-409~~ R17-6-402; R17-6-403			Over 14’ - 16’ = R	
Interstate 10	MP 17.50 (SB 10 Underpass - West Quartzsite Blvd ~~Underpass~~ - Structure 826)	~~R17-6-405; R17-6-406; R17-6-408; R17-6-409~~ R17-6-402; R17-6-403	15’ 8”		Over 14’ - 16’ = R	
Interstate 10	MP 17.50 (Junction SB 10 - West Quartzsite ~~TI~~ Blvd) to MP 26.65 (Gold Nugget ~~Mountain~~ Road TI)	~~R17-6-405; R17-6-406; R17-6-408; R17-6-409~~ R17-6-402; R17-6-403			Over 14’ - 16’ = R	
Interstate 10	MP 26.65 Westbound (Gold Nugget ~~Mountain~~ Road Underpass - Structure769)	~~R17-6-405; R17-6-406; R17-6-408; R17-6-409~~ R17-6-402; R17-6-403	15’ 10”		Over 14’ - 16’ = R	
~~Interstate 10~~	~~MP 26.65 (Gold Nugget Mountain) to MP 33.78 (Ramsey Mine TI)~~	~~R17-6-405; R17-6-406; R17-6-408; R17-6-409~~			~~Over 14’ - 16’ = R~~	
~~Interstate 10~~	~~MP 33.78 Eastbound (Ramsey Mine Underpass - Structure 1202)~~	~~R17-6-405; R17-6-406; R17-6-408; R17-6-409~~	~~15’ 11”~~		~~Over 14’ - 16’ = R~~	
~~Interstate 10~~	~~MP 33.78 (Ramsey Mine TI) to MP 45.34 (Vicksburg Road TI)~~	~~R17-6-405; R17-6-406; R17-6-408; R17-6-409~~			~~Over 14’ - 16’ = R~~	
Interstate 10	MP 26.65 (Gold Nugget Road TI) to MP 45.34 (Vicksburg Road TI)	R17-6-402; R17-6-403			Over 14’ - 16’ = R	
Interstate 10	MP 45.34 (Vicksburg Road Underpass - Structure 1207)	~~R17-6-405; R17-6-406; R17-6-408; R17-6-409~~ R17-6-402; R17-6-403	15’ 7”		Over 14’ - 16’ = R	
Interstate 10	MP 45.34 (Vicksburg Road TI) to MP 69.60 (Avenue 75E TI)	~~R17-6-405; R17-6-406; R17-6-408; R17-6-409~~ R17-6-402; R17-6-403			Over 14’ - 16’ = R	
Interstate 10	MP 69.60 Westbound (Avenue 75E Underpass - Structure 1283)	~~R17-6-405; R17-6-406; R17-6-408; R17-6-409~~ R17-6-402; R17-6-403	15’ 11”		Over 14’ - 16’ = R	
Interstate 10	MP 69.60 (Avenue 75E TI) to MP 81.21 (Salome Road TI)	~~R17-6-405; R17-6-406; R17-6-408; R17-6-409~~ R17-6-402; R17-6-403			Over 14’ - 16’ = R	
Interstate 10	MP 81.21 Eastbound (Salome Road Underpass - Structure 1209)	~~R17-6-405; R17-6-406; R17-6-408; R17-6-409~~ R17-6-402; R17-6-403	~~15’ 11”~~ 15’ 10”		Over 14’ - 16’ = R	
Interstate 10	MP 81.21 Westbound (Salome Road Underpass - Structure 1209)	~~R17-6-405; R17-6-406; R17-6-408; R17-6-409~~ R17-6-402; R17-6-403	15’ 9”		Over 14’ - 16’ = R	
Interstate 10	MP 81.21 (Salome Road TI) to MP 101.40 (355th Avenue)	~~R17-6-405; R17-6-406; R17-6-408; R17-6-409~~ R17-6-402; R17-6-403			Over 14’ - 16’ = R	
Interstate 10	MP 101.40 Westbound (355th Avenue Underpass - Structure 1647)	~~R17-6-405; R17-6-406; R17-6-408; R17-6-409~~ R17-6-402; R17-6-403	15’ 8”		Over 14’ - 16’ = R	
Interstate 10	MP 101.40 (355th Avenue) to MP 133.98 (Junction SR 101 Loop)	~~R17-6-405; R17-6-406; R17-6-408; R17-6-409~~ R17-6-402; R17-6-403			Over 14’ - 16’ = R	
~~Interstate 10~~	~~MP 133.98 (Junction SR 101) to MP 139.65 (51st Avenue TI)~~	~~R17-6-404; R17-6-405; R17-6-406; R17-6-408; R17-6-409~~			~~Over 14’ - 16’ = R~~	

Route	Restriction Location (MP = Milepost)	Transport Subject to:	Height	Length	Width	Weight (in lbs)
Escort requirements: F = front escort, R = rear escort, F/R = front and rear escort, and LE = law enforcement escort						
~~Interstate 10~~	~~MP 139.65 Eastbound (51st Avenue Underpass - Structure 1930)~~	~~R17-6-404; R17-6-405; R17-6-406; R17-6-408; R17-6-409~~	~~15' 11"~~		~~Over 14' - 16' = R~~	
~~Interstate 10~~	~~MP 139.65 (51st Avenue TI) to MP 145.19 (Deck Park Tunnel)~~	~~R17-6-404; R17-6-405; R17-6-406; R17-6-408; R17-6-409~~			~~Over 14' - 16' = R~~	
~~Interstate 10~~	~~MP 145.19 Eastbound (Deck Park Tunnel)~~	~~R17-6-404; R17-6-405; R17-6-406; R17-6-408; R17-6-409~~	~~15' 7"~~		~~Over 14' - 16' = R~~	
~~Interstate 10~~	~~MP 145.19 (Deck Park Tunnel) to MP 147.21 (SR 51 TI)~~	~~R17-6-404; R17-6-405; R17-6-406; R17-6-408; R17-6-409~~			~~Over 14' - 16' = R~~	
~~Interstate 10~~	~~MP 147.21 (SR 51 Underpass)~~	~~R17-6-404; R17-6-405; R17-6-406; R17-6-408; R17-6-409~~	~~15' 2"~~		~~Over 14' - 16' = R~~	
~~Interstate 10~~	~~MP 147.21 (SR 51 TI) to MP 161.35 (Junction SR 202, Santan)~~	~~R17-6-404; R17-6-405; R17-6-406; R17-6-408; R17-6-409~~			~~Over 14' - 16' = R~~	
Interstate 10	MP 133.98 (Junction SR 101 Loop) to MP 140.65 (43rd Avenue TI)	R17-6-402; R17-6-403; R17-6-404			Over 14' - 16' = R	
Interstate 10	MP 140.65 Eastbound (43rd Avenue Underpass - Structure 1931)	R17-6-402; R17-6-403; R17-6-404	15' 11"		Over 14' - 16' = R	
Interstate 10	MP 140.65 (43rd Avenue TI) to MP 161.35 (Junction SR 202 Loop, Santan)	R17-6-402; R17-6-403; R17-6-404			Over 14' - 16' = R	
Interstate 10	MP 161.35 (Junction SR 202 Loop, Santan) to MP 167.47 (Riggs Road TI)	~~R17-6-405; R17-6-406; R17-6-408; R17-6-409~~ R17-6-402; R17-6-403			Over 14' - 16' = R	
Interstate 10	MP 167.47 (Riggs Road Underpass - Structure 1148)	~~R17-6-405; R17-6-406; R17-6-408; R17-6-409~~ R17-6-402; R17-6-403	15' 9"		Over 14' - 16' = R	
Interstate 10	MP 167.47 (Riggs Road TI) to MP 169.85 (Goodyear ~~Underpass~~ Road)	~~R17-6-405; R17-6-406; R17-6-408; R17-6-409~~ R17-6-402; R17-6-403			Over 14' - 16' = R	
Interstate 10	MP 169.85 Eastbound (Goodyear Road Underpass - Structure 1149)	~~R17-6-405; R17-6-406; R17-6-408; R17-6-409~~ R17-6-402; R17-6-403	~~15' 10"~~ 15' 9"		Over 14' - 16' = R	
Interstate 10	MP 169.85 (Goodyear ~~Underpass~~ Road) to MP 174.63 (Nelson Road)	~~R17-6-405; R17-6-406; R17-6-408; R17-6-409~~ R17-6-402; R17-6-403			~~Over 14' - 16" = R~~ Over 14' - 16' = R	
Interstate 10	MP 174.63 Eastbound (Nelson Road Underpass - Structure 1213)	~~R17-6-405; R17-6-406; R17-6-408; R17-6-409~~ R17-6-402; R17-6-403	15' 11"		~~Over 14' - 16" = R~~ Over 14' - 16' = R	
Interstate 10	MP 174.63 (Nelson Road) to MP 175.81 (Casa Blanca Road TI)	~~R17-6-405; R17-6-406; R17-6-408; R17-6-409~~ R17-6-402; R17-6-403			~~Over 14' - 16" = R~~ Over 14' - 16' = R	
Interstate 10	MP 175.81 Eastbound (Casa Blanca ~~TI~~ Road Underpass - Structure 1214)	~~R17-6-405; R17-6-406; R17-6-408; R17-6-409~~ R17-6-402; R17-6-403	15' 11"		~~Over 14' - 16" = R~~ Over 14' - 16' = R	
Interstate 10	MP 175.81 Westbound (Casa Blanca ~~TI~~ Road Underpass - Structure 1214)	~~R17-6-405; R17-6-406; R17-6-408; R17-6-409~~ R17-6-402; R17-6-403	15' 10"		~~Over 14' - 16" = R~~ Over 14' - 16' = R	
Interstate 10	MP 175.81 (Casa Blanca Road TI) to MP 177.76 (Gas Line Road ~~TI~~)	~~R17-6-405; R17-6-406; R17-6-408; R17-6-409~~ R17-6-402; R17-6-403			~~Over 14' - 16" = R~~ Over 14' - 16' = R	
Interstate 10	MP 177.76 Eastbound (Gas Line Road Underpass - Structure 1215)	~~R17-6-405; R17-6-406; R17-6-408; R17-6-409~~ R17-6-402; R17-6-403	15' 11"		~~Over 14' - 16" = R~~ Over 14' - 16' = R	
Interstate 10	MP 177.76 (Gas Line Road ~~TI~~) to MP 179.39 (Seed Farm Road ~~TI~~)	~~R17-6-405; R17-6-406; R17-6-408; R17-6-409~~ R17-6-402; R17-6-403			~~Over 14' - 16" = R~~ Over 14' - 16' = R	

Route	Restriction Location (MP = Milepost)	Transport Subject to:	Height	Length	Width	Weight (in lbs)
Escort requirements: F = front escort, R = rear escort, F/R = front and rear escort, and LE = law enforcement escort						
Interstate 10	MP 179.39 Westbound (Seed Farm Road Underpass - Structure 1216)	~~R17-6-405; R17-6-406; R17-6-408; R17-6-409~~ R17-6-402; R17-6-403	15’ 10”		~~Over 14’ - 16” = R~~ Over 14’ - 16’ = R	
~~Interstate 10~~	~~MP 179.39 (Seed Farm Road TI) to MP 195.89 (Earley Road)~~	~~R17-6-405; R17-6-406; R17-6-408; R17-6-409~~			~~Over 14’ - 16” = R~~	
Interstate 10	MP 179.39 (Seed Farm Road) to MP 188.20 (Val Vista Road)	R17-6-402; R17-6-403			Over 14’ - 16’ = R	
Interstate 10	MP 188.20 Westbound (Val Vista Underpass - Structure 1152)	R17-6-402; R17-6-403	15’ 9”		Over 14’ - 16’ = R	
Interstate 10	MP 188.20 (Val Vista Road) to MP 190.73 (McCartney Road TI)	R17-6-402; R17-6-403			Over 14’ - 16’ = R	
Interstate 10	MP 190.73 Westbound (McCartney Road Underpass - Structure 1153)	R17-6-402; R17-6-403	15’ 9”		Over 14’ - 16’ = R	
Interstate 10	MP 190.73 (McCartney Road TI) to MP 193.88 (Cottonwood Lane)	R17-6-402; R17-6-403			Over 14’ - 16’ = R	
Interstate 10	MP 193.88 Eastbound (Cottonwood Lane Underpass - Structure 1154)	R17-6-402; R17-6-403	15’ 7”		Over 14’ - 16’ = R	
Interstate 10	MP 193.88 Westbound (Cottonwood Lane Underpass - Structure 1154)	R17-6-402; R17-6-403	15’ 11”		Over 14’ - 16’ = R	
Interstate 10	MP 193.88 (Cottonwood Lane) to MP 194.88 (Junction SR 287 - Florence Blvd)	R17-6-402; R17-6-403			Over 14’ - 16’ = R	
Interstate 10	MP 194.88 Eastbound (Junction SR 287 - Florence Blvd Underpass - Structure 1156)	R17-6-402; R17-6-403	15’ 9”		Over 14’ - 16’ = R	
Interstate 10	MP 194.88 (Junction SR 287 - Florence Blvd) to MP 195.89 (Earley Road)	R17-6-402; R17-6-403			Over 14’ - 16’ = R	
Interstate 10	MP 195.89 (Earley Road Underpass - Structure 1158)	~~R17-6-405; R17-6-406; R17-6-408; R17-6-409~~ R17-6-402; R17-6-403	15’ 11”		~~Over 14’ - 16” = R~~ Over 14’ - 16’ = R	
~~Interstate 10~~	~~MP 195.89 (Earley Road) to MP 203.84 (Toltec Road TI)~~	~~R17-6-405; R17-6-406; R17-6-408; R17-6-409~~			~~Over 14’ - 16” = R~~	
Interstate 10	MP 195.89 (Earley Road) to MP 196.89 (Selma Highway)	R17-6-402; R17-6-403			Over 14’ - 16’ = R	
Interstate 10	MP 196.89 Eastbound (Selma Highway Underpass - Structure 1160)	R17-6-402; R17-6-403	15’ 10”		Over 14’ - 16’ = R	
Interstate 10	MP 196.89 (Selma Highway) to MP 200.12 (Sunland Gin Road TI)	R17-6-402; R17-6-403			Over 14’ - 16’ = R	
Interstate 10	MP 200.12 Eastbound (Sunland Gin Road Underpass - Structure 941)	R17-6-402; R17-6-403	15’ 8”		Over 14’ - 16’ = R	
Interstate 10	MP 200.12 Westbound (Sunland Gin Road Underpass - Structure 941)	R17-6-402; R17-6-403	15’ 10”		Over 14’ - 16’ = R	
Interstate 10	MP 200.12 (Sunland Gin Road TI) to MP 203.84 (Toltec Road TI)	R17-6-402; R17-6-403			Over 14’ - 16’ = R	
Interstate 10	MP 203.84 Westbound (Toltec Road Underpass - Structure 2152)	~~R17-6-405; R17-6-406; R17-6-408; R17-6-409~~ R17-6-402; R17-6-403	~~15’ 11”~~ 15’ 8”		~~Over 14’ - 16” = R~~ Over 14’ - 16’ = R	

Route	Restriction Location (MP = Milepost)	Transport Subject to:	Height	Length	Width	Weight (in lbs)
Escort requirements: F = front escort, R = rear escort, F/R = front and rear escort, and LE = law enforcement escort						
Interstate 10	MP 203.84 (Toltec Road TI) to MP 205.45 (Battaglia ~~Underpass~~ Drive)	~~R17-6-405; R17-6-406; R17-6-408; R17-6-409~~ R17-6-402; R17-6-403			~~Over 14' - 16" = R~~ Over 14' - 16' = R	
Interstate 10	MP 205.45 (Battaglia Drive Underpass - Structure 943)	~~R17-6-405; R17-6-406; R17-6-408; R17-6-409~~ R17-6-402; R17-6-403	15' 9"		Over 14' - 16' = R	
~~Interstate 10~~	~~MP 205.45 (Battaglia Underpass) to MP 208.79 (Sunshine Blvd TI)~~	~~R17-6-405; R17-6-406; R17-6-408; R17-6-409~~			~~Over 14' - 16' = R~~	
Interstate 10	MP 205.45 (Battaglia Drive) to MP 207.17 (Alsdorf Road)	R17-6-402; R17-6-403			Over 14' - 16' = R	
Interstate 10	MP 207.17 Westbound (Alsdorf Road Underpass - Structure 944)	R17-6-402; R17-6-403	15' 8"		Over 14' - 16' = R	
Interstate 10	MP 207.17 (Alsdorf Road) to MP 208.79 (Sunshine Blvd TI)	R17-6-402; R17-6-403			Over 14' - 16' = R	
Interstate 10	MP 208.79 Eastbound (Sunshine Blvd Underpass - Structure 945)	R17-6-402; R17-6-403	15' 8"		Over 14' - 16' = R	
Interstate 10	MP 208.79 Westbound (Sunshine Blvd Underpass - Structure 945)	~~R17-6-405; R17-6-406; R17-6-408; R17-6-409~~ R17-6-402; R17-6-403	15' 11"		Over 14' - 16' = R	
Interstate 10	MP 208.79 (Sunshine Blvd TI) to MP 226.45 (Red Rock Road TI)	~~R17-6-405; R17-6-406; R17-6-408; R17-6-409~~ R17-6-402; R17-6-403			Over 14' - 16' = R	
~~Interstate 10~~	~~MP 226.45 Eastbound (Red Rock Road Underpass - Structure 592)~~	~~R17-6-405; R17-6-406; R17-6-408; R17-6-409~~	~~15' 11"~~		~~Over 14' - 16' = R~~	
Interstate 10	MP 226.45 Westbound (Red Rock Road Underpass - Structure 592)	~~R17-6-405; R17-6-406; R17-6-408; R17-6-409~~ R17-6-402; R17-6-403	~~15' 9"~~ 15' 7"		Over 14' - 16' = R	
Interstate 10	MP 226.45 (Red Rock Road TI) to MP 236.42 (Marana Road TI)	~~R17-6-405; R17-6-406; R17-6-408; R17-6-409~~ R17-6-402; R17-6-403			Over 14' - 16' = R	
Interstate 10	MP 236.42 (Marana Road TI) to MP 270.57 (Kolb Road TI)	~~R17-6-405; R17-6-406; R17-6-408; R17-6-409~~ R17-6-402; R17-6-403; R17-6-404			Over 14' - 16' = R	
~~Interstate 10~~	~~MP 270.57 Eastbound (Kolb Road Underpass - Structure 1823)~~	~~R17-6-405; R17-6-406; R17-6-408; R17-6-409~~	~~15' 11"~~		~~Over 14' - 16' = R~~	
Interstate 10	MP 270.57 (Kolb Road TI) to MP 273.14 (Rita Road TI)	~~R17-6-405; R17-6-406; R17-6-408; R17-6-409~~ R17-6-402; R17-6-403			Over 14' - 16' = R	
Interstate 10	MP 273.14 Eastbound (Rita Road Underpass - Structure 711)	~~R17-6-405; R17-6-406; R17-6-408; R17-6-409~~ R17-6-402; R17-6-403	15' 11"		Over 14' - 16' = R	
Interstate 10	MP 273.14 (Rita Road TI) to MP 275.49 (Houghton Road TI)	~~R17-6-405; R17-6-406; R17-6-408; R17-6-409~~ R17-6-402; R17-6-403			Over 14' - 16' = R	
Interstate 10	MP 275.49 Westbound (Houghton Road Underpass - Structure 713)	~~R17-6-405; R17-6-406; R17-6-408; R17-6-409~~ R17-6-402; R17-6-403	~~15' 10"~~ 15' 11"		Over 14' - 16' = R	
Interstate 10	MP 275.49 (Houghton Road TI) to MP 279.37 (Vail/Wentworth TI)	~~R17-6-405; R17-6-406; R17-6-408; R17-6-409~~ R17-6-402; R17-6-403			Over 14' - 16' = R	
Interstate 10	MP 279.37 Eastbound (Vail/Wentworth Underpass - Structure 744)	~~R17-6-405; R17-6-406; R17-6-408; R17-6-409~~ R17-6-402; R17-6-403	15' 11"		Over 14' - 16' = R	
~~Interstate 10~~	~~MP 279.37 Westbound (Vail/Wentworth Underpass - Structure 745)~~	~~R17-6-405; R17-6-406; R17-6-408; R17-6-409~~	~~15' 10"~~		~~Over 14' - 16' = R~~	

Route	Restriction Location (MP = Milepost)	Transport Subject to:	Height	Length	Width	Weight (in lbs)
Escort requirements: F = front escort, R = rear escort, F/R = front and rear escort, and LE = law enforcement escort						
~~Interstate 10~~	~~MP 279.37 (Vail/Wentworth TI) to MP 339.46 (Airport Road)~~	~~R17-6-405; R17-6-406; R17-6-408; R17-6-409~~			~~Over 14' - 16' = R~~	
Interstate 10	MP 279.37 (Vail/Wentworth TI) to MP 297.17 (Mescal Road TI)	R17-6-402; R17-6-403			Over 14' - 16' = R	
Interstate 10	MP 297.17 Westbound (Mescal Road Underpass - Structure 517)	R17-6-402; R17-6-403	15' 11"		Over 14' - 16' = R	
Interstate 10	MP 297.17 (Mescal Road TI) to MP 339.46 (Airport Road)	R17-6-402; R17-6-403			Over 14' - 16' = R	
Interstate 10	MP 339.46 Eastbound (Airport Road Underpass - Structure 1114)	~~R17-6-405; R17-6-406; R17-6-408; R17-6-409~~ R17-6-402; R17-6-403	15' 8"		Over 14' - 16' = R	
Interstate 10	MP 339.46 (Airport Road) to MP 378.93 (Junction SB 10, West of San Simon ~~TI~~)	~~R17-6-405; R17-6-406; R17-6-408; R17-6-409~~ R17-6-402; R17-6-403			Over 14' - 16' = R	
Interstate 10	MP 378.93 Eastbound (SB 10 Underpass, West of San Simon ~~Underpass~~ - Structure 1164)	~~R17-6-405; R17-6-406; R17-6-408; R17-6-409~~ R17-6-402; R17-6-403	15' 10"		Over 14' - 16' = R	
Interstate 10	MP 378.93 Westbound (SB 10 Underpass, West of San Simon ~~Underpass~~ - Structure 1164)	~~R17-6-405; R17-6-406; R17-6-408; R17-6-409~~ R17-6-402; R17-6-403	15' 11"		Over 14' - 16' = R	
Interstate 10	MP 378.93 (Junction SB 10, West of San Simon ~~TI~~) to MP 382.35 (Junction SB 10, East of San Simon ~~TI~~)	~~R17-6-405; R17-6-406; R17-6-408; R17-6-409~~ R17-6-402; R17-6-403			Over 14' - 16' = R	
Interstate 10	MP 382.35 Eastbound (SB 10 Underpass, East of San Simon ~~Underpass~~ - Structure 1169)	~~R17-6-405; R17-6-406; R17-6-408; R17-6-409~~ R17-6-402; R17-6-403	~~15' 10"~~ 15' 9"		Over 14' - 16' = R	
Interstate 10	MP 382.35 (Junction SB 10, East of San Simon ~~TI~~) to MP 391.23 (New Mexico State Line)	~~R17-6-405; R17-6-406; R17-6-408; R17-6-409~~ R17-6-402; R17-6-403			Over 14' - 16' = R	
Interstate 10 (Frontage Road)	MP 258.64 (Congress Street TI) to MP 259.34 (22nd Street TI)	R17-6-402; R17-6-403; R17-6-404	*14' 6"		Over 14' - 16' = R	*Light rail - low electric cables.
Interstate 15	MP 0.00 (Nevada State Line) to MP 15.38 (Virgin River Bridge # 5)	~~R17-6-405; R17-6-406; R17-6-408; R17-6-409~~ R17-6-402; R17-6-403		Over 100' ~~unarticulated~~ non-articulated = F/R + 2 LE	Over 14' - 16' = F/R + 2 LE	

Route	Restriction Location (MP = Milepost)	Transport Subject to:	Height	Length	Width	Weight (in lbs)
Escort requirements: F = front escort, R = rear escort, F/R = front and rear escort, and LE = law enforcement escort						
Interstate 15	MP 15.38 Northbound (Virgin River Bridge #5 - Structure 1617)	~~R17-6-405; R17-6-406; R17-6-408; R17-6-409~~ R17-6-402; R17-6-403		Over 100' ~~unarticulated~~ non-articulated = F/R + 2 LE	Over 14' - 16' = F/R + 2 LE	Class A permitted vehicles with a gross weight of: 150,000 or less - no additional restrictions; 150,001 through 250,000 - drivers shall: Coordinate road closures by or under the direction of 2 law enforcement escorts; and Cross on center of bridge at a constant speed of no more than 10 mph while on bridge. ~~Class C permitted vehicles with a gross weight of over 250,000 require special analysis and approval from the ADOT Bridge Group.~~ Class C permitted vehicles with a gross weight of: 250,001 or more require special analysis and approval from the ADOT Bridge Group.
Interstate 15	MP ~~15.38~~ 15.50 Southbound (Virgin River Bridge #5 - Structure 1618)	~~R17-6-405; R17-6-406; R17-6-408; R17-6-409~~ R17-6-402; R17-6-403		Over 100' ~~unarticulated~~ non-articulated = F/R + 2 LE	Over 14' - 16' = F/R + 2 LE	Class A permitted vehicles with a gross weight of: 150,000 or less - no additional restrictions; 150,001 through 250,000 - drivers shall: Coordinate road closures by or under the direction of 2 law enforcement escorts; and Cross on center of bridge at a constant speed of no more than 10 mph while on bridge. ~~Class C permitted vehicles with a gross weight of over 250,000 require special analysis and approval from the ADOT Bridge Group.~~ Class C permitted vehicles with a gross weight of: 250,001 or more require special analysis and approval from the ADOT Bridge Group.
Interstate 15	MP 15.38 (Virgin River Bridge #5) to MP 29.40 (Utah State Line)	~~R17-6-405; R17-6-406; R17-6-408; R17-6-409~~ R17-6-402; R17-6-403		Over 100' ~~unarticulated~~ non-articulated = F/R + 2 LE	Over 14' - 16' = F/R + 2 LE	
Interstate 17	MP 193.94 (Beginning of route at Junction I-10) to MP 198.84 (Buckeye Road TI)	~~R17-6-404; R17-6-405; R17-6-406; R17-6-408; R17-6-409~~ R17-6-402; R17-6-403; R17-6-404			Over 14' - 16' = R	
Interstate 17	MP 198.84 (Buckeye Road Underpass - Structure 607)	~~R17-6-404; R17-6-405; R17-6-406; R17-6-408; R17-6-409~~ R17-6-402; R17-6-403; R17-6-404	~~15' 5"~~ 15' 8"		Over 14' - 16' = R	
Interstate 17	MP 198.84 (Buckeye Road TI) to MP 199.15 (Grant Street TI)	~~R17-6-404; R17-6-405; R17-6-406; R17-6-408; R17-6-409~~ R17-6-402; R17-6-403; R17-6-404			Over 14' - 16' = R	

Route	Restriction Location (MP = Milepost)	Transport Subject to:	Height	Length	Width	Weight (in lbs)
Escort requirements: F = front escort, R = rear escort, F/R = front and rear escort, and LE = law enforcement escort						
Interstate 17	MP 199.15 (Grant Street Underpass - Structure 555)	~~R17-6-404; R17-6-405; R17-6-406; R17-6-408; R17-6-409~~ R17-6-402; R17-6-403; R17-6-404	~~15’ 6”~~ 15’ 5”		Over 14’ - 16’ = R	
Interstate 17	MP 199.15 (Grant Street TI) to MP 199.35 (Railroad Underpass)	~~R17-6-404; R17-6-405; R17-6-406; R17-6-408; R17-6-409~~ R17-6-402; R17-6-403; R17-6-404			Over 14’ - 16’ = R	
Interstate 17	MP 199.35 ~~Northbound~~ (Railroad Underpass - Structure 600)	~~R17-6-404; R17-6-405; R17-6-406; R17-6-408; R17-6-409~~ R17-6-402; R17-6-403; R17-6-404	15’ 8”		Over 14’ - 16’ = R	
~~Interstate 17~~	~~MP 199.35 Southbound (Railroad Underpass - Structure 600)~~	~~R17-6-404; R17-6-405; R17-6-406; R17-6-408; R17-6-409~~	~~15’ 7”~~		~~Over 14’ - 16’ = R~~	
Interstate 17	MP 199.35 (Railroad Underpass) to MP 199.56 (Jefferson Street TI)	~~R17-6-404; R17-6-405; R17-6-406; R17-6-408; R17-6-409~~ R17-6-402; R17-6-403; R17-6-404			Over 14’ - 16’ = R	
Interstate 17	MP 199.56 Northbound (Jefferson Street Underpass - Structure 554)	~~R17-6-404; R17-6-405; R17-6-406; R17-6-408; R17-6-409~~ R17-6-402; R17-6-403; R17-6-404	15’ 8”		Over 14’ - 16’ = R	
Interstate 17	MP 199.56 Southbound (Jefferson Street Underpass - Structure 554)	~~R17-6-404; R17-6-405; R17-6-406; R17-6-408; R17-6-409~~ R17-6-402; R17-6-403; R17-6-404	15’ 7”		Over 14’ - 16’ = R	
~~Interstate 17~~	~~MP 199.56 (Jefferson Street) to MP 214.74 (Utopia Road Ramp C)~~	~~R17-6-404; R17-6-405; R17-6-406; R17-6-408; R17-6-409~~			~~Over 14’ - 16’ = R~~	
~~Interstate 17~~	~~MP 214.74 Northbound (Utopia Road Ramp C - Structure 2138)~~	~~R17-6-404; R17-6-405; R17-6-406; R17-6-408; R17-6-409~~	~~15’ 11”~~		~~Over 14’ - 16’ = R~~	
~~Interstate 17~~	~~MP 214.74 (Utopia Road Ramp C) to MP 214.96 (Junction SR 101)~~	~~R17-6-404; R17-6-405; R17-6-406; R17-6-408; R17-6-409~~			~~Over 14’ - 16’ = R~~	
~~Interstate 17~~	~~MP 214.96 (Junction SR 101) to MP 223.99 (Junction SR 74)~~	~~R17-6-405; R17-6-406; R17-6-408; R17-6-409~~			~~Over 14’ - 16’ = R~~	
Interstate 17	MP 199.56 (Jefferson Street TI) to MP 214.96 (Junction SR 101 Loop)	R17-6-402; R17-6-403; R17-6-404			Over 14’ - 16’ = R	
Interstate 17	MP 214.96 (Junction SR 101 Loop) to MP 221.94 (Junction SR 303 Loop - Sonoran Desert Drive TI)	R17-6-402; R17-6-403; R17-6-407			Over 14’ - 16’ = R	
Interstate 17	MP 221.94 (Junction SR 303 Loop - Sonoran Desert Drive TI) to MP 223.99 (Junction SR 74)	R17-6-402; R17-6-403; R17-6-407			Over 14’ - 16’ = R	
Interstate 17	MP 224.00 Southbound (Carefree Highway Underpass - Structure 2845)	~~R17-6-405; R17-6-406; R17-6-407; R17-6-408; R17-6-409~~ R17-6-402; R17-6-403; R17-6-407			Over 14’ - 16’ = R	
Interstate 17	MP 224.00 (Carefree Highway TI) to MP 229.07 (Anthem Road)	~~R17-6-405; R17-6-406; R17-6-407; R17-6-408; R17-6-409~~ R17-6-402; R17-6-403; R17-6-407			Over 14’ - 16’ = R	
Interstate 17	MP 229.07 (Anthem Road) to MP 235.94 (Table Mesa Road TI)	~~R17-6-405; R17-6-406; R17-6-407; R17-6-408; R17-6-409~~ R17-6-402; R17-6-403; R17-6-407			Over 14’ - 16’ = F/R	

Route	Restriction Location (MP = Milepost)	Transport Subject to:	Height	Length	Width	Weight (in lbs)
Escort requirements: F = front escort, R = rear escort, F/R = front and rear escort, and LE = law enforcement escort						
Interstate 17	MP 235.94 Southbound (Table Mesa Road Underpass - Structure 1294)	~~R17-6-405; R17-6-406; R17-6-407; R17-6-408; R17-6-409~~ R17-6-402; R17-6-403; R17-6-407	15’ 10”		Over 14’ - 16’ = F/R	
Interstate 17	MP 235.94 (Table Mesa Road TI) to MP 242.15 (Rock ~~Spring~~ Springs Road TI)	~~R17-6-405; R17-6-406; R17-6-407; R17-6-408; R17-6-409~~ R17-6-402; R17-6-403; R17-6-407			Over 14’ - 16’ = F/R	
Interstate 17	MP 242.15 (Rock ~~Spring~~ Springs Road Underpass - Structures 969 & 970)	~~R17-6-405; R17-6-406; R17-6-407; R17-6-408; R17-6-409~~ R17-6-402; R17-6-403; R17-6-407	15’ 9”		Over 14’ - 16’ = R	
Interstate 17	MP 242.15 (Rock ~~Spring~~ Springs Road TI) to MP 289.97 (Middle Verde Road TI)	~~R17-6-405; R17-6-406; R17-6-407; R17-6-408; R17-6-409~~ R17-6-402; R17-6-403; R17-6-407			Over 14’ - 16’ = R	
Interstate 17	MP 289.97 ~~Southbound~~ Northbound (Middle Verde Road Underpass - Structure 1733)	~~R17-6-405; R17-6-406; R17-6-407; R17-6-408; R17-6-409~~ R17-6-402; R17-6-403; R17-6-407	15’ 11”		Over 14’ - 16’ = R	
Interstate 17	MP 289.97 (Middle Verde Road TI) to MP 293.26 (~~Cornville/McGuireville TI~~ Cornville Road TI)	~~R17-6-405; R17-6-406; R17-6-407; R17-6-408; R17-6-409~~ R17-6-402; R17-6-403; R17-6-407			Over 14’ - 16’ = R	
Interstate 17	MP 293.26 Southbound (~~Cornville/McGuireville~~ Cornville Road Underpass - Structure 652)	~~R17-6-405; R17-6-406; R17-6-407; R17-6-408; R17-6-409~~ R17-6-402; R17-6-403; R17-6-407	~~14’ 8”~~ 14’ 9”		Over 14’ - 16’ = R	
Interstate 17	MP 293.26 (~~Cornville/McGuireville~~ Cornville Road TI) to MP 340.05 (End of route at Junction I-40)	~~R17-6-405; R17-6-406; R17-6-407; R17-6-408; R17-6-409~~ R17-6-402; R17-6-403; R17-6-407			Over 14’ - 16’ = R	
Interstate 19	MP 0.00 / KP 0.00 (US/Mexico Border) to ~~MP 13.96~~ MP 13.93 / KP 22.42 (Peck Canyon Road TI)	~~R17-6-405; R17-6-406; R17-6-408; R17-6-409~~ R17-6-402; R17-6-403			Over 14’ - 16’ = R	
Interstate 19	~~MP 13.96~~ MP 13.93 / KP 22.42 Northbound (Peck Canyon Road Underpass - Structure 935)	~~R17-6-405; R17-6-406; R17-6-408; R17-6-409~~ R17-6-402; R17-6-403	15’ 10”		Over 14’ - 16’ = R	
Interstate 19	~~MP 13.96~~ MP 13.93 / KP 22.42 (Peck Canyon Road TI) to ~~MP 26.54~~ MP 26.53 / KP 42.69 (Agua Linda Road TI)	~~R17-6-405; R17-6-406; R17-6-408; R17-6-409~~ R17-6-402; R17-6-403			Over 14’ - 16’ = R	
Interstate 19	~~MP 26.54~~ MP 26.53 / KP 42.69 Northbound (Agua Linda Road Underpass - Structure 1739)	~~R17-6-405; R17-6-406; R17-6-408; R17-6-409~~ R17-6-402; R17-6-403	~~15’ 10”~~ 15’ 11”		Over 14’ - 16’ = R	
Interstate 19	~~MP 26.54~~ MP 26.53 / KP 42.69 (Agua Linda Road TI) to ~~MP 59.09~~ MP 58.80 / KP 94.62 (Valencia Road TI~~, Kilometer Post 95.00~~)	~~R17-6-405; R17-6-406; R17-6-408; R17-6-409~~ R17-6-402; R17-6-403			Over 14’ - 16’ = R	
Interstate 19	~~MP 59.09~~ MP 58.80 / KP 94.62 (Valencia Road TI~~, Kilometer Post 95.00~~) to ~~MP 60.95~~ MP 60.85 / KP 97.92 (Irvington Road TI)	~~R17-6-404; R17-6-405; R17-6-406; R17-6-408; R17-6-409~~ R17-6-402; R17-6-403; R17-6-404			Over 14’ - 16’ = R	
Interstate 19	~~MP 60.95~~ MP 60.85 / KP 97.92 Southbound (Irvington Road Underpass - Structure 1123)	~~R17-6-404; R17-6-405; R17-6-406; R17-6-408; R17-6-409~~ R17-6-402; R17-6-403; R17-6-404	15’ 11”		Over 14’ - 16’ = R	

Route	Restriction Location (MP = Milepost)	Transport Subject to:	Height	Length	Width	Weight (in lbs)
Escort requirements: F = front escort, R = rear escort, F/R = front and rear escort, and LE = law enforcement escort						
Interstate 19	~~MP 60.95~~ MP 60.85 / KP 97.92 (Irvington Road TI) to ~~MP 61.90~~ MP 61.85 / KP 99.53 (Junction SR 86 - Ajo Way TI)	~~R17-6-404; R17-6-405; R17-6-406; R17-6-408; R17-6-409~~ R17-6-402; R17-6-403; R17-6-404			Over 14’ - 16’ = R	
Interstate 19	~~MP 61.90~~ MP 61.85 / KP 99.53 Southbound (Junction SR 86 - Ajo Way Underpass - Structure 1125)	~~R17-6-404; R17-6-405; R17-6-406; R17-6-408; R17-6-409~~ R17-6-402; R17-6-403; R17-6-404	~~15’ 9”~~ 15’ 10”		Over 14’ - 16’ = R	
Interstate 19	~~MP 61.90~~ MP 61.85 / KP 99.53 (Junction SR 86 - Ajo Way TI) to ~~MP 63.09~~ MP 63.43 / KP 102.08 (Junction I-10)	~~R17-6-404; R17-6-405; R17-6-406; R17-6-408; R17-6-409~~ R17-6-402; R17-6-403; R17-6-404			Over 14’ - 16’ = R	
Interstate 40	MP 0.00 (California State Line) to MP 3.01 Westbound (Needle Mountain Road TI)	~~R17-6-405; R17-6-406; R17-6-408; R17-6-409~~ R17-6-402; R17-6-403			Over 14’ - 16’ = R	
Interstate 40	MP 3.01 Westbound (Needle Mountain Road Underpass - Structure 1756)	~~R17-6-405; R17-6-406; R17-6-408; R17-6-409~~ R17-6-402; R17-6-403	15’ 11”		Over 14’ - 16’ = R	
Interstate 40	MP 3.01 Westbound (Needle Mountain Road TI) to MP 26.17 (~~East Yucca~~ Proving Ground Road TI)	~~R17-6-405; R17-6-406; R17-6-408; R17-6-409~~ R17-6-402; R17-6-403			Over 14’ - 16’ = R	
Interstate 40	MP 26.17 Eastbound (~~East Yucca~~ Proving Ground Road Underpass - Structure 923)	~~R17-6-405; R17-6-406; R17-6-408; R17-6-409~~ R17-6-402; R17-6-403	15’ 10”		Over 14’ - 16’ = R	
Interstate 40	MP 26.17 (~~East Yucca~~ Proving Ground Road TI) to MP 37.03 (Griffith Road TI)	~~R17-6-405; R17-6-406; R17-6-408; R17-6-409~~ R17-6-402; R17-6-403			Over 14’ - 16’ = R	
Interstate 40	MP 37.03 Eastbound (Griffith Road Underpass - Structure 928)	~~R17-6-405; R17-6-406; R17-6-408; R17-6-409~~ R17-6-402; R17-6-403	15’ 10”		Over 14’ - 16’ = R	
Interstate 40	MP 37.03 (Griffith Road TI) to MP 87.57 (Willow Ranch Road TI)	~~R17-6-405; R17-6-406; R17-6-408; R17-6-409~~ R17-6-402; R17-6-403			Over 14’ - 16’ = R	
Interstate 40	MP 87.57 Westbound (Willow Ranch Road Underpass - Structure 1770)	~~R17-6-405; R17-6-406; R17-6-408; R17-6-409~~ R17-6-402; R17-6-403	~~15’ 7”~~ 15’ 9”		Over 14’ - 16’ = R	
Interstate 40	MP 87.57 (Willow Ranch Road TI) to MP 117.87 (Canyon Mouth Dam Road)	~~R17-6-405; R17-6-406; R17-6-408; R17-6-409~~ R17-6-402; R17-6-403			Over 14’ - 16’ = R	
Interstate 40	MP 117.87 Eastbound (Canyon Mouth Dam Road Underpass - Structure 1256)	~~R17-6-405; R17-6-406; R17-6-408; R17-6-409~~ R17-6-402; R17-6-403	15’ 11”		Over 14’ - 16’ = R	
Interstate 40	MP 117.87 (Canyon Mouth Dam Road) to MP 121.07 (Junction SB 40, West of Seligman ~~TI~~)	~~R17-6-405; R17-6-406; R17-6-408; R17-6-409~~ R17-6-402; R17-6-403			Over 14’ - 16’ = R	
Interstate 40	MP 121.07 Eastbound (~~West Seligman~~ Junction SB 40 Underpass - Structure 1258)	~~R17-6-405; R17-6-406; R17-6-408; R17-6-409~~ R17-6-402; R17-6-403	15’ 10”		Over 14’ - 16’ = R	
Interstate 40	MP 121.07 (Junction SB 40, West of Seligman ~~TI~~) to MP 139.88 (Crookton Road TI)	~~R17-6-405; R17-6-406; R17-6-408; R17-6-409~~ R17-6-402; R17-6-403			Over 14’ - 16’ = R	
Interstate 40	MP 139.88 Westbound (Crookton Road Underpass - Structure 1177)	~~R17-6-405; R17-6-406; R17-6-408; R17-6-409~~ R17-6-402; R17-6-403	15’ 9”		Over 14’ - 16’ = R	
~~Interstate 40~~	~~MP 139.88 (Crookton Road TI) to MP 167.52 (Garland Prairie TI)~~	~~R17-6-405; R17-6-406; R17-6-408; R17-6-409~~			~~Over 14’ - 16’ = R~~	
~~Interstate 40~~	~~MP 167.52 (Garland Prairie Underpass - Structure 739)~~	~~R17-6-405; R17-6-406; R17-6-408; R17-6-409~~	~~15’ 11”~~		~~Over 14’ - 16’ = R~~	

Route	Restriction Location (MP = Milepost)	Transport Subject to:	Height	Length	Width	Weight (in lbs)
Escort requirements: F = front escort, R = rear escort, F/R = front and rear escort, and LE = law enforcement escort						
~~Interstate 40~~	~~MP 167.52 (Garland Prairie TI) to MP 178.24 (Parks Road TI)~~	~~R17-6-405; R17-6-406; R17-6-408; R17-6-409~~			~~Over 14' - 16' = R~~	
Interstate 40	MP 139.88 (Crookton Road TI) to MP 178.24 (Parks Road TI)	R17-6-402; R17-6-403			Over 14' - 16' = R	
Interstate 40	MP 178.24 Eastbound (Parks Road Underpass - Structure 743)	~~R17-6-405; R17-6-406; R17-6-408; R17-6-409~~ R17-6-402; R17-6-403	15' 10"		Over 14' - 16' = R	
~~Interstate 40~~	~~MP 178.24 (Parks Road TI) to MP 201.10 (Country Club Road TI)~~	~~R17-6-405; R17-6-406; R17-6-408; R17-6-409~~			~~Over 14' - 16' = R~~	
~~Interstate 40~~	~~MP 201.10 Westbound (Country Club Road Underpass - Structure 1926)~~	~~R17-6-405; R17-6-406; R17-6-408; R17-6-409~~	~~15' 11"~~		~~Over 14' - 16' = R~~	
~~Interstate 40~~	~~MP 201.10 (Country Club Road TI) to MP 204.87 (Walnut Canyon TI)~~	~~R17-6-405; R17-6-406; R17-6-408; R17-6-409~~			~~Over 14' - 16' = R~~	
Interstate 40	MP 178.24 (Parks Road TI) to MP 204.87 (Walnut Canyon Road TI)	R17-6-402; R17-6-403			Over 14' - 16' = R	
Interstate 40	MP 204.87 Eastbound (Walnut Canyon Road Underpass - Structure 1270)	~~R17-6-405; R17-6-406; R17-6-408; R17-6-409~~ R17-6-402; R17-6-403	15' 9"		Over 14' - 16' = R	
Interstate 40	MP 204.87 Westbound (Walnut Canyon Road Underpass - Structure 1271)	~~R17-6-405; R17-6-406; R17-6-408; R17-6-409~~ R17-6-402; R17-6-403	15' 11"		Over 14' - 16' = R	
~~Interstate 40~~	~~MP 204.87 (Walnut Canyon TI) to MP 207.24 (Cosnino Road)~~	~~R17-6-405; R17-6-406; R17-6-408; R17-6-409~~			~~Over 14' - 16' = R~~	
~~Interstate 40~~	~~MP 207.24 Westbound (Cosnino Road Underpass - Structure 1361)~~	~~R17-6-405; R17-6-406; R17-6-408; R17-6-409~~	~~15' 6"~~		~~Over 14' - 16' = R~~	
~~Interstate 40~~	~~MP 207.24 (Cosnino Road) to MP 211.16 (Winona TI)~~	~~R17-6-405; R17-6-406; R17-6-408; R17-6-409~~			~~Over 14' - 16' = R~~	
Interstate 40	MP 204.87 (Walnut Canyon Road TI) to MP 211.16 (Winona Road TI)	R17-6-402; R17-6-403			Over 14' - 16' = R	
Interstate 40	MP 211.16 Westbound (Winona Road Underpass - Structure 1084)	~~R17-6-405; R17-6-406; R17-6-408; R17-6-409~~ R17-6-402; R17-6-403	15' 9"		Over 14' - 16' = R	
Interstate 40	MP 211.16 (Winona Road TI) to MP 280.64 (Hunt Road TI)	~~R17-6-405; R17-6-406; R17-6-408; R17-6-409~~ R17-6-402; R17-6-403			Over 14' - 16' = R	
Interstate 40	MP 280.64 Westbound (Hunt Road Underpass - Structure 930)	~~R17-6-405; R17-6-406; R17-6-408; R17-6-409~~ R17-6-402; R17-6-403	~~15' 9"~~ 15' 10"		Over 14' - 16' = R	
Interstate 40	MP 280.64 (Hunt Road TI) to MP 294.55 Eastbound (Sun Valley Road TI)	~~R17-6-405; R17-6-406; R17-6-408; R17-6-409~~ R17-6-402; R17-6-403			Over 14' - 16' = R	
Interstate 40	294.55 Eastbound (Sun Valley Road Underpass - Structure 931)	~~R17-6-405; R17-6-406; R17-6-408; R17-6-409~~ R17-6-402; R17-6-403	~~15' 10"~~ 15' 11"		Over 14' - 16' = R	
Interstate 40	MP 294.55 Eastbound (Sun Valley Road TI) to MP 320.00 (Pinta Road TI)	~~R17-6-405; R17-6-406; R17-6-408; R17-6-409~~ R17-6-402; R17-6-403			Over 14' - 16' = R	
Interstate 40	MP 320.00 Westbound (Pinta Road Underpass - Structure 708)	~~R17-6-405; R17-6-406; R17-6-408; R17-6-409~~ R17-6-402; R17-6-403	15' 9"		Over 14' - 16' = R	
Interstate 40	MP 320.00 (Pinta Road TI) to MP 325.92 (Navajo Road TI)	~~R17-6-405; R17-6-406; R17-6-408; R17-6-409~~ R17-6-402; R17-6-403			Over 14' - 16' = R	

Route	Restriction Location (MP = Milepost)	Transport Subject to:	Height	Length	Width	Weight (in lbs)
Escort requirements: F = front escort, R = rear escort, F/R = front and rear escort, and LE = law enforcement escort						
Interstate 40	MP 325.92 Eastbound (Navajo Road Underpass - Structure 709)	~~R17-6-405; R17-6-406; R17-6-408; R17-6-409~~ R17-6-402; R17-6-403	~~15' 11"~~ 15' 10"		Over 14' - 16' = R	
Interstate 40	MP 325.92 Westbound (Navajo Road Underpass - Structure 709)	~~R17-6-405; R17-6-406; R17-6-408; R17-6-409~~ R17-6-402; R17-6-403	15' 9"		Over 14' - 16' = R	
Interstate 40	MP 325.92 (Navajo Road TI) to MP 330.00 (Mc ~~Carroll~~ Carrell Road TI)	~~R17-6-405; R17-6-406; R17-6-408; R17-6-409~~ R17-6-402; R17-6-403			Over 14' - 16' = R	
Interstate 40	MP 330.00 (Mc ~~Carroll~~ Carrell Road Underpass - Structure 710)	~~R17-6-405; R17-6-406; R17-6-408; R17-6-409~~ R17-6-402; R17-6-403	15' 10"		Over 14' - 16' = R	
~~Interstate 40~~	~~MP 330.00 (Mc Carroll Road TI) to MP 333.41 (Chambers TI)~~	~~R17-6-405; R17-6-406; R17-6-408; R17-6-409~~			~~Over 14' - 16' = R~~	
~~Interstate 40~~	~~MP 333.41 Westbound (Chambers Underpass - Structure 814)~~	~~R17-6-405; R17-6-406; R17-6-408; R17-6-409~~	~~15' 9"~~		~~Over 14' - 16' = R~~	
~~Interstate 40~~	~~MP 333.41 (Chambers TI) to MP 339.46 (Sanders TI)~~	~~R17-6-405; R17-6-406; R17-6-408; R17-6-409~~			~~Over 14' - 16' = R~~	
~~Interstate 40~~	~~MP 339.46 Westbound (Sanders Underpass - Structure 815)~~	~~R17-6-405; R17-6-406; R17-6-408; R17-6-409~~	~~15' 10"~~		~~Over 14' - 16' = R~~	
~~Interstate 40~~	~~MP 339.46 (Sanders TI) to MP 341.81 (Ortega Road TI)~~	~~R17-6-405; R17-6-406; R17-6-408; R17-6-409~~			~~Over 14' - 16' = R~~	
Interstate 40	MP 330.00 (Mc Carrell Road TI) to MP 341.81 (Ortega Road TI)	R17-6-402; R17-6-403			Over 14' - 16' = R	
Interstate 40	MP 341.81 Westbound (Ortega Road Underpass - Structure 816)	~~R17-6-405; R17-6-406; R17-6-408; R17-6-409~~ R17-6-402; R17-6-403	15' 10"		Over 14' - 16' = R	
Interstate 40	MP 341.81 (Ortega Road TI) to MP 343.83 (Querino Road TI)	~~R17-6-405; R17-6-406; R17-6-408; R17-6-409~~ R17-6-402; R17-6-403			Over 14' - 16' = R	
Interstate 40	MP 343.83 Eastbound (Querino Road Underpass - Structure 951)	~~R17-6-405; R17-6-406; R17-6-408; R17-6-409~~ R17-6-402; R17-6-403	15' 10"		Over 14' - 16' = R	
Interstate 40	MP 343.83 (Querino Road TI) to MP 348.16 (St. Anselm Road TI - Houck ~~TI~~)	~~R17-6-405; R17-6-406; R17-6-408; R17-6-409~~ R17-6-402; R17-6-403			Over 14' - 16' = R	
Interstate 40	MP 348.16 Eastbound (~~Houck~~ St. Anselm Road Underpass - Structure 955)	~~R17-6-405; R17-6-406; R17-6-408; R17-6-409~~ R17-6-402; R17-6-403	15' 11"		Over 14' - 16' = R	
Interstate 40	MP 348.16 (St. Anselm Road TI - Houck ~~TI~~) to MP 359.63 (New Mexico State Line)	~~R17-6-405; R17-6-406; R17-6-408; R17-6-409~~ R17-6-402; R17-6-403			Over 14' - 16' = R	
Interstate 40 (Frontage Road)	MP 300.75 - (Little Lithodendron Bridge - South Frontage Road - Structure 2057)	~~R17-6-406; R17-6-408~~ R17-6-402			Over 14' - 16' = R	20,000
~~State Business 8~~	~~MP 0.00 (California State Line) to MP 11.50 (End of route, near I-8 east of Yuma)~~	~~R17-6-404; R17-6-405; R17-6-406; R17-6-408; R17-6-409~~			~~Over 14' - 16' = F/R~~	
State Business 8	MP 0.00 (California State Line) to MP 0.27 (End of route, near 1st Street)	R17-6-402; R17-6-403			Over 14' - 16' = F/R	
State Business 8	MP 117.32 (Gila Bend) to MP 122.98 (Junction I-8)	~~R17-6-406; R17-6-408~~ R17-6-402; R17-6-403			Over 14' - 16' = F/R	
State Business 10	MP 17.45 (Junction I-10 - West Main Street) to MP 19.55 (Riggles Road - Junction I-10)	R17-6-402			Over 14' - 16' = F/R	

Route	Restriction Location (MP = Milepost)	Transport Subject to:	Height	Length	Width	Weight (in lbs)
Escort requirements: F = front escort, R = rear escort, F/R = front and rear escort, and LE = law enforcement escort						
~~State Business 10~~	~~MP 303.47 (West Benson) to MP 303.86 (I-10 West Benson TI)~~	~~R17-6-406; R17-6-408~~			~~Over 14' - 16' = F/R~~	
State Business 10	MP 303.37 (I-10 - 4th Street TI, West of Benson) to MP 303.37 (4th Street - Junction I-10, West of Benson)	R17-6-402			Over 14' - 16' = F/R	
State Business 10	~~MP 303.86~~ MP 303.37 Westbound (I-10 Underpass - Structures 1346 & 1347)	~~R17-6-406; R17-6-408~~ R17-6-402	~~15' 1'~~ 15' 0"		Over 14' - 16' = F/R	
State Business 10	~~MP 303.86~~ MP 303.37 (I-10 - 4th Street TI, West of Benson ~~TI~~) to MP 305.79 (Junction SR 80 ~~Underpass~~)	~~R17-6-406; R17-6-408~~ R17-6-402			Over 14' - 16' = F/R	
State Business 10	MP 305.79 Eastbound (SR 80 Underpass - Structure 262)	~~R17-6-406; R17-6-408~~ R17-6-402	14'		Over 14' - 16' = F/R	
State Business 10	MP 305.79 Westbound (SR 80 Underpass - Structure 262)	~~R17-6-406; R17-6-408~~ R17-6-402	14' 2"		Over 14' - 16' = F/R	
State Business 10	MP 305.79 (Junction SR 80 ~~Underpass~~) to ~~MP 305.85~~ MP 305.80 (Railroad Underpass)	~~R17-6-406; R17-6-408~~ R17-6-402			Over 14' - 16' = F/R	
State Business 10	~~MP 305.85~~ MP 305.80 Eastbound (Railroad Underpass - Structure 264)	~~R17-6-406; R17-6-408~~ R17-6-402	14'		Over 14' - 16' = F/R	
State Business 10	MP 305.85 Westbound (Railroad Underpass - Structure 264)	~~R17-6-406; R17-6-408~~ R17-6-402	14' 2"		Over 14' - 16' = F/R	
State Business 10	MP 305.85 (Railroad Underpass) to MP 306.45 (San Pedro River Bridge)	~~R17-6-406; R17-6-408~~ R17-6-402			Over 14' - 16' = F/R	
State Business 10	MP 306.45 (San Pedro River Bridge - Structure 350)	~~R17-6-406; R17-6-408~~ R17-6-402			Over 14' - 16' = F/R ~~+ 2 LE~~	Class A permitted vehicles with a gross weight of: 100,000 or less - no additional restrictions; 100,001 through 150,000 - drivers shall: Coordinate road closures by or under the direction of 2 law enforcement escorts; and Cross on center of bridge at a constant speed of no more than 10 mph while on bridge. ~~Class C permits and special analysis and approval from the ADOT Bridge Group are required for vehicles with a gross weight of 150,001 or more.~~ Class C permitted vehicles with a gross weight of: 250,001 or more require special analysis and approval from the ADOT Bridge Group.
State Business 10	MP 306.45 (San Pedro River Bridge) to MP 306.98 (End SB 10 at Junction I-10, ~~Exit #306~~ East of Benson)	~~R17-6-406; R17-6-408~~ R17-6-402			Over 14' - 16' = F/R	
State Business 10	MP 336.39 (~~Begin SB 10 at Exit #336~~ Junction I-10, West of Willcox) to MP 340.09 (Junction SR 186)	~~R17-6-406; R17-6-408~~ R17-6-402			Over 14' - 16' = F/R	

Route	Restriction Location (MP = Milepost)	Transport Subject to:	Height	Length	Width	Weight (in lbs)
Escort requirements: F = front escort, R = rear escort, F/R = front and rear escort, and LE = law enforcement escort						
State Business 10	MP 340.09 (Junction SR 186) to ~~MP 344.66 (End SB 10 at I-10 Exit #344)~~ MP 344.80 (Junction I-10, East of Willcox)	~~R17-6-406; R17-6-408~~ R17-6-402			Over 14' - 16' = F/R	
State Business 10	~~MP 362.48~~ MP 362.29 (Junction I-10, West of Bowie) to ~~MP 366.88 (End SB 10 at I-10 Exit #366)~~ MP 367.00 (Junction I-10, East of Bowie)	~~R17-6-406; R17-6-408~~ R17-6-402			Over 14' - 16' = F/R	
State Business 10	~~MP 378.69 (West Simon) to MP 382.50 (End SB 10 at I-10 Exit #382)~~ MP 378.48 (Junction I-10, West of San Simon) to MP 382.74 (Junction I-10, East of San Simon)	~~R17-6-406; R17-6-408~~ R17-6-402			Over 14' - 16' = F/R	
~~State Business 19~~	~~MP 0.00 (US/Mexico Border) to MP 1.53 (Junction SR 82)~~	~~R17-6-406; R17-6-408~~			~~Over 14' - 16' = F/R~~	
~~State Business 19~~	~~MP 1.53 (Junction SR 82) to MP 1.66 (Railroad Underpass)~~	~~R17-6-406; R17-6-408~~			~~Over 14' - 16' = F/R~~	
~~State Business 19~~	~~MP 1.66 (Railroad Underpass - Structure 980)~~	~~R17-6-406; R17-6-408~~	~~15' 3"~~		~~Over 14' - 16' = F/R~~	
~~State Business 19~~	~~MP 1.66 (Railroad Underpass) to MP 5.88 (End SB 19 at I-19)~~	~~R17-6-406; R17-6-408~~			~~Over 14' - 16' = F/R~~	
State Business 19	MP 0.00 (US/Mexico Border) to MP 1.52 (Junction SR 82)	R17-6-402			Over 14' - 16' = F/R	
State Business 19	MP 1.52 (SR82 & Railroad Underpass - Structure 980)	R17-6-402	15' 3"		Over 14' - 16' = F/R	
State Business 19	MP 1.52 (Junction SR82) to MP 5.88 (End SB 19 at Junction I-19)	R17-6-402			Over 14' - 16' = F/R	
State Business 40	MP 138.81 (West Seligman) to MP 142.20 (I-40 Underpass)	~~R17-6-406; R17-6-408~~ R17-6-402			Over 14' - 16' = F/R	
State Business 40	MP 142.20 (I-40 Underpass - Structure 1007)	~~R17-6-406; R17-6-408~~ R17-6-402	15' 4"		Over 14' - 16' = F/R	
State Business 40	MP 142.20 (I-40 Underpass) to MP 142.21 (Railroad Underpass)	~~R17-6-406; R17-6-408~~ R17-6-402			Over 14' - 16' = F/R	
State Business 40	MP 142.21 (Railroad Underpass - Structure 1273)	~~R17-6-406; R17-6-408~~ R17-6-402	15' 3"		Over 14' - 16' = F/R	
State Business 40	MP 142.21 (Railroad Underpass) to MP 143.04 (End SB 40 at I-40 Exit #123)	~~R17-6-406; R17-6-408~~ R17-6-402			Over 14' - 16' = F/R	
State Business 40	MP 144.82 (West Ash Fork) to MP 146.33 (East Ash Fork)	~~R17-6-406; R17-6-408~~ R17-6-402			Over 14' - 16' = F/R	
State Business 40	MP 146.33 (East Ash Fork) to MP 165.28 (Railroad Underpass)	~~R17-6-406; R17-6-408~~ Local Requirements			~~Over 14' - 16' = F/R~~ Local Requirements	Yavapai County Jurisdiction.
State Business 40	MP 165.28 (Railroad Underpass - Structure 1575)	~~R17-6-406; R17-6-408~~ Local Requirements	~~14' 7"~~ 14' 8"		~~Over 14' - 16' = F/R~~ Local Requirements	Coconino County Jurisdiction.
State Business 40	MP 165.28 (Railroad Underpass) to MP 191.44 (Junction I-40)	~~R17-6-406; R17-6-408~~ Local Requirements			~~Over 14' - 16' = F/R~~ Local Requirements	Coconino County Jurisdiction.
State Business 40	MP 191.44 (Junction I-40) to MP 191.69 (I-40 Underpass)	~~R17-6-406; R17-6-408~~ Local Requirements			~~Over 12' - 16' = F/R~~ Local Requirements	Coconino County Jurisdiction.

Route	Restriction Location (MP = Milepost)	Transport Subject to:	Height	Length	Width	Weight (in lbs)
Escort requirements: F = front escort, R = rear escort, F/R = front and rear escort, and LE = law enforcement escort						
State Business 40	MP 191.69 Northbound (I-40 East Underpass - Structure 1129)	~~R17-6-406; R17-6-408~~ Local Requirements	15’		~~Over 12’ - 16’ = F/R~~ Local Requirements	Coconino County Jurisdiction.
State Business 40	MP 191.69 Southbound (I-40 East Underpass - Structure 1129)	~~R17-6-406; R17-6-408~~ Local Requirements	14’ 3”		~~Over 12’ - 16’ = F/R~~ Local Requirements	Coconino County Jurisdiction.
State Business 40	MP 191.69 Northbound (I-40 West Underpass - Structure 1128)	~~R17-6-406; R17-6-408~~ Local Requirements	14’ 3”		~~Over 12’ - 16’ = F/R~~ Local Requirements	Coconino County Jurisdiction.
State Business 40	MP 191.69 Southbound (I-40 West Underpass - Structure 1128)	~~R17-6-406; R17-6-408~~ Local Requirements	15’ 8”		~~Over 12’ - 16’ = F/R~~ Local Requirements	Coconino County Jurisdiction.
~~State Business 40~~	~~MP 191.69 (I-40 Underpass) to MP 195.96 (Railroad Underpass)~~	~~R17-6-406; R17-6-408~~			~~Over 12’ - 16’ = F/R~~	~~Coconino County Jurisdiction: MP 191.69 to MP 193.16~~
State Business 40	MP 191.69 (I-40 Underpass) to MP 193.16 (Flagstaff City Limit)	Local Requirements			Local Requirements	Coconino County Jurisdiction.
State Business 40	MP 193.16 (Flagstaff City Limit) to MP 195.96 (Railroad Underpass)	R17-6-402			Over 12’ - 16’ = F/R	
State Business 40	MP 195.96 (Railroad Underpass - Structure 529)	~~R17-6-406; R17-6-408~~ R17-6-402	13’ 9”		Over 12’ - 16’ = F/R	
State Business 40	MP 195.96 (Railroad Underpass) to MP 196.14 (Junction US 180)	~~R17-6-406; R17-6-408~~ R17-6-402			Over 12’ - 16’ = F/R	
~~State Business 40~~	~~MP 196.14 (Junction US 180) to MP 200.32 (Junction US 89)~~	~~R17-6-406; R17-6-408~~			~~Over 12’ - 16’ = F/R~~	~~City of Flagstaff Jurisdiction: MP 199.91 to MP 200.32~~
~~State Business 40~~	~~MP 200.32 (Junction US 89) to MP 200.99 (Junction I-40)~~	~~R17-6-406; R17-6-408~~			~~Over 12’ - 16’ = F/R~~	~~City of Flagstaff Jurisdiction~~
State Business 40	MP 196.14 (Junction US 180) to MP 199.91 (Fanning Drive TI)	R17-6-402			Over 12’ - 16’ = F/R	
State Business 40	MP 199.91 (Fanning Drive TI) to MP 200.99 (Junction I-40)	Local Requirements			Local Requirements	City of Flagstaff Jurisdiction.
State Business 40	MP 274.48 (West Joseph City) to MP 277.33 (East Joseph City)	~~R17-6-406; R17-6-408~~ R17-6-402			Over 14’ - 16’ = F/R	
State Business 40	MP 285.00 (West of Holbrook) to MP 286.68 (Junction SR 77)	~~R17-6-406; R17-6-408~~ R17-6-402			Over 14’ - 16’ = F/R	
State Business 40	MP 286.68 (Junction SR 77) to MP 287.39 (Holbrook Middle I-40 Underpass)	~~R17-6-406; R17-6-408~~ R17-6-402			Over 14’ - 16’ = F/R	
State Business 40	287.39 (Holbrook Middle I-40 Underpass) to MP 289.80 (I-40 Underpass, East of Holbrook)	~~R17-6-406; R17-6-408~~ R17-6-402			Over 14’ - 16’ = F/R	
State Business 40	MP 289.80 (~~East Holbrook,~~ I-40 Underpass, East of Holbrook - Structure 1369)	~~R17-6-406; R17-6-408~~ R17-6-402	14’ 8”		Over 14’ - 16’ = F/R	
State Business 40	289.80 (I-40 Underpass, East of Holbrook) to MP 290.06 (I-40 TI, East of Holbrook)	R17-6-402			Over 14’ - 16’ = F/R	
State Business 79	MP 132.17 (Junction SR 79) to MP 134.03 (Junction SR 79)	~~R17-6-406; R17-6-408~~ R17-6-402			Over 14’ - 16’ = F/R	
State Route 24	MP 0.00 (Junction SR 202 Loop) to MP 1.00 (Ellsworth Road)	R17-6-402; R17-6-403; R17-6-404			Over 14’ - 16’ = R	

Route	Restriction Location (MP = Milepost)	Transport Subject to:	Height	Length	Width	Weight (in lbs)
Escort requirements: F = front escort, R = rear escort, F/R = front and rear escort, and LE = law enforcement escort						
State Route 40 Spur	MP 0.03 (Beginning of route, West of Winslow) to MP 1.03 (End of route)	R17-6-402			Over 14' - 16' = F/R	
~~State Route 51~~	~~MP 0.00 (Junctions I-10 and SR Loop 202) to MP 13.62 (Bell Road)~~	~~R17-6-404; R17-6-405; R17-6-406; R17-6-408; R17-6-409~~			~~Over 14' - 16' = R~~	
~~State Route 51~~	~~MP 13.62 Northbound (Bell Road Underpass - Structure 2477)~~	~~R17-6-404; R17-6-405; R17-6-406; R17-6-408; R17-6-409~~	~~15' 7"~~		~~Over 14' - 16' = R~~	
~~State Route 51~~	~~MP 13.62 Southbound (Bell Road Underpass - Structure 2477)~~	~~R17-6-404; R17-6-405; R17-6-406; R17-6-408; R17-6-409~~	~~14' 10"~~		~~Over 14' - 16' = R~~	
~~State Route 51~~	~~MP 13.62 (Bell Road) to MP 15.90 (Junction SR Loop 101)~~	~~R17-6-404; R17-6-405; R17-6-406; R17-6-408; R17-6-409~~			~~Over 14' - 16' = R~~	
State Route 51	MP 0.00 Northbound McDowell Road Off Ramp (I-10 Overpass - Structure 2126)	R17-6-402; R17-6-403; R17-6-404	15' 2"		Over 14' - 16' = R	
State Route 51	MP 0.00 (Junction I-10 and SR 202 Loop) to MP 15.90 (Junction SR 101 Loop)	R17-6-402; R17-6-403; R17-6-404			Over 14' - 16' = R	
State Route 61	MP 352.88 (Junction US 60) to MP 381.86 (Junction US 180)	~~R17-6-406; R17-6-408~~ R17-6-402			Over 12' - 16' = F/R	
State Route 61	MP 416.49 (Junction US 191) to MP 430.26 (New Mexico State Line)	~~R17-6-406; R17-6-408~~ R17-6-402			Over 10' - 16' = F/R	
State Route 64	MP 185.46 (Junction I-40 in Williams) to MP 237.10 (Grand Canyon National Park)	~~R17-6-406; R17-6-408~~ R17-6-402			Over 12' - 16' = F/R	
State Route 64	MP 267.10 (Grand Canyon National Park) to MP 295.83 (Junction US 89)	~~R17-6-406; R17-6-408~~ R17-6-402			Over 12' - 16' = F/R	
State Route 66	MP 56.70 (Junction I-40) to MP 123.10 (Route end)	~~R17-6-406; R17-6-408~~ R17-6-402			Over 14' - 16' = F/R	
State Route 67	MP 579.36 (Junction US 89A) to MP 610.26 (North Rim)	~~R17-6-406; R17-6-408;~~ R17-6-402; Seasonal Road Closure			Over 12' - 14' = F/R Over 14' - 16' = F/R + 2 LE	~~20,000~~ Legal weight only, as provided under R17-6-102, Table 1. Over 80,000 requires class C permit.
State Route 68	MP 1.10 (Junction SR 95) to MP 27.10 (Junction US 93)	~~R17-6-405; R17-6-406; R17-6-408; R17-6-409~~ R17-6-402; R17-6-403			Over 14' - 16' = F/R	
State Route 69	MP 262.20 (Junction I-17) to MP 296.00 (Junction SR 89)	~~R17-6-405; R17-6-406; R17-6-408; R17-6-409~~ R17-6-402; R17-6-403			Over 14' - 16' = F/R	
State Route 71	MP 86.10 (Junction US 60) to MP 102.90 (SR 71 Overpass)	~~R17-6-406; R17-6-408~~ R17-6-402			Over 12' - 16' = F/R	
State Route 71	MP 102.90 (SR 71 Overpass - Structure 842)	~~R17-6-406; R17-6-408~~ R17-6-402	14' 10"		Over 12' - 16' = F/R	
State Route 71	MP 102.90 (SR 71 Overpass) to MP 109.70 (Junction SR 89)	~~R17-6-406; R17-6-408~~ R17-6-402			Over 12' - 16' = F/R	
State Route 72	MP 13.10 (Junction SR 95) to MP 49.60 (Junction US 60)	~~R17-6-406; R17-6-408~~ R17-6-402			Over 12' - 14' = F/R Over 14' - 16' = F/R + 2 LE	
State Route 73	MP 310.40 (Junction US 60) to MP 334.72 (White River)	~~R17-6-406; R17-6-408~~ R17-6-402			Over 10' - 14' = F/R Over 14' - 16' = F/R + 2 LE	

Route	Restriction Location (MP = Milepost)	Transport Subject to:	Height	Length	Width	Weight (in lbs)
Escort requirements: F = front escort, R = rear escort, F/R = front and rear escort, and LE = law enforcement escort						
~~State Route 73~~	~~MP 334.72 (White River) to MP 357.72 (Junction SR 260)~~	~~R17-6-406; R17-6-408~~			~~Over 14' - 16' = F/R~~	
State Route 73	MP 334.72 (White River) to MP 350.70 (Coal Mine Canyon)	R17-6-402			Over 14' - 16' = F/R	
State Route 73	MP 350.70 (Coal Mine Canyon Bridge - Structure 982)	R17-6-402			Over 14' - 16' = F/R	Class A permitted vehicles with a gross weight of: 150,000 or less - no additional restrictions; 150,001 through 250,000 - drivers shall: Coordinate road closures by or under the direction of 2 law enforcement escorts; and Cross on center of bridge at a constant speed of no more than 10 mph while on bridge. Class C permitted vehicles with a gross weight of: 250,001 or more require special analysis and approval from the ADOT Bridge Group.
State Route 73	MP 350.70 (Coal Mine Canyon) to MP 357.72 (Junction SR 260)	R17-6-402			Over 14' - 16' = F/R	
State Route 74	MP 0.00 (Junction US 60) to MP 30.84 (Junction I-17)	~~R17-6-406; R17-6-408~~ R17-6-402			Over 14' - 16' = F/R	
State Route 75	MP 378.92 (Junction US 70) to MP 398.43 (Junction US 191)	~~R17-6-406; R17-6-408~~ R17-6-402			Over 14' - 16' = F/R	
~~State Route 77~~	~~MP 68.05 (Junction I-10 in Tucson) to MP 74.84 (Ina Road)~~	~~R17-6-404; R17-6-405; R17-6-406; R17-6-408; R17-6-409~~			~~Over 14' - 16' = F/R~~	
State Route 77	MP 68.05 (Junction I-10 at W. Miracle Mile) to MP 69.54 (N. Oracle Road)	R17-6-402; R17-6-403; R17-6-404			Over 14' - 16' = F/R	
State Route 77	MP 69.54 (N. Oracle Road) to MP 74.84 (Ina Road)	R17-6-402; R17-6-403; R17-6-404			Over 14' - 16' = F/R	
State Route 77	MP 74.84 (Ina Road) to MP ~~79.48~~ 81.82 (Junction SR 989 at Tangerine Road)	~~R17-6-404; R17-6-405; R17-6-406; R17-6-408; R17-6-409~~ R17-6-402; R17-6-403; R17-6-404			Over 14' - 16' = F/R	
State Route 77	MP ~~79.48~~ 81.82 (Junction SR 989 at Tangerine Road) to MP 91.13 (Junction SR 79)	~~R17-6-406; R17-6-408~~ R17-6-402			Over 14' - 16' = F/R	
State Route 77	MP 91.13 (Junction SR 79) to MP 113.60 (Mammoth Town Limit)	~~R17-6-406; R17-6-408~~ R17-6-402			Over 14' - 16' = F/R	
State Route 77	MP 113.60 (Mammoth Town Limit) to MP 134.80 (Junction SR 177)	~~R17-6-406; R17-6-407; R17-6-408~~ R17-6-402; R17-6-407		80'+ ~~unarticulated~~ non-articulated requires F/R; 110'+ articulated requires F/R	Over 12' - 14' = F/R Over 14' - 16' = F/R + 2 LE	

Route	Restriction Location (MP = Milepost)	Transport Subject to:	Height	Length	Width	Weight (in lbs)
Escort requirements: F = front escort, R = rear escort, F/R = front and rear escort, and LE = law enforcement escort						
State Route 77	MP 134.80 (Junction SR 177) to MP 170.90 (Junction US 70)	~~R17-6-406; R17-6-408~~ R17-6-402		80'+ ~~unarticulated~~ non-articulated requires F/R; 110'+ articulated requires F/R	Over 12' - 14' = F/R Over 14' - 16' = F/R + 2 LE	
State Route 77	MP 342.20 (Junction US 60, Show Low) to MP 361.05 (Junction SR 277)	~~R17-6-406; R17-6-408~~ R17-6-402			Over 12' - 16' = F/R	
State Route 77	MP 361.05 (Junction SR 277) to MP 386.20 (Junction SR 377)	~~R17-6-406; R17-6-408~~ R17-6-402			Over 12' - 16' = F/R	
State Route 77	MP 386.20 (Junction SR 377) to MP 387.81 (Junction US 180)	~~R17-6-406; R17-6-408~~ R17-6-402			Over 12' - 16' = F/R	
State Route 77	MP 387.81 (Junction US 180) to MP 388.67 (Junction SB 40, Holbrook)	~~R17-6-406; R17-6-408~~ R17-6-402			Over 12' - 16' = F/R	
State Route 77	MP 395.05 (I-40 ~~east~~ East of Holbrook) to MP 408.93 (End of State Route at Navajo Nation boundary)	~~R17-6-406; R17-6-408~~ R17-6-402			Over 12' - 16' = F/R	
State Route 78	MP 154.55 (Junctions SR 75 and US 191) to MP 174.73 (New Mexico State Line)	~~R17-6-406; R17-6-408~~ R17-6-402			Over 12' - 14' = F/R Over 14' - 16' = F/R + 2 LE	
State Route 79	MP 91.14 (Junction SR 77) to MP 132.17 (Junction SB 79)	~~R17-6-406; R17-6-408~~ R17-6-402			Over 14' - 16' = F/R + 2 LE	
State Route 79	MP 134.03 (Junction SB 79) to MP 150.28 (Junction US 60)	~~R17-6-406; R17-6-408~~ R17-6-402			Over 14' - 16' = F/R	
State Route 80	MP 293.27 (Junction SB 10 in Benson) to MP 339.06 (Mule Pass Tunnel)	~~R17-6-406; R17-6-408~~ R17-6-402			Over 14' - 16' = F/R	
State Route 80	MP 339.06 (Mule Pass Tunnel - Structure 538)	~~R17-6-406; R17-6-408~~ R17-6-402	14'		Over 14' - 16' = F/R	
State Route 80	MP 339.06 (Mule Pass Tunnel) to MP 343.01 (Lowell Underpass)	~~R17-6-406; R17-6-408~~ R17-6-402			Over 14' - 16' = F/R	
State Route 80	MP 343.01 (Lowell Underpass - Structure 269)	~~R17-6-406; R17-6-408~~ R17-6-402	14' 7"		Over 14' - 16' = F/R	
State Route 80	MP 343.01 (Lowell Underpass) to MP 348.15 (~~Mulepass~~ Mule Pass - Lowell Arch)	~~R17-6-406; R17-6-408~~ R17-6-402			Over 14' - 16' = F/R	
State Route 80	MP 348.15 (~~Mulepass~~ Mule Pass - Lowell Arch - Structure 130)	~~R17-6-406; R17-6-408~~ R17-6-402			Over 14' - 16' = F/R	Legal weight only, as provided under R17-6-102, Table 1.
State Route 80	MP 348.15 (~~Mulepass~~ Mule Pass - Lowell Arch) to MP 352.38 (Glance Creek Bridge)	~~R17-6-406; R17-6-408~~ R17-6-402			Over 14' - 16' = F/R	
State Route 80	MP 352.38 (Glance Creek Bridge - Structure 237)	~~R17-6-406; R17-6-408~~ R17-6-402			Over 14' - 16' = F/R	Legal weight only, as provided under R17-6-102, Table 1.
State Route 80	MP 352.38 (Glance Creek Bridge) to MP 364.66 (Douglas)	~~R17-6-406; R17-6-408~~ R17-6-402			Over 14' - 16' = F/R	
State Route 80	MP 364.66 (Douglas) to MP 366.12 (Junction US 191)	~~R17-6-406; R17-6-408~~ R17-6-402			Over 12' - 16' = F/R	
State Route 80	MP 366.12 (Junction US 191) to MP 415.39 (New Mexico State Line)	~~R17-6-406; R17-6-408~~ R17-6-402			Over 12' - 16' = F/R	

Route	Restriction Location (MP = Milepost)	Transport Subject to:	Height	Length	Width	Weight (in lbs)
Escort requirements: F = front escort, R = rear escort, F/R = front and rear escort, and LE = law enforcement escort						
State Route 82	MP 0.00 (Junction SB 19) to MP 32.36 (Junction SR 83)	~~R17-6-406; R17-6-408~~ R17-6-402			Over 12' - 14' = F/R Over 14' - 16' = F/R + 3 LE	
State Route 82	MP 32.36 (Junction SR 83) to MP 51.59 (Junction SR 90)	~~R17-6-406; R17-6-408~~ R17-6-402			Over 12' - 14' = F/R Over 14' - 16' = F/R + 3 LE	
~~State Route 82~~	~~MP 51.59 (Junction SR 90) to MP 67.57 (Junction SR 80)~~	~~R17-6-406; R17-6-408~~			~~Over 12' - 14' = F/R~~ ~~Over 14' - 16' = F/R + 2 LE~~	
State Route 82	MP 51.59 (Junction SR 90) to MP 61.20 (San Pedro River)	R17-6-402			Over 12' - 14' = F/R Over 14' - 16' = F/R + 2 LE	
State Route 82	MP 61.20 (San Pedro River Bridge - Structure 403)	R17-6-402			Over 12' - 14' = F/R Over 14' - 16' = F/R + 2 LE	Class A permitted vehicles with a gross weight of: 150,000 or less - no additional restrictions; 150,001 through 250,000 - drivers shall: Coordinate road closures by or under the direction of 2 law enforcement escorts; and Cross on center of bridge at a constant speed of no more than 10 mph while on bridge. Class C permitted vehicles with a gross weight of: 250,001 or more require special analysis and approval from the ADOT Bridge Group.
State Route 82	MP 61.20 (San Pedro River) to MP 67.57 (Junction SR 80)	R17-6-402			Over 12' - 14' = F/R Over 14' - 16' = F/R + 2 LE	
State Route 83	MP 3.19 (Parker Canyon Lake) to MP 31.63 (Junction SR 82)	~~R17-6-406; R17-6-408~~ R17-6-402			Over 10' - 14' = F/R Over 14' - 16' = F/R + 2 LE	
State Route 83	MP 31.63 (Junction SR 82) to MP 58.00 (Junction I-10)	~~R17-6-406; R17-6-408~~ R17-6-402			Over 12' - 14' = F/R Over 14' - 16' = F/R + 2 LE	
State Route 84	MP 155.13 (Junction I-8) to MP 177.60 (Railroad Underpass)	~~R17-6-406; R17-6-408~~ R17-6-402			Over 14' - 16' = F/R	
State Route 84	MP 177.66 Eastbound (Railroad Underpass - Structure 143)	~~R17-6-406; R17-6-408~~ R17-6-402	13' 3"		Over 14' - 16' = F/R	
State Route 84	MP 177.66 Westbound (Railroad-Underpass - Structure 1062)	~~R17-6-406; R17-6-408~~ R17-6-402	14'		Over 14' - 16' = F/R	
State Route 84	MP 177.60 (Railroad Underpass) to MP 177.97 (Junctions SR 387 and SR 287)	~~R17-6-406; R17-6-408~~ R17-6-402			Over 14' - 16' = F/R	
State Route 85	MP 0.00 (Junction SB 8) to MP 0.35 (I-8 Underpass)	~~R17-6-406; R17-6-408~~ R17-6-402			Over 14' - 16' = F/R + 2 LE	
State Route 85	MP 0.35 (I-8 Underpass - Structure 702)	~~R17-6-406; R17-6-408~~ R17-6-402	14' 5"		Over 14' - 16' = F/R + 2 LE	
State Route 85	MP 0.35 (I-8 Underpass) to MP 0.37 (Railroad Underpass)	~~R17-6-406; R17-6-408~~ R17-6-402			Over 14' - 16' = F/R + 2 LE	
State Route 85	MP 0.37 (Railroad Underpass - Structure 734)	~~R17-6-406; R17-6-408~~ R17-6-402	14' 5"		Over 14' - 16' = F/R + 2 LE	
State Route 85	MP 0.37 (Railroad Underpass) to MP 0.60 (I-8 Overpass)	~~R17-6-406; R17-6-408~~ R17-6-402			Over 14' - 16' = F/R + 2 LE	

Route	Restriction Location (MP = Milepost)	Transport Subject to:	Height	Length	Width	Weight (in lbs)
Escort requirements: F = front escort, R = rear escort, F/R = front and rear escort, and LE = law enforcement escort						
State Route 85	MP 0.60 (I-8 Overpass WB/EB - Structures 1557 & 1558)	~~R17-6-406; R17-6-408~~ R17-6-402	14' 11"		Over 14' - 16' = F/R + 2 LE	
State Route 85	MP 0.60 (I-8 Overpass) to MP 39.70 (Town of Ajo)	~~R17-6-406; R17-6-408~~ R17-6-402			Over 14' - 16' = F/R + 2 LE	
State Route 85	MP 39.70 (Town of Ajo) to MP 80.69 (US/Mexico Border)	~~R17-6-406; R17-6-408~~ R17-6-402			Over 12' - 14' = F/R Over 14' - 16' = F/R + 2 LE	
State Route 85	MP 120.31 (Junction SB 8) to MP 154.48 (Junction I-10)	~~R17-6-405; R17-6-406; R17-6-408; R17-6-409~~ R17-6-402; R17-6-403			Over 14' - 16' = F/R	
State Route 86	MP 53.00 (Junction SR 85) to MP 150.42 (Junction SR 286)	~~R17-6-406; R17-6-408~~ R17-6-402			Over 12' - 14' = F/R Over 14' - 16' = F/R + 2 LE	
State Route 86	MP 150.42 (Junction SR 286) to MP 164.04 (Camino Verde Road)	~~R17-6-406; R17-6-408~~ R17-6-402			Over 14' - 16' = F/R	
State Route 86	MP 164.04 (Camino Verde Road) to MP 171.44 (Junction I-19)	~~R17-6-404; R17-6-405; R17-6-406; R17-6-408; R17-6-409~~ R17-6-402; R17-6-403; R17-6-404			Over 14' - 16' = F/R	
~~State Route 87~~	~~MP 115.20 (Junction I-10) to MP 115.20 (I-10 Overpass)~~	~~R17-6-406; R17-6-408~~			~~Over 14' - 16' = F/R~~	
State Route 87	MP 115.20 Northbound (Junction I-10 Overpass)	~~R17-6-406; R17-6-408~~ R17-6-402	15' 3"		Over 14' - 16' = F/R	Pinal County Jurisdiction.
State Route 87	MP 115.20 Southbound (Junction I-10 Overpass)	~~R17-6-406; R17-6-408~~ R17-6-402	15' 2"		Over 14' - 16' = F/R	Pinal County Jurisdiction.
~~State Route 87~~	~~MP 115.20 (Junction I-10) to MP 162.67 (Junction Ocotillo Road in Chandler)~~	~~R17-6-406; R17-6-408~~			~~Over 14' - 16' = F/R~~	
~~State Route 87~~	~~MP 172.22 (Junction US 60) to MP 176.74 (Junction SR 202 Overpass)~~	~~R17-6-405; R17-6-406; R17-6-408; R17-6-409~~			~~Over 14' - 16' = F/R~~	
State Route 87	MP 115.77 (Milligan Road) to MP 125.81 (Junction SR 287)	R17-6-402			Over 14' - 16' = F/R	
State Route 87	MP 125.81 (Junction SR 287) to MP 141.47 (Junction SR 387)	R17-6-402			Over 14' - 16' = F/R	
State Route 87	MP 141.47 (Junction SR 387) to MP 146.04 (Junction SR 187)	R17-6-402			Over 14' - 16' = F/R	
State Route 87	MP 146.04 (Junction SR 187 to MP 159.62 (Hunt Highway, Junction SR 587)	R17-6-402			Over 14' - 16' = F/R	
State Route 87	MP 159.62 (Hunt Highway, Junction SR 587) to MP 162.67 (Ocotillo Road, Chandler)	R17-6-402			Over 14' - 16' = F/R	
State Route 87	MP 162.67 (Ocotillo Road, Chandler) to MP 165.36 (Junction SR 202 Loop)	Local Requirements			Local Requirements	City of Chandler Jurisdiction.
State Route 87	MP 165.36 (Junction SR 202 Loop) to MP 170.20 (Western Canal Crossing)	Local Requirements			Local Requirements	City of Chandler Jurisdiction.
State Route 87	MP 170.20 (Western Canal Crossing) to MP 172.50 (Junction US 60)	R17-6-402; R17-6-403			Over 14' - 16' = F/R	
State Route 87	MP 172.50 (Junction US 60) to MP 176.74 (Junction SR 202 Loop)	Local Requirements			Local Requirements	City of Mesa Jurisdiction.
State Route 87	MP 176.74 (Junction SR 202 Loop Overpass)	~~R17-6-405; R17-6-406; R17-6-408; R17-6-409~~ R17-6-402; R17-6-403	15' 8"		Over 14' - 16' = F/R	

Route	Restriction Location (MP = Milepost)	Transport Subject to:	Height	Length	Width	Weight (in lbs)
Escort requirements: F = front escort, R = rear escort, F/R = front and rear escort, and LE = law enforcement escort						
State Route 87	MP 176.74 (Junction SR 202 ~~Overpass~~ Loop) to MP 252.50 (Junction SR 260, Payson)	~~R17-6-405; R17-6-406; R17-6-408; R17-6-409~~ R17-6-402; R17-6-403			Over 14' - 16' = F/R	
State Route 87	MP 252.50 (Junction SR 260, Payson) to MP 278.80 (Junction SR 260)	~~R17-6-406; R17-6-407; R17-6-408~~ R17-6-402; R17-6-407		40'+ requires F/R + 2 LE	Over 12' - 14' = F/R Over 14' - 16' = F/R + 2 LE	
State Route 87	MP 278.80 (Junction SR 260) to MP 340.94 (Junction SR 99)	~~R17-6-406; R17-6-407; R17-6-408~~ R17-6-402; R17-6-407			Over 12' - 14' = F/R Over 14' - 16' = F/R + 3 LE	
State Route 87	MP 340.94 (Junction SR 99) to MP 342.10 (Railroad Underpass, Winslow)	~~R17-6-406; R17-6-407; R17-6-408~~ R17-6-402; R17-6-407			Over 12' - 14' = F/R Over 14' - 16' = F/R + 3 LE	
State Route 87	MP 342.10 (Railroad Underpass, Winslow - Structure 194)	~~R17-6-406; R17-6-407; R17-6-408~~ R17-6-402; R17-6-407	14' 6"		Over 12' - 14' = F/R Over 14' - 16' = F/R + 3 LE	
State Route 87	MP 342.10 (Railroad Underpass, Winslow) to MP 342.23 (Junction SB 40, 3rd Street in Winslow)	~~R17-6-406; R17-6-407; R17-6-408~~ R17-6-402; R17-6-407			Over 12' - 14' = F/R Over 14' - 16' = F/R + 3 LE	
State Route 87	MP 343.56 (Junction SB 40, Transcon Lane in Winslow) to MP 345.52 (Junction I-40)	~~R17-6-406; R17-6-408~~ R17-6-402			Over 12' - 14' = F/R Over 14' - 16' = F/R	
State Route 87	MP 345.52 (Junction I-40) to MP 406.04 (Junction SR 264)	~~R17-6-406; R17-6-408~~ R17-6-402			Over 12' - 14' = F/R Over 14' - 16' = F/R + 2 LE	
State Route 88	MP 193.85 (Junction US 60) to MP 202.84 (Apache Trail Marker)	~~R17-6-406; R17-6-408~~ R17-6-402			~~Over 8' requires class C permit~~ Over 14' - 16' = F/R	
State Route 88	MP 202.84 (Apache Trail Marker) to MP 209.62 (First Water Creek Bridge)	~~R17-6-406; R17-6-408~~ R17-6-402		Over 40' requires class C permit	Over 8' 6" requires class C permit	
State Route 88	MP 209.62 (First Water Creek Bridge - Structure 26)	~~R17-6-406; R17-6-408~~ R17-6-402	~~14' 3"~~ 14' 0"	Over 40' requires class C permit	Over 8' 6" requires class C permit	Legal weight only, as provided under R17-6-102, Table 1.
State Route 88	MP 209.62 (First Water Creek Bridge) to MP 211.05 (Boulder Canyon Bridge)	~~R17-6-406; R17-6-408~~ R17-6-402		Over 40' requires class C permit	Over 8' 6" requires class C permit	
State Route 88	MP 211.05 (Boulder Canyon Bridge - Structure 193)	~~R17-6-406; R17-6-408~~ R17-6-402	~~14' 3"~~ 14'	Over 40' requires class C permit	Over 8' 6" requires class C permit	Legal weight only, as provided under R17-6-102, Table 1.
State Route 88	MP 211.05 (Boulder Canyon Bridge) to MP 220.20 (End of pavement)	~~R17-6-406; R17-6-408~~ R17-6-402		Over 40' requires class C permit	Over 8' 6" requires class C permit	
State Route 88	MP 220.20 (End of pavement) to MP 222.00 (Fish Creek Hill)	~~R17-6-406; R17-6-408~~ R17-6-402		No trucks over 40'	Over 8' 6" requires class C permit	Over 20,000 requires class C permit.
State Route 88	MP 222.00 (Fish Creek Hill) to MP 223.50 (Fish Creek Bridge)	~~R17-6-406; R17-6-408;~~ R17-6-402; One lane road		No trucks over 40'	Over 8' 6" requires class C permit	Over 20,000 requires class C permit.
State Route 88	MP 223.50 (Fish Creek Bridge - Structure 27)	~~R17-6-406; R17-6-408;~~ R17-6-402; One lane bridge		No trucks over 40'	Over 8' 6" requires class C permit	Legal weight only, as provided under R17-6-102, Table 1. Over 20,000 requires class C permit.
State Route 88	MP 223.50 (Fish Creek Bridge) to MP 224.40 (End of one lane road)	~~R17-6-406; R17-6-408~~ R17-6-402		No trucks over 40'	Over 8' 6" requires class C permit	Over 20,000 requires class C permit.
State Route 88	MP 224.40 (End of one lane road) to MP 224.60 (Lewis and Pranty Creek Bridge)	~~R17-6-406; R17-6-408~~ R17-6-402		No trucks over 40'	Over 8' 6" requires class C permit	Over 20,000 requires class C permit.

Route	Restriction Location (MP = Milepost)	Transport Subject to:	Height	Length	Width	Weight (in lbs)
Escort requirements: F = front escort, R = rear escort, F/R = front and rear escort, and LE = law enforcement escort						
State Route 88	MP 224.60 (Lewis and Pranty Creek Bridge - Structure 28)	~~R17-6-406; R17-6-408~~ R17-6-402		No trucks over 40’	Over 8’ 6” requires class C permit	Legal weight only, as provided under R17-6-102, Table 1. Over 20,000 requires class C permit.
State Route 88	MP 224.60 (Lewis and Pranty Creek Bridge) to MP 225.55 (Dry Wash Bridge)	~~R17-6-406; R17-6-408~~ R17-6-402		No trucks over 40’	Over 8’ 6” requires class C permit	Over 20,000 requires class C permit.
State Route 88	MP 225.55 (Dry Wash Bridge - Structure 15)	~~R17-6-406; R17-6-408~~ R17-6-402		No trucks over 40’	Over 8’ 6” requires class C permit	Legal weight only, as provided under R17-6-102, Table 1. Over 20,000 requires class C permit.
State Route 88	MP 225.55 (Dry Wash Bridge) to MP 226.60 (ADOT Maintenance Yard)	~~R17-6-406; R17-6-408~~ R17-6-402		No trucks over 40’	Over 8’ 6” requires class C permit	Over 20,000 requires class C permit.
State Route 88	MP 226.60 (ADOT Maintenance Yard) to MP 233.50 (Pine Creek Bridge)	~~R17-6-406; R17-6-408~~ R17-6-402		Over 40’ requires class C permit	Over 8’ 6” requires class C permit	
State Route 88	MP 233.50 (Pine Creek Bridge - Structure 31)	~~R17-6-406; R17-6-408~~ R17-6-402		Over 40’ requires class C permit	Over 8’ 6” requires class C permit	Legal weight only, as provided under R17-6-102, Table 1.
State Route 88	MP 233.50 (Pine Creek Bridge) to MP 240.57 (Begin Pavement)	~~R17-6-406; R17-6-408~~ R17-6-402		Over 40’ requires class C permit	Over 8’ 6” requires class C permit	
State Route 88	MP 240.57 (Begin Pavement) to MP 242.40 (Junction SR 188)	~~R17-6-406; R17-6-408~~ R17-6-402		Over 40’ requires class C permit	Over 8’ 6” requires class C permit	
~~State Route 89~~	~~MP 258.20 (Junction US 93) to MP 295.00 (Wilhoit)~~	~~R17-6-406; R17-6-408~~			~~Over 12’ - 16’ = F/R~~	
State Route 89	MP 258.20 (Junction US 93) to MP 271.91 (Divided Highway)	R17-6-402			Over 12’ - 16’ = F/R	
State Route 89	MP 271.91 Northbound (Begin Divided Highway) to MP 275.62 (End Divided Highway)	R17-6-402			Over 12’ - 16’ = F/R	
State Route 89	MP 271.91 Southbound (End Divided Highway) to MP 275.62 (Begin Divided Highway)	R17-6-402		Over 40’ requires class C permit	Over 12’ - 16’ = F/R	
State Route 89	MP 275.62 (End Divided Highway) to MP 295.00 (Wilhoit Community Limit)	R17-6-402			Over 12’ - 16’ = F/R	
State Route 89	MP 295.00 (Wilhoit Community Limit) to MP 309.00 (Prescott City ~~Limits~~ Limit)	~~R17-6-406; R17-6-408~~ R17-6-402		Over 40’ requires class C permit	Over 8’ requires class C permit	
State Route 89	MP 309.00 (Prescott City ~~Limits~~ Limit) to MP 309.45 (Granite Creek Bridge #2)	~~R17-6-406; R17-6-408~~ R17-6-402			Over 12’ - 16’ = F/R + 2 LE	
State Route 89	MP 309.45 (Granite Creek Bridge #2 - Structure 106)	~~R17-6-406; R17-6-408~~ R17-6-402			Over 12’ - 16’ = F/R + 2 LE	Legal weight only, as provided under R17-6-102, Table 1.
State Route 89	MP 309.45 (Granite Creek Bridge #2) to MP 320.00 (Willow Creek Road)	~~R17-6-406; R17-6-408~~ R17-6-402			Over 12’ - 14’ = F/R Over 14’ - 16’ = F/R + 2 LE	City of Prescott Jurisdiction: MP 310.26 to MP 319.00 & MP 312.57 to ~~MP 312.95~~ MP 313.99.
~~State Route 89~~	~~MP 320.00 (Willow Creek Road) to MP 345.70 (Hell Canyon Bridge)~~	~~R17-6-406; R17-6-408~~			~~Over 12’ - 14’ = F/R~~ ~~Over 14’ - 16’ = F/R + 2 LE~~	
~~State Route 89~~	~~MP 345.70 (Hell Canyon Bridge - Structure 483)~~	~~R17-6-406; R17-6-408~~			~~Over 12’ - 14’ = F/R~~ ~~Over 14’ - 16’ = F/R + 2 LE~~	~~Legal weight as provided under R17-6-102, Table 1.~~

Route	Restriction Location (MP = Milepost)	Transport Subject to:	Height	Length	Width	Weight (in lbs)
Escort requirements: F = front escort, R = rear escort, F/R = front and rear escort, and LE = law enforcement escort						
~~State Route 89~~	~~345.70 (Hell Canyon Bridge) to MP 363.00 (Junction I-40)~~	~~R17-6-406; R17-6-408~~			~~Over 12' - 14' = F/R~~ ~~Over 14' - 16' = F/R + 2 LE~~	
State Route 89	MP 320.00 (Willow Creek Road) to MP 363.00 (Junction I-40)	R17-6-402			Over 12' - 14' = F/R Over 14' - 16' = F/R + 2 LE	
State Route 89A	MP 317.80 (Junction SR 89) to ~~MP 331.00~~ MP 330.10 (Old Fain Road)	~~R17-6-406; R17-6-408~~ R17-6-402			Over 14' - 16' = F/R	
State Route 89A	~~MP 331.00~~ MP 330.10 (Old Fain Road) to MP 348.00 (Clarkdale)	~~R17-6-406; R17-6-408~~ R17-6-402		Over 50' requires class C permit	Over 8' requires class C permit	
State Route 89A	MP 348.00 (Clarkdale) to MP 355.21 (Junction SR 260)	~~R17-6-406; R17-6-408~~ R17-6-402			Over 14' - 16' = F/R	
State Route 89A	MP 355.21 (Junction SR 260) to MP 374.14 (Junction SR 179)	~~R17-6-406; R17-6-408~~ R17-6-402			Over 14' - 16' = F/R	
State Route 89A	MP 374.14 (Junction SR 179) to MP 375.66 (Midgley/Wilson Canyon Bridge)	~~R17-6-406; R17-6-408~~ R17-6-402		Over 50' requires class C permit	Over 10' - 12' = F/R Over 12' - 16' = F/R + 2 LE	
State Route 89A	MP 375.66 (Midgley/Wilson Canyon Bridge - Structure 232)	~~R17-6-406; R17-6-408~~ R17-6-402		Over 50' requires class C permit	Over 10' - 12' = F/R Over 12' - 16' = F/R + 2 LE	~~Class A permitted vehicles with a gross weight of: 100,000 or less - no additional restrictions; 100,001 through 150,000 - drivers shall: Coordinate road closures by or under the direction of law enforcement; and Cross on center of bridge at a constant speed of no more than 10 mph while on bridge. Class C permits and special analysis and approval from the ADOT Bridge Group are required for vehicles with a gross weight of 150,001 or more.~~ Class A permitted vehicles with a gross weight of: 100,000 or less - no additional restrictions; 100,001 through 150,000 - drivers shall: Coordinate road closures by or under the direction of 2 law enforcement escorts; and Cross on center of bridge at a constant speed of no more than 10 mph while on bridge. 150,001 or more requires a Class C permit with special analysis and approval from the ADOT Bridge Group.
~~State Route 89A~~	~~MP 375.66 (Midgley/Wilson Canyon Bridge) to MP 398.96 (JW Powell Boulevard/I-17)~~	~~R17-6-406; R17-6-408~~		~~Over 50' requires class C permit~~	~~Over 10' - 12' = F/R~~ ~~Over 12' - 16' = F/R + 2 LE~~	
State Route 89A	MP 375.66 (Midgley/Wilson Canyon Bridge) to MP 390.18 (Oak Creek Vista)	R17-6-402		Over 50' requires class C permit	Over 10' - 12' = F/R Over 12' - 16' = F/R + 2 LE	

Route	Restriction Location (MP = Milepost)	Transport Subject to:	Height	Length	Width	Weight (in lbs)
Escort requirements: F = front escort, R = rear escort, F/R = front and rear escort, and LE = law enforcement escort						
State Route 89A	MP 390.18 (Oak Creek Vista) to MP 398.96 (JW Powell Boulevard/I-17)	R17-6-402			Over 10' - 14' = F/R Over 14' - 16' = F/R + 2 LE	
State Route 89A Spur	MP 324.47 (Junction SR 89A) to MP 331.63 (Junction SR 69)	~~R17-6-406; R17-6-408~~ R17-6-402			Over 14' - 16' = F/R	
State Route 90	MP 289.59 (Junction I-10) to MP 336.40 (Junction SR 80)	~~R17-6-405; R17-6-406; R17-6-408; R17-6-409~~ R17-6-402; R17-6-403			Over 14' - 16' = F/R	
State Route 90 Spur	MP 316.88 (Junction SR 90) to MP 317.29 (Buffalo Soldier Trail)	R17-6-402; R17-6-403			Over 14' - 16' = F/R	
~~State Route 92~~	~~MP 321.00 (Junction SR 90) to MP 340.56 (San Pedro River bridge)~~	~~R17-6-406; R17-6-408~~			~~Over 14' - 16' = F/R~~	
~~State Route 92~~	~~MP 340.56 (San Pedro River bridge - Structure 449)~~	~~R17-6-406; R17-6-408~~			~~Over 14' - 16' = F/R + 2 LE~~	~~Class A permitted vehicles with a gross weight of: 100,000 or less - no additional restrictions; 100,001 through 150,000 - drivers shall: Coordinate road closures by or under the direction of law enforcement; and Cross on center of bridge at a constant speed of no more than 10 mph while on bridge. Class C permits and special analysis and approval from the ADOT Bridge Group are required for vehicles with a gross weight of 150,001 or more.~~
~~State Route 92~~	~~MP 340.56 (San Pedro River bridge) to MP 355.00 (Junction SR 80)~~	~~R17-6-406; R17-6-408~~			~~Over 14' - 16' = F/R~~	
State Route 92	MP 321.00 (Junction SR 90) to MP 355.00 (Junction SR 80)	R17-6-402			Over 14' - 16' = F/R	
~~State Route 95~~	~~MP 109.04 (at SB 10 in Quartzsite) to MP 131.68 (Junction SR 72)~~	~~R17-6-406; R17-6-408~~			~~Over 14' - 16' = F/R~~	
State Route 95	MP 109.10 (Main Street in Quartzsite) to MP 131.68 (Junction SR 72)	R17-6-402			Over 14' - 16' = F/R	
State Route 95	MP 131.68 (Junction SR 72) to MP 143.93 (Junction SR 95 Spur)	~~R17-6-406; R17-6-408~~ R17-6-402			~~Over 14' - 16' = F/R~~ Over 12' - 16' = F/R	
State Route 95	MP 143.93 (Junction SR 95 Spur) to MP 144.75 (Airport Road in Parker)	~~R17-6-406; R17-6-408~~ R17-6-402			Over 14' - 16' = F/R	
State Route 95	MP 144.75 (Airport Road in Parker) to MP 187.51 (~~Chenowith~~ Chenoweth Drive in Lake Havasu City)	~~R17-6-406; R17-6-408~~ R17-6-402			Over 14' - 16' = F/R	
State Route 95	MP 187.51 (~~Chenowith~~ Chenoweth Drive in Lake Havasu City) to MP 202.06 (Junction I-40)	~~R17-6-406; R17-6-408~~ R17-6-402			Over 14' - 16' = F/R	
State Route 95	MP 226.08 (California State Line near Needles) to MP 227.32 (Courtwright Road)	~~R17-6-406; R17-6-408~~ R17-6-402			Over 12' - 16' = F/R	
State Route 95	MP 227.32 (Courtwright Road) to MP 249.80 (Junction SR 68)	~~R17-6-405; R17-6-406; R17-6-408; R17-6-409~~ R17-6-402; R17-6-403			Over 14' - 16' = F/R	

Route	Restriction Location (MP = Milepost)	Transport Subject to:	Height	Length	Width	Weight (in lbs)
Escort requirements: F = front escort, R = rear escort, F/R = front and rear escort, and LE = law enforcement escort						
State Route 95A	MP 143.93 (Junction SR 95) to MP 144.85 (California State Line near Parker)	R17-6-402; R17-6-403			Over 14' - 16' = F/R	
State Route 96	MP 0.00 (Bagdad, Town Limit) to MP 4.01 (Junction SR 97)	~~R17-6-406; R17-6-408~~ R17-6-402			Over 10' - 14' = F/R Over 14' - 16' = F/R + 2 LE	
State Route 96	MP 4.01 (Junction SR 97) to MP 10.80 (Santa Maria River Bridge)	~~R17-6-406; R17-6-408~~ R17-6-402			Over 10' - 14' = F/R Over 14' - 16' = F/R + 2 LE	
State Route 96	MP 10.80 (Santa Maria River Bridge - Structure 225)	~~R17-6-406; R17-6-408~~ R17-6-402			Over 10' - 14' = F/R Over 14' - 16' = F/R + 2 LE	~~Class A permitted vehicles with a gross weight of: 100,000 or less - no additional restrictions; 100,001 through 150,000 - drivers shall: Coordinate road closures by or under the direction of law enforcement; and Cross on center of bridge at a constant speed of no more than 10 mph while on bridge. Class C permits and special analysis and approval from the ADOT Bridge Group are required for vehicles with a gross weight of 150,001 or more.~~ Class A permitted vehicles with a gross weight of: 100,000 or less - no additional restrictions; 100,001 through 150,000 - drivers shall: Coordinate road closures by or under the direction of 2 law enforcement escorts; and Cross on center of bridge at a constant speed of no more than 10 mph while on bridge. 150,001 or more requires a Class C permit with special analysis and approval from the ADOT Bridge Group.
State Route 96	MP 10.80 (Santa Maria River Bridge) to MP 21.92 (~~Town of~~ Hillside Town Limit)	~~R17-6-406; R17-6-408~~ R17-6-402			Over 10' - 14' = F/R Over 14' - 16' = F/R + 2 LE	
State Route 97	MP 155.52 (Junction US 93) to MP 166.97 (Junction SR 96)	~~R17-6-406; R17-6-408~~ R17-6-402			Over 12' - 14' = F/R Over 14' - 16' = F/R + 2 LE	
~~State Route 98~~	~~MP 294.67 (Junction US 89) to MP 361.39 (Electrical wire near Junction US 160)~~	~~R17-6-406; R17-6-408~~			~~Over 14' - 16' = F/R~~	
~~State Route 98~~	~~MP 361.39 (Electrical wire near Junction US 160)~~	~~R17-6-406; R17-6-408~~	~~16' 6"~~		~~Over 14' - 16' = F/R~~	
~~State Route 98~~	~~MP 361.39 (Electrical wire near Junction US 160) to MP 361.56 (Junction US 160)~~	~~R17-6-406; R17-6-408~~			~~Over 14' - 16' = F/R~~	
State Route 98	MP 294.67 (Junction US 89) to MP 361.48 (BM&LP Railroad Crossing)	R17-6-402			Over 14' - 16' = F/R	

Route	Restriction Location (MP = Milepost)	Transport Subject to:	Height	Length	Width	Weight (in lbs)
Escort requirements: F = front escort, R = rear escort, F/R = front and rear escort, and LE = law enforcement escort						
State Route 98	MP 361.48 (Black Mesa & Lake Powell Railroad Electric Cables - Low Clearance)	R17-6-402	16’ 6”		Over 14’ - 16’ = F/R	
State Route 98	MP 361.48 (BM&LP Railroad Crossing) to MP 361.56 (Junction US 160)	R17-6-402			Over 14’ - 16’ = F/R	
State Route 99	MP 27.5 (Beginning of route ~~south~~ South of Winslow) to MP 38.19 (Clear Creek Arch Bridge)	~~R17-6-406; R17-6-408~~ R17-6-402			Over 14’ - 16’ = F/R + 2 LE	
State Route 99	MP 38.19 (Clear Creek Arch Bridge - Structure 1038)	~~R17-6-406; R17-6-408~~ R17-6-402			Over 14’ - 16’ = F/R + 2 LE	Legal weight only, as provided under R17-6-102, Table 1.
State Route 99	MP 38.19 (Clear Creek Arch Bridge) to MP 38.90 (Jacks Canyon Bridge)	~~R17-6-406; R17-6-408~~ R17-6-402			Over 14’ - 16’ = F/R + 2 LE	
State Route 99	MP 38.90 (Jacks Canyon Bridge - Structure 1036)	~~R17-6-406; R17-6-408~~ R17-6-402			Over 14’ - 16’ = F/R + 2 LE	Legal weight only, as provided under R17-6-102, Table 1.
State Route 99	MP 38.90 (Jacks Canyon Bridge) to MP 42.65 (Junction SR 87)	~~R17-6-406; R17-6-408~~ R17-6-402			Over 14’ - 16’ = F/R + 2 LE	
State Route 99	MP 52.69 (Junction I-40) to MP 72.16 (Route end at BIA 15)	~~R17-6-406; R17-6-408~~ R17-6-402			Over 14’ - 16’ = F/R + 2 LE	
~~State Route 101~~	~~MP 1.21 (Junction I-10, near 99th Avenue) to MP 61.33 (Junction SR 202)~~	~~R17-6-404; R17-6-405; R17-6-406; R17-6-408; R17-6-409~~			~~Over 14’ - 16’ = R~~	
State Route 101 Loop	MP 1.21 (Junction I-10, near 99th Avenue) to MP 17.24 (75th Avenue TI)	R17-6-402; R17-6-403; R17-6-404			Over 14’ - 16’ = R	
State Route 101 Loop	MP 17.24 Westbound (75th Avenue Overpass) - Structure 2051	R17-6-402; R17-6-403; R17-6-404	15’ 4”		Over 14’ - 16’ = R	
State Route 101 Loop	MP 17.24 (75th Avenue TI) to MP 61.33 (Junction SR 202 Loop)	R17-6-402; R17-6-403; R17-6-404			Over 14’ - 16’ = R	
State Route 143	MP 0.00 (Junction I-10) to MP 3.81 (McDowell Road)	~~R17-6-404; R17-6-405; R17-6-406; R17-6-408; R17-6-409~~ R17-6-402; R17-6-403; R17-6-404			Over 14’ - 16’ = R	
State Route 169	MP 0.00 (Junction SR 69) to MP 15.10 (Junction I-17)	~~R17-6-406; R17-6-408~~ R17-6-402			Over 14’ - 16’ = F/R	
State Route 177	MP 136.31 (Junction SR 77) to MP 167.64 (Junction US 60)	~~R17-6-406; R17-6-408~~ R17-6-402			Over 12’ - 14’ = F/R Over 14’ - 16’ = F/R + 2 LE	
~~State Route 179~~	~~MP 298.95 (Junction I-17) to MP 298.95 (Sedona Road Overpass)~~	~~R17-6-406; R17-6-408~~			~~Over 12’ - 16’ = F/R~~	
State Route 179	MP 298.95 (~~Sedona Road~~ Junction I-17 Overpass - Structures 633 & 1061)	~~R17-6-406; R17-6-408~~ R17-6-402	14’ 2”		Over 12’ - 16’ = F/R	
State Route 179	MP 298.95 (~~Sedona Road~~ Junction I-17 Overpass) to MP 313.44 (Junction SR 89A)	~~R17-6-406; R17-6-408~~ R17-6-402			Over 12’ - 16’ = F/R	
State Route 180A	MP 343.10 (Junction US 180) to MP 353.00 (Junction SR 61)	~~R17-6-406; R17-6-408~~ R17-6-402			Over 14’ requires class C permit	
State Route 181	MP 38.25 (Junction US 191) to MP 61.08 (Junction SR 186)	~~R17-6-406; R17-6-408~~ R17-6-402			Over 12’ - 14’ = F/R Over 14’ - 16’ = F/R + 2 LE	

Route	Restriction Location (MP = Milepost)	Transport Subject to:	Height	Length	Width	Weight (in lbs)
Escort requirements: F = front escort, R = rear escort, F/R = front and rear escort, and LE = law enforcement escort						
State Route 181	MP 61.08 (Junction SR 186) to MP 65.04 (Chiricahua National Monument)	~~R17-6-406; R17-6-408~~ R17-6-402			Over 12' - 14' = F/R Over 14' - 16' = F/R + 2 LE	
~~State Route 186~~	~~MP 326.19 (Junction I-10 in Willcox) to MP 359.42 (Junction SR 181)~~	~~R17-6-406; R17-6-408~~			~~Over 10' - 14' = F/R~~ ~~Over 14' - 16' = F/R + 2 LE~~	
State Route 186	MP 326.19 (Junction I-10 in Willcox) to MP 327.49 (Junction SB 10 in Willcox)	R17-6-402			Over 10' - 14' = F/R Over 14' - 16' = F/R	
State Route 186	MP 328.20 (Junction SB 10 in Willcox) to MP 359.42 (Junction SR 181)	R17-6-402			Over 10' - 14' = F/R Over 14' - 16' = F/R + 2 LE	
State Route 187	MP 186.77 (Junction SR 387) to MP 192.19 (Junction SR 87)	~~R17-6-406; R17-6-408~~ R17-6-402			Over 14' - 16' = F/R	
State Route 188	MP 214.92 (Junction US 60) to MP 229.58 (Junction SR 288)	~~R17-6-406; R17-6-408~~ R17-6-402			Over 14' - 16' = F/R	
State Route 188	MP 229.58 (Junction SR 288) to MP 244.15 (Junction SR 88)	~~R17-6-406; R17-6-408~~ R17-6-402			Over 14' - 16' = F/R	
State Route 188	MP 244.15 (Junction SR 88) to MP 244.28 (Roosevelt Lake Bridge)	~~R17-6-406; R17-6-408~~ R17-6-402			Over 14' - 16' = F/R	
State Route 188	MP 244.28 (Roosevelt Lake Bridge - Structure 2028)	~~R17-6-406; R17-6-408~~ R17-6-402			Over 14' - 16' = F/R ~~+ 2 LE~~	Class A permitted vehicles with a gross weight of: 150,000 or less - no additional restrictions; 150,001 through 250,000 - drivers shall: Coordinate road closures by or under the direction of 2 law enforcement escorts; and Cross on center of bridge at a constant speed of no more than 10 mph while on bridge. ~~Class C permitted vehicles with a gross weight of over 250,000 require special analysis and approval from the ADOT Bridge Group.~~ Class C permitted vehicles with a gross weight of: 250,001 or more require special analysis and approval from the ADOT Bridge Group.
State Route 188	MP 244.28 (Roosevelt Lake Bridge) to MP 250.00 (Rock Creek)	~~R17-6-406; R17-6-408~~ R17-6-402			Over 14' - 16' = F/R	
State Route 188	MP 250.00 (Rock Creek) to MP 260.00 (South of Punkin Center)	~~R17-6-406; R17-6-408~~ R17-6-402			Over 14' - 16' = F/R	
State Route 188	MP 260.00 (South of Punkin Center) to MP 276.78 (Junction SR 87)	~~R17-6-406; R17-6-408~~ R17-6-402			Over 14' - 16' = F/R	
State Route 189	MP 0.00 (US/Mexico Border) to MP 2.88 (Junction I-19)	~~R17-6-406; R17-6-408~~ R17-6-402			Over 14' - 16' = F/R	
State Route 189	MP 2.88 (Junction I-19) to MP 3.75 (Junction SB 19)	~~R17-6-406; R17-6-408~~ R17-6-402			Over 14' - 16' = F/R	
~~State Route 195~~	~~MP 2.50 (Begin route at Avenue E 1/2) to MP 24.39 (Junction I-8)~~	~~R17-6-406; R17-6-408~~			~~Over 14' - 16' = F/R~~	

Route	Restriction Location (MP = Milepost)	Transport Subject to:	Height	Length	Width	Weight (in lbs)
Escort requirements: F = front escort, R = rear escort, F/R = front and rear escort, and LE = law enforcement escort						
State Route 195	MP 5.50 (Begin route at Avenue E) to MP 27.30 (Union Pacific Railroad Underpass)	R17-6-402			Over 14' - 16' = F/R	
State Route 195	MP 27.30 (Union Pacific Railroad Underpass - Structure 2964)	R17-6-402	15' 4"		Over 14' - 16' = F/R	
State Route 195	MP 27.30 (Union Pacific Railroad Underpass) to MP 27.44 (Junction I-8 Eastbound Ramp)	R17-6-402			Over 14' - 16' = F/R	
State Route 195	MP 27.44 (I-8 Eastbound Underpass - Structure 1277)	R17-6-402	15' 4"		Over 14' - 16' = F/R	
State Route 195	MP 27.47 (I-8 Westbound Underpass - Structure 1278)	R17-6-402	15' 4"		Over 14' - 16' = F/R	
State Route 195	MP 27.47 (I-8 Westbound Underpass) to MP 27.61 (Junction I-8 Westbound Ramp)	R17-6-402			Over 14' - 16' = F/R	
State Route 202 Loop	MP 0.00 (~~Junctions~~ Junction I-10 and SR 51) to MP 9.80 (Junction SR 101 Loop)	~~R17-6-404; R17-6-405; R17-6-406; R17-6-408; R17-6-409~~ R17-6-402; R17-6-403; R17-6-404			Over 14' - 16' = R	
State Route 202 Loop	MP 9.80 (Junction SR 101 Loop) to MP 57.24 (Junction I-10)	~~R17-6-404; R17-6-405; R17-6-406; R17-6-408; R17-6-409~~ R17-6-402; R17-6-403; R17-6-404			Over 14' - 16' = R	
State Route 202 Spur	MP 5.15 (Junction SR 202 Loop) to MP 6.28 (Sky Harbor Blvd TI)	R17-6-402; R17-6-403; R17-6-404			Over 14' - 16' = R	
State Route 210	MP 1.00 (Broadway Blvd) to MP 4.78 (Richey Blvd)	R17-6-402; R17-6-403; R17-6-404			Over 14' - 16' = F/R	
State Route 238	MP 24.00 to MP 44.25 (Junction SR 347)	~~R17-6-406; R17-6-408~~ R17-6-402			Over 14' - 16' = F/R	
State Route 260	MP 206.40 (Junction SR 89A) to MP 218.60 (Junction I-17)	~~R17-6-406; R17-6-408~~ R17-6-402			Over 14' - 16' = F/R	
State Route 260	MP 218.60 (Junction I-17) to MP 252.00 (Junction SR 87)	~~R17-6-406; R17-6-408~~ R17-6-402			Over 14' - 16' = F/R	
State Route 260	MP 252.00 (Junction SR 87 in Payson) to MP 256.00 (Star Valley)	~~R17-6-405; R17-6-406; R17-6-408; R17-6-409~~ R17-6-402; R17-6-403			Over 14' - 16' = F/R	
State Route 260	MP 256.00 (Star Valley) to MP 305.67 (Junction SR 277)	~~R17-6-406; R17-6-407; R17-6-408~~ R17-6-402; R17-6-407			Over 12' - 14' = F/R Over 14' - 16' = F/R + 2 LE	
State Route 260	MP 305.67 (Junction SR 277) to MP 340.07 (Junction US 60 in Show Low)	~~R17-6-406; R17-6-408~~ R17-6-402			Over 12' - 14' = F/R Over 14' - 16' = F/R + 2 LE	
State Route 260	MP 341.68 (Junction US 60 in East Show Low) to MP 357.72 (Junction SR 73)	~~R17-6-406; R17-6-408~~ R17-6-402			Over 14' - 16' = F/R	
State Route 260	MP 357.72 (Junction SR 73) to MP 368.60 (Junction SR 473, Hawley Lake Road)	~~R17-6-406; R17-6-408~~ R17-6-402		80'+ requires F/R	Over 12' - 16' = F/R	
State Route 260	MP 368.60 (Junction SR 473, Hawley Lake Road) to MP 377.44 (Junction SR 273)	~~R17-6-406; R17-6-408~~ R17-6-402		80'+ requires F/R	Over 12' - 16' = F/R	
State Route 260	MP 377.44 (Junction SR 273) to MP 385.56 (Junction SR 373, Greer)	~~R17-6-406; R17-6-408~~ R17-6-402		80'+ requires F/R	Over 12' - 16' = F/R	
State Route 260	MP 385.56 (Junction SR 373, Greer) to MP 393.01 (Junction SR 261, Big Lake)	~~R17-6-406; R17-6-408~~ R17-6-402		80'+ requires F/R	Over 12' - 16' = F/R	

Route	Restriction Location (MP = Milepost)	Transport Subject to:	Height	Length	Width	Weight (in lbs)
Escort requirements: F = front escort, R = rear escort, F/R = front and rear escort, and LE = law enforcement escort						
State Route 260	MP 393.01 (Junction SR 261, Big Lake) to MP 398.67 (Junction US 180)	~~R17-6-406; R17-6-408~~ R17-6-402		80'+ requires F/R	Over 12' - 16' = F/R	
State Route 261	MP 394.37 (Junction SR 273) to MP 412.50 (Junction SR 260)	~~R17-6-406; R17-6-408;~~ R17-6-402; Seasonal Road Closure			Over 8' 6" requires class C permit	
State Route 264	MP 321.97 (Junction US 160) to MP 384.23 (Junction SR 87)	~~R17-6-406; R17-6-408~~ R17-6-402			Over 12' - 14' = F/R Over 14' - 16' = F/R + 2 LE	
State Route 264	MP 384.23 (Junction SR 87) to MP 441.02 (Junction US 191)	~~R17-6-406; R17-6-408~~ R17-6-402			Over 12' - 14' = F/R Over 14' - 16' = F/R + 2 LE	
State Route 264	MP 441.02 (Junction US 191) to MP 446.87 (Junction US 191)	~~R17-6-406; R17-6-408~~ R17-6-402			Over 12' - 14' = F/R Over 14' - 16' = F/R ~~+ 2 LE~~	
State Route 264	MP 446.87 (Junction US 191) to MP 476.12 (New Mexico State Line)	~~R17-6-406; R17-6-408~~ R17-6-402			Over 12' - 16' = F/R	
~~State Route 266~~	~~MP 104.60 (Junction US 191) to MP 123.80 (Bonita)~~	~~R17-6-406; R17-6-408~~			~~Over 12' - 16' = F/R~~	
State Route 266	MP 104.60 (Junction US 191) to MP 123.14 (Junction SR 266 Spur in Bonita)	R17-6-402			Over 12' - 16' = F/R	
State Route 266	MP 123.14 (Junction SR 266 Spur in Bonita) to MP 123.80 (Fort Grant Road in Bonita)	R17-6-402			Over 12' - 16' = F/R	
State Route 266 Spur	MP 123.14 (Junction SR 266 in Bonita) to MP 126.17 (Fort Grant)	R17-6-402			Over 12' - 16' = F/R	
State Route 273	MP 377.46 (Junction SR 260) to MP 396.83 (Big Lake Turnoff)	~~R17-6-406; R17-6-408;~~ R17-6-402; Seasonal Road Closure			Over 14' - 16' = F/R	
State Route 277	MP 305.67 (Junction SR 260) to MP 312.62 (Junction SR 377)	~~R17-6-406; R17-6-408~~ R17-6-402			Over 12' - 14' = F/R Over 14' - 16' = F/R + 2 LE	
State Route 277	MP 312.62 (Junction SR 377) to MP 321.20 (Junction SR 277 Spur)	~~R17-6-406; R17-6-408~~ R17-6-402			Over 12' - 14' = F/R Over 14' - 16' = F/R + 2 LE	
State Route 277	MP 321.20 (Junction SR 277 Spur) to MP 336.45 (Junction SR 77)	~~R17-6-406; R17-6-408~~ R17-6-402			Over 12' - 14' = F/R Over 14' - 16' = F/R + 2 LE	
State Route 277 Spur	MP 321.18 (Junction SR 277, West of Snowflake) to MP 322.40 (Old Paper Mill)	R17-6-402			Over 12' - 14' = F/R Over 14' - 16' = F/R + 2 LE	
State Route 286	MP 0.00 (US/Mexico Border) to MP 45.48 (Junction SR 86)	~~R17-6-406; R17-6-408~~ R17-6-402			Over 12' - 14' = F/R Over 14' - 16' = F/R + 2 LE	
State Route 287	MP 111.72 (Junction SR 387) to MP 115.84 (Junction I-10)	~~R17-6-406; R17-6-408~~ R17-6-402			Over 14' - 16' = F/R	
State Route 287	MP 115.84 (Junction I-10) to MP 125.81 (Junction SR 87)	~~R17-6-406; R17-6-408~~ R17-6-402			Over 14' - 16' = F/R	
State Route 287	MP 134.75 (Junction SR 87) to MP 142.96 (Junction SB 79)	~~R17-6-406; R17-6-408~~ R17-6-402			Over 14' - 16' = F/R	
State Route 288	MP 258.10 (Junction SR 188) to MP 262.44 (Salt River Bridge)	~~R17-6-406; R17-6-408~~ R17-6-402		70'+ requires F/R	Over 8' 6" requires class C permit	
State Route 288	MP 262.44 (Salt River Bridge - Structure 37)	~~R17-6-406; R17-6-408~~ R17-6-402	12'	70'+ requires F/R	Over 8' 6" requires class C permit	Legal weight only, as provided under R17-6-102, Table 1.

Route	Restriction Location (MP = Milepost)	Transport Subject to:	Height	Length	Width	Weight (in lbs)
Escort requirements: F = front escort, R = rear escort, F/R = front and rear escort, and LE = law enforcement escort						
State Route 288	MP 262.44 (Salt River Bridge) to MP 311.90 (Route end near Young)	~~R17-6-406; R17-6-408~~ R17-6-402		70'+ requires F/R	Over 8' 6" requires class C permit	
State Route 289	MP 0.00 (Junction I-19) to MP 10.83 (Route end)	~~R17-6-406; R17-6-408~~ R17-6-402			Over 10' - 14' = F/R Over 14' - 16' = F/R + 2 LE	
State Route 303 Loop	MP 103.87 (Junction I-10) to MP 119.28 (Junction US 60, Grand Avenue)	~~R17-6-406; R17-6-408~~ R17-6-402			Over 14' - 16' = ~~F/R + 2 LE~~ R	
State Route 303 Loop	MP 119.28 (Junction US 60, Grand Avenue) to ~~MP 139.27~~ MP 139.14 (Junction I-17 - Sonoran Desert Drive TI)	~~R17-6-406; R17-6-408~~ R17-6-402			Over 14' - 16' = ~~F/R + 2 LE~~ R	
State Route 303 Loop	MP 139.16 Northbound (I-17 South Underpass - Structure 2876)	R17-6-402	15' 7"		Over 14' - 16' = R	
State Route 303 Loop	MP 139.18 Southbound (I-17 North Underpass - Structure 2875)	R17-6-402	15' 10"		Over 14' - 16' = R	
State Route 303 Loop	MP 139.20 (Junction I-17 - Sonoran Desert Drive TI) to MP 139.29 (End of Route East of Junction I-17)	R17-6-402			Over 14' - 16' = R	
State Route 347	MP 160.89 (Junction SR 84) to MP 174.55 (Junction SR 238)	~~R17-6-405; R17-6-406; R17-6-408; R17-6-409~~ R17-6-402; R17-6-403			Over 14' - 16' = F/R	
State Route 347	MP 174.55 (Junction SR 238) to MP 189.31 (Junction I-10)	~~R17-6-405; R17-6-406; R17-6-408; R17-6-409~~ R17-6-402; R17-6-403			Over 14' - 16' = F/R	
~~State Route 366~~	~~MP 113.69 (Junction US 191) to MP 143.20 (Route end)~~	~~R17-6-406; R17-6-408; Seasonal Road Closure~~		~~Over 40' requires class C permit~~	~~Over 8' requires class C permit~~	
State Route 366	MP 113.69 (Junction US 191) to MP 118.60 (Coronado National Forest Marker)	R17-6-402			Over 12' - 14' = F/R	
State Route 366	MP 118.60 (Coronado National Forest Marker) to MP 143.20 (Route end)	R17-6-402; Seasonal Road Closure		Over 40' requires class C permit	Over 8' 6" requires class C permit	
State Route 373	MP 385.65 (Junction SR 260) to MP 390.21 (End of route at Greer)	~~R17-6-406; R17-6-408~~ R17-6-402		80'+ requires F/R	Over 12' - 16' = F/R	
State Route 377	MP 0.00 (Junction SR 277) to MP 33.83 (Junction SR 77)	~~R17-6-406; R17-6-408~~ R17-6-402			Over 12' - 14' = F/R Over 14' - 16' = F/R + 2 LE	
State Route 386	MP 0.00 (Junction SR 86) to MP 12.05 (Kitt Peak National Observatory)	~~R17-6-406; R17-6-408~~ R17-6-402			Over 10' - 14' = F/R Over 14' - 16' = F/R + 2 LE	
State Route 387	MP 0.00 (Junctions SR 84 and SR 287) to MP 8.42 (Junction I-10)	~~R17-6-406; R17-6-408~~ R17-6-402			Over 14' - 16' = F/R	
State Route 387	MP 8.42 (Junction I-10) to MP 15.72 (Junction SR 87)	~~R17-6-406; R17-6-408~~ R17-6-402			Over 14' - 16' = F/R	
State Route 389	MP 0.00 (Utah State Line) to MP 32.60 (Junction US 89A)	~~R17-6-406; R17-6-408~~ R17-6-402			Over 14' - 16' = F/R	
State Route 473	MP 0.00 (Junction SR 260) to MP 10.03 (Route end at Hawley Lake)	~~R17-6-406; R17-6-408;~~ R17-6-402; Seasonal Road Closure		60'+ requires F/R	Over 10' - 14' = F/R Over 14' requires class C permit	20,000
State Route 564	MP 374.28 (Junction US 160) to MP 383.46 (Route end)	~~R17-6-406; R17-6-408~~ R17-6-402			Over 12' - 14' = F/R Over 14' requires class C permit	
~~State Route 587~~	~~MP 218.74 (Junction SR 87) to MP 225.14 (Junction I-10)~~	~~R17-6-406; R17-6-408~~			~~Over 14' - 16' = F/R~~	

Route	Restriction Location (MP = Milepost)	Transport Subject to:	Height	Length	Width	Weight (in lbs)
Escort requirements: F = front escort, R = rear escort, F/R = front and rear escort, and LE = law enforcement escort						
State Route 587	MP 218.76 (Junction SR 87) to MP 225.30 (Junction I-10)	R17-6-402			Over 14' - 16' = F/R	
State Route 989	MP 34.01 (N. Rancho Vistoso Blvd/N. 1st Avenue) to MP 36.00 (Junction SR 77 at N. Oracle Road)	R17-6-402; R17-6-403; R17-6-404			Over 14' - 16' = F/R	
U.S. Highway 60	MP 31.20 (Junction I-10) to MP 49.52 (Junction SR 72)	~~R17-6-406; R17-6-408~~ R17-6-402			Over 14' - 16' = F/R	
U.S. Highway 60	MP 49.52 (Junction SR 72) to MP 85.91 (Junction SR 71)	~~R17-6-406; R17-6-408~~ R17-6-402			Over 14' - 16' = F/R	
U.S. Highway 60	MP 85.91 (Junction SR 71) to MP 107.7 (Vulture Mine Road)	~~R17-6-406; R17-6-408~~ R17-6-402			Over 14' - 16' = F/R	
U.S. Highway 60	MP 107.7 (Vulture Mine Road) to MP 110.24 (Washington Street)	~~R17-6-405; R17-6-406; R17-6-408; R17-6-409~~ R17-6-402; R17-6-403			Over 14' - 16' = F/R	
U.S. Highway 60	MP 110.24 Eastbound (Washington Street Underpass, Wickenburg - Structure 535)	~~R17-6-405; R17-6-406; R17-6-408; R17-6-409~~ R17-6-402; R17-6-403	~~13' 11"~~ 13' 10"		Over 14' - 16' = F/R	
U.S. Highway 60	MP 110.24 Westbound (Washington Street Underpass, Wickenburg - Structure 535)	~~R17-6-405; R17-6-406; R17-6-408; R17-6-409~~ R17-6-402; R17-6-403	~~13' 7"~~ 13' 9"		Over 14' - 16' = F/R	
U.S. Highway 60	MP 110.25 Eastbound (Railroad Underpass, Wickenburg - Structure 195)	~~R17-6-405; R17-6-406; R17-6-408; R17-6-409~~ R17-6-402; R17-6-403	~~13' 11'~~ 13' 10"		Over 14' - 16' = F/R	
U.S. Highway 60	MP 110.25 Westbound (Railroad Underpass, Wickenburg - Structure 195)	~~R17-6-405; R17-6-406; R17-6-408; R17-6-409~~ R17-6-402; R17-6-403	~~13' 7"~~ 13' 9"		Over 14' - 16' = F/R	
U.S. Highway 60	MP 110.26 Eastbound (Frontier Street Underpass, Wickenburg - Structure 1000)	~~R17-6-405; R17-6-406; R17-6-408; R17-6-409~~ R17-6-402; R17-6-403	~~13' 11"~~ 13' 10"		Over 14' - 16' = F/R	
U.S. Highway 60	MP 110.26 Westbound (Frontier Street Underpass, Wickenburg - Structure 1000)	~~R17-6-405; R17-6-406; R17-6-408; R17-6-409~~ R17-6-402; R17-6-403	~~13' 7"~~ 13' 9"		Over 14' - 16' = F/R	
U.S. Highway 60	MP 110.26 (Frontier Street) to MP 110.33 (Junction US 93)	~~R17-6-405; R17-6-406; R17-6-408; R17-6-409~~ R17-6-402; R17-6-403			Over 14' - 16' = F/R	
U.S. Highway 60	MP 110.33 (Junction US 93) to MP 138.48 (Junction SR 303 Loop)	~~R17-6-405; R17-6-406; R17-6-408; R17-6-409~~ R17-6-402; R17-6-403			Over 14' - 16' = F/R	
U.S. Highway 60	MP 138.48 (Junction SR 303 Loop) to MP 148.90 (Junction SR 101 Loop)	~~R17-6-405; R17-6-406; R17-6-408; R17-6-409~~ R17-6-402; R17-6-403			Over 14' - 16' = F/R	
U.S. Highway 60	MP 148.90 (Junction SR 101 Loop) to MP 160.10 (Junction I-17)	~~R17-6-405; R17-6-406; R17-6-408; R17-6-409~~ R17-6-402; R17-6-403; R17-6-404			Over 14' - 16' = F/R	
U.S. Highway 60	MP 172.00 (Junction I-10) to MP 172.90 (Hardy Drive)	~~R17-6-404; R17-6-405; R17-6-406; R17-6-408; R17-6-409~~ R17-6-402; R17-6-403; R17-6-404			Over 14' - 16' = R	
U.S. Highway 60	MP 172.90 Eastbound (Hardy Drive Underpass - Structure 1376)	~~R17-6-404; R17-6-405; R17-6-406; R17-6-408; R17-6-409~~ R17-6-402; R17-6-403; R17-6-404	~~15' 6"~~ 15' 7"		Over 14' - 16' = R	
U.S. Highway 60	MP 172.90 Westbound (Hardy Drive Underpass - Structure 1376)	~~R17-6-404; R17-6-405; R17-6-406; R17-6-408; R17-6-409~~ R17-6-402; R17-6-403; R17-6-404	15' 3"		Over 14' - 16' = R	

Route	Restriction Location (MP = Milepost)	Transport Subject to:	Height	Length	Width	Weight (in lbs)
Escort requirements: F = front escort, R = rear escort, F/R = front and rear escort, and LE = law enforcement escort						
U.S. Highway 60	MP 172.90 (Hardy Drive) to MP 174.41 (Rural Road TI)	~~R17-6-404; R17-6-405; R17-6-406; R17-6-408; R17-6-409~~ R17-6-402; R17-6-403; R17-6-404			Over 14' - 16' = R	
U.S. Highway 60	MP 174.41 Eastbound (Rural Road Underpass - Structure 1660)	~~R17-6-404; R17-6-405; R17-6-406; R17-6-408; R17-6-409~~ R17-6-402; R17-6-403; R17-6-404	15' 11"		Over 14' - 16' = R	
U.S. Highway 60	MP 174.41 (Rural Road TI) to MP 175.42 (McClintock Drive)	~~R17-6-404; R17-6-405; R17-6-406; R17-6-408; R17-6-409~~ R17-6-402; R17-6-403; R17-6-404			Over 14' - 16' = R	
U.S. Highway 60	MP 175.42 Eastbound (McClintock Drive Underpass - Structure 1661)	~~R17-6-404; R17-6-405; R17-6-406; R17-6-408; R17-6-409~~ R17-6-402; R17-6-403; R17-6-404	~~15' 10"~~ 15' 11"		Over 14' - 16' = R	
U.S. Highway 60	MP 175.42 Westbound (McClintock Drive Underpass - Structure 1661)	~~R17-6-404; R17-6-405; R17-6-406; R17-6-408; R17-6-409~~ R17-6-402; R17-6-403; R17-6-404	15' 11"		Over 14' - 16' = R	
U.S. Highway 60	MP 175.42 (McClintock Drive) to MP 176.29 (Junction SR 101 Loop)	~~R17-6-404; R17-6-405; R17-6-406; R17-6-408; R17-6-409~~ R17-6-402; R17-6-403; R17-6-404			Over 14' - 16' = R	
~~U.S. Highway 60~~	~~MP 176.29 (Junction SR 101) to MP 176.49 (SB 101 Over US 60)~~	~~R17-6-404; R17-6-405; R17-6-406; R17-6-408; R17-6-409~~			~~Over 14' - 16' = R~~	
~~U.S. Highway 60~~	~~MP 176.49 Eastbound (SB 101 Over US 60 - Structures 1792, 1791, & 2101)~~	~~R17-6-404; R17-6-405; R17-6-406; R17-6-408; R17-6-409~~	~~15' 8"~~		~~Over 14' - 16' = R~~	
~~U.S. Highway 60~~	~~MP 176.49 Westbound (SB 101 Over US 60 - Structures 1792, 1791, & 2101)~~	~~R17-6-404; R17-6-405; R17-6-406; R17-6-408; R17-6-409~~	~~15' 9"~~		~~Over 14' - 16' = R~~	
~~U.S. Highway 60~~	~~MP 176.49 (SB 101 Over US 60) to MP 177.45 (Dobson Road)~~	~~R17-6-404; R17-6-405; R17-6-406; R17-6-408; R17-6-409~~			~~Over 14' - 16' = R~~	
U.S. Highway 60	MP 176.29 (Junction SR 101 Loop) to MP 177.45 (Dobson Road TI)	R17-6-402; R17-6-403; R17-6-404			Over 14' - 16' = R	
U.S. Highway 60	MP 177.45 (Dobson Road Underpass - Structure 1795)	~~R17-6-404; R17-6-405; R17-6-406; R17-6-408; R17-6-409~~ R17-6-402; R17-6-403; R17-6-404	15' 9"		Over 14' - 16' = R	
U.S. Highway 60	MP 177.45 (Dobson Road TI) to MP 184.39 (Val Vista Drive TI)	~~R17-6-404; R17-6-405; R17-6-406; R17-6-408; R17-6-409~~ R17-6-402; R17-6-403; R17-6-404			Over 14' - 16' = R	
U.S. Highway 60	MP 184.39 (Val Vista Drive Underpass - Structure 1883)	~~R17-6-404; R17-6-405; R17-6-406; R17-6-408; R17-6-409~~ R17-6-402; R17-6-403; R17-6-404	15' 10"		Over 14' - 16' = R	
U.S. Highway 60	MP 184.39 (Val Vista Drive TI) to MP 184.77 (39th Street)	~~R17-6-404; R17-6-405; R17-6-406; R17-6-408; R17-6-409~~ R17-6-402; R17-6-403; R17-6-404			Over 14' - 16' = R	
U.S. Highway 60	MP 184.77 (39th Street Underpass - Structure 1918)	~~R17-6-404; R17-6-405; R17-6-406; R17-6-408; R17-6-409~~ R17-6-402; R17-6-403; R17-6-404	15' 11"		Over 14' - 16' = R	
U.S. Highway 60	MP 184.77 (39th Street) to MP 188.38 (Power Road)	~~R17-6-404; R17-6-405; R17-6-406; R17-6-408; R17-6-409~~ R17-6-402; R17-6-403; R17-6-404			Over 14' - 16' = R	

Route	Restriction Location (MP = Milepost)	Transport Subject to:	Height	Length	Width	Weight (in lbs)
Escort requirements: F = front escort, R = rear escort, F/R = front and rear escort, and LE = law enforcement escort						
U.S. Highway 60	MP 188.38 (Power Road Underpass - Structure 1924)	~~R17-6-404; R17-6-405; R17-6-406; R17-6-408; R17-6-409~~ R17-6-402; R17-6-403; R17-6-404	15’ 9”		Over 14’ - 16’ = R	
U.S. Highway 60	MP 188.38 (Power Road) to MP 190.51 (Junction SR 202 Loop)	~~R17-6-404; R17-6-405; R17-6-406; R17-6-408; R17-6-409~~ R17-6-402; R17-6-403; R17-6-404			Over 14’ - 16’ = R	
~~U.S. Highway 60~~	~~MP 190.51 (Junction SR 202) to MP 194.38 (Meridian Road)~~	~~R17-6-405; R17-6-406; R17-6-408; R17-6-409~~			~~Over 14’ - 16’ = R~~	
~~U.S. Highway 60~~	~~MP 194.38 (Meridian Road Underpass - Structure 1438)~~	~~R17-6-405; R17-6-406; R17-6-408; R17-6-409~~	~~15’ 9”~~		~~Over 14’ - 16’ = R~~	
~~U.S. Highway 60~~	~~MP 194.38 (Meridian Road) to MP 196.14 (Junction SR 88, Idaho Road)~~	~~R17-6-405; R17-6-406; R17-6-408; R17-6-409~~			~~Over 14’ - 16’ = R~~	
U.S. Highway 60	MP 190.51 (Junction SR 202 Loop) to MP 196.14 (Junction SR 88, Idaho Road)	R17-6-402; R17-6-403			Over 14’ - 16’ = R	
U.S. Highway 60	MP 196.14 (Junction SR 88, Idaho Road) to MP 212.17 (Junction SR 79)	~~R17-6-405; R17-6-406; R17-6-408; R17-6-409~~ R17-6-402; R17-6-403			Over 14’ - 16’ = F/R	
U.S. Highway 60	MP 212.17 (Junction SR 79) to MP 226.87 (Junction SR 177)	~~R17-6-405; R17-6-406; R17-6-407; R17-6-408; R17-6-409~~ R17-6-402; R17-6-403; R17-6-407			Over 14’ - 16’ = F/R	
U.S. Highway 60	MP 226.87 (Junction SR 177) to MP 227.71 (Queen Creek Bridge)	~~R17-6-406; R17-6-407; R17-6-408~~ R17-6-402; R17-6-407		80’+ ~~unarticulated~~ non-articulated requires F/R; 110’+ articulated requires F/R	Over 10’ - 14’ = F/R Over 14’ - 16’ = F/R + 2 LE	

Route	Restriction Location (MP = Milepost)	Transport Subject to:	Height	Length	Width	Weight (in lbs)
Escort requirements: F = front escort, R = rear escort, F/R = front and rear escort, and LE = law enforcement escort						
U.S. Highway 60	MP 227.71 (Queen Creek Bridge - Structure 406)	~~R17-6-406; R17-6-407; R17-6-408~~ R17-6-402; R17-6-407		80'+ ~~unarticulated~~ non-articulated requires F/R; 110'+ articulated requires F/R	Over 10' - 14' = F/R Over 14' - 16' = F/R + 2 LE	~~Class A permitted vehicles with a gross weight of:~~ ~~100,000 or less - no additional restrictions;~~ ~~100,001 through 150,000 - drivers shall:~~ ~~Coordinate road closures by or under the direction of law enforcement; and~~ ~~Cross on center of bridge at a constant speed of no more than 10 mph while on bridge.~~ ~~Class C permits and special analysis and approval from the ADOT Bridge Group are required for vehicles with a gross weight of 150,001 or more.~~ Class A permitted vehicles with a gross weight of: 100,000 or less - no additional restrictions; 100,001 through 150,000 - drivers shall: Coordinate road closures by or under the direction of 2 law enforcement escorts; and Cross on center of bridge at a constant speed of no more than 10 mph while on bridge. 150,001 or more requires a Class C permit with special analysis and approval from the ADOT Bridge Group.
U.S. Highway 60	MP 227.71 (Queen Creek Bridge) to MP 228.47 (Queen Creek Tunnel)	~~R17-6-406; R17-6-407; R17-6-408~~ R17-6-402; R17-6-407		80'+ ~~unarticulated~~ non-articulated requires F/R; 110'+ articulated requires F/R	Over 11' - 14' = F/R Over 14' - 16' = F/R + 2 LE	
U.S. Highway 60	MP 228.47 (Queen Creek Tunnel - Structure 407)	~~R17-6-406; R17-6-407; R17-6-408;~~ R17-6-402; R17-6-407 ~~* Loads 14' to 20' in height require F/R + 2 LE and shall drive in center of tunnel~~	14' *	80'+ ~~unarticulated~~ non-articulated requires F/R; 110'+ articulated requires F/R	Over 11' - 14' = F/R Over 14' - 16' = F/R + 2 LE	* Over 14' to 16' in height requires F/R + 2 LE: Coordinate road closures by or under the direction of law enforcement escorts; and Drive in center of tunnel.
U.S. Highway 60	MP 228.47 (Queen Creek Tunnel) to MP 238.25 (Pinto Creek Bridge)	~~R17-6-406; R17-6-407; R17-6-408~~ R17-6-402; R17-6-407		80'+ ~~unarticulated~~ non-articulated requires F/R; 110'+ articulated requires F/R	Over 11' - 14' = F/R Over 14' - 16' = F/R + 2 LE	

Route	Restriction Location (MP = Milepost)	Transport Subject to:	Height	Length	Width	Weight (in lbs)
Escort requirements: F = front escort, R = rear escort, F/R = front and rear escort, and LE = law enforcement escort						
U.S. Highway 60	MP 238.25 (Pinto Creek Bridge - Structure 351)	~~R17-6-406; R17-6-407; R17-6-408~~ R17-6-402; R17-6-407		80'+ ~~unarticulated~~ non-articulated requires F/R; 110'+ articulated requires F/R	Over 11' - 14' = F/R Over 14' - 16' = F/R + 2 LE	~~Class A permitted vehicles with a gross weight of:~~ ~~100,000 or less - no additional restrictions;~~ ~~100,001 through 150,000 - drivers shall:~~ ~~Coordinate road closures by or under the direction of law enforcement; and~~ ~~Cross on center of bridge at a constant speed of no more than 10 mph while on bridge.~~ ~~Class C permits and special analysis and approval from the ADOT Bridge Group are required for vehicles with a gross weight of 150,001 or more.~~ Class A permitted vehicles with a gross weight of: 100,000 or less - no additional restrictions; 100,001 through 150,000 - drivers shall: Coordinate road closures by or under the direction of 2 law enforcement escorts; and Cross on center of bridge at a constant speed of no more than 10 mph while on bridge. 150,001 or more requires a Class C permit with special analysis and approval from the ADOT Bridge Group.
U.S. Highway 60	MP 238.25 (Pinto Creek Bridge) to MP 247.04 (Junction SR 188)	~~R17-6-406; R17-6-407; R17-6-408~~ R17-6-402; R17-6-407		80'+ ~~unarticulated~~ non-articulated requires F/R; 110'+ articulated requires F/R	Over 11' - 14' = F/R Over 14' - 16' = F/R + 2 LE	
U.S. Highway 60	MP 247.04 (Junction SR 188) to MP 252.06 (Junction US 70)	~~R17-6-406; R17-6-407; R17-6-408~~ R17-6-402; R17-6-407		80'+ ~~unarticulated~~ non-articulated requires F/R; 110'+ articulated requires F/R	Over 11' - 14' = F/R Over 14' - 16' = F/R ~~+ 2 LE~~	
U.S. Highway 60	MP 252.06 (Junction US 70) to MP 292.91 (Apache Bridge)	~~R17-6-406; R17-6-408~~ R17-6-402		80'+ ~~unarticulated~~ non-articulated requires F/R; 110'+ articulated requires F/R	Over 12' - 14' = F/R Over 14' Prohibited	

Route	Restriction Location (MP = Milepost)	Transport Subject to:	Height	Length	Width	Weight (in lbs)
Escort requirements: F = front escort, R = rear escort, F/R = front and rear escort, and LE = law enforcement escort						
U.S. Highway 60	MP 292.91 (Apache Bridge - Structure 1929)	~~R17-6-406; R17-6-408~~ R17-6-402		80'+ ~~unarticulated~~ non-articulated requires F/R; 110'+ articulated requires F/R	Over 12' - 14' = F/R ~~+ 2 LE~~ Over 14' Prohibited	Class A permitted vehicles with a gross weight of: 150,000 or less - no additional restrictions; 150,001 through 250,000 - drivers shall: Coordinate road closures by or under the direction of 2 law enforcement escorts; and Cross on center of bridge at a constant speed of no more than 10 mph while on bridge. ~~Class C permitted vehicles with a gross weight of over 250,000 require special analysis and approval from the ADOT Bridge Group.~~ Class C permitted vehicles with a gross weight of: 250,001 or more require special analysis and approval from the ADOT Bridge Group.
U.S. Highway 60	MP 292.91 (Apache Bridge) to MP 318.14 (Junction SR 73)	~~R17-6-406; R17-6-408~~ R17-6-402		80'+ ~~unarticulated~~ non-articulated requires F/R; 110'+ articulated requires F/R	Over 12' - 14' = F/R Over 14' Prohibited	
U.S. Highway 60	MP 318.14 (Junction SR 73) to MP 323.44 (Cedar Canyon Bridge)	~~R17-6-406; R17-6-408~~ R17-6-402		80'+ ~~unarticulated~~ non-articulated requires F/R; 110'+ articulated requires F/R	Over 12' - 14' = F/R Over 14' - 16' = F/R + 2 LE	

Route	Restriction Location (MP = Milepost)	Transport Subject to:	Height	Length	Width	Weight (in lbs)
Escort requirements: F = front escort, R = rear escort, F/R = front and rear escort, and LE = law enforcement escort						
U.S. Highway 60	MP 323.44 (Cedar Canyon Bridge - Structure 215)	~~R17-6-406; R17-6-408~~ R17-6-402		80'+ ~~unarticulated~~ non-articulated requires F/R; 110'+ articulated requires F/R	Over 12' - 14' = F/R Over 14' - 16' = F/R + 2 LE	~~Class A permitted vehicles with a gross weight of: 100,000 or less - no additional restrictions; 100,001 through 150,000 - drivers shall: Coordinate road closures by or under the direction of law enforcement; and Cross on center of bridge at a constant speed of no more than 10 mph while on bridge. Class C permits and special analysis and approval from the ADOT Bridge Group are required for vehicles with a gross weight of 150,001 or more.~~ Class A permitted vehicles with a gross weight of: 100,000 or less - no additional restrictions; 100,001 through 150,000 - drivers shall: Coordinate road closures by or under the direction of 2 law enforcement escorts; and Cross on center of bridge at a constant speed of no more than 10 mph while on bridge. 150,001 or more requires a Class C permit with special analysis and approval from the ADOT Bridge Group.
~~U.S. Highway 60~~	~~MP 323.44 (Cedar Canyon Bridge) to MP 339.71 (Junction SR 260)~~	~~R17-6-406; R17-6-408~~		~~80'+ unarticulated requires F/R; 110'+ articulated requires F/R~~	~~Over 12' - 14' = F/R Over 14' - 16' = F/R + 2 LE~~	
U.S. Highway 60	MP 323.44 (Cedar Canyon Bridge) to MP 338.86 (Summit Trail)	R17-6-402		80'+ non-articulated requires F/R; 110'+ articulated requires F/R	Over 12' - 14' = F/R Over 14' - 16' = F/R + 2 LE	
U.S. Highway 60	MP 338.86 (Summit Trail) to MP 339.71 (Junction SR 260)	R17-6-402		80'+ non-articulated requires F/R; 110'+ articulated requires F/R	Over 12' - 16' = F/R	
U.S. Highway 60	MP 339.71 (Junction SR 260) to MP 341.69 (Junction SR 260)	~~R17-6-406; R17-6-408~~ R17-6-402			Over 12' - 16' = F/R	
U.S. Highway 60	MP 341.69 (Junction SR 260) to MP 342.77 (Junction SR 77)	~~R17-6-406; R17-6-408~~ R17-6-402			Over 12' - 16' = F/R	
U.S. Highway 60	MP 342.77 (Junction SR 77) to MP 353.16 (Junction SR 61)	~~R17-6-406; R17-6-408~~ R17-6-402			Over 12' - 16' = F/R	
~~U.S. Highway 60~~	~~MP 353.16 (Junction SR 61) to MP 384.45 (Junction US 180)~~	~~R17-6-406; R17-6-408~~			~~Over 12' - 16' = F/R~~	

Route	Restriction Location (MP = Milepost)	Transport Subject to:	Height	Length	Width	Weight (in lbs)
Escort requirements: F = front escort, R = rear escort, F/R = front and rear escort, and LE = law enforcement escort						
U.S. Highway 60	MP 353.16 (Junction SR 61) to MP 371.74 (Mallory Draw)	R17-6-402			Over 12' - 16' = F/R	
U.S. Highway 60	MP 371.74 (Mallory Draw Bridge - Structure 2605)	R17-6-402			Over 12' - 16' = F/R	Class A permitted vehicles with a gross weight of: 150,000 or less - no additional restrictions; 150,001 through 250,000 - drivers shall: Coordinate road closures by or under the direction of 2 law enforcement escorts; and Cross on center of bridge at a constant speed of no more than 10 mph while on bridge. Class C permitted vehicles with a gross weight of: 250,001 or more require special analysis and approval from the ADOT Bridge Group.
U.S. Highway 60	MP 371.74 (Mallory Draw) to MP 384.45 (Junction US 180)	R17-6-402			Over 12' - 16' = F/R	
U.S. Highway 60	MP 384.45 (Junction US 180) to MP 401.97 (New Mexico State Line)	~~R17-6-406; R17-6-408~~ R17-6-402			Over 12' - 16' = F/R	
U.S. Highway 64	MP 465.40 (Junction US 160) to MP 469.54 (New Mexico State Line)	~~R17-6-406; R17-6-408~~ R17-6-402			Over 14' - 16' = F/R	
U.S. Highway 70	MP 252.14 (Junction US 60) to MP 253.63 (Railroad Underpass)	~~R17-6-406; R17-6-408~~ R17-6-402			Over 14' - 16' = F/R	
U.S. Highway 70	MP 253.63 (Railroad Underpass - Structure 562)	~~R17-6-406; R17-6-408~~ R17-6-402	15' 6"		Over 14' - 16' = F/R	
U.S. Highway 70	MP 253.63 (Railroad Underpass) to MP 254.11 (Junction SR 77)	~~R17-6-406; R17-6-408~~ R17-6-402			Over 14' - 16' = F/R	
U.S. Highway 70	MP 254.11 (Junction SR 77) to MP 339.45 (Junction US 191)	~~R17-6-406; R17-6-408~~ R17-6-402			Over 14' - 16' = F/R	
U.S. Highway 70	MP 339.45 (Junction US 191) to MP 349.48 (Junction US 191)	~~R17-6-406; R17-6-408~~ R17-6-402			Over 14' - 16' = F/R	
U.S. Highway 70	MP 349.48 (Junction US 191) to MP 378.90 (Junction SR 75)	~~R17-6-406; R17-6-408~~ R17-6-402			Over 14' - 16' = F/R	
U.S. Highway 70	MP 378.90 (Junction SR 75) to MP 385.25 (New Mexico State Line)	~~R17-6-406; R17-6-408~~ R17-6-402			Over 14' - 16' = F/R	
~~U.S. Highway 89~~	~~MP 401.00 (Junction I-40) to MP 403.18 (Junction SB 40)~~	~~R17-6-406; R17-6-408~~			~~Over 14' - 16' = F/R~~	
~~U.S. Highway 89~~	~~MP 418.59 (Junction SB 40) to MP 465.21 (Junction SR 64)~~	~~R17-6-406; R17-6-408~~			~~Over 14' - 16' = F/R~~	
U.S. Highway 89	MP 401.00 (Junction I-40) to MP 420.38 (Junction SB 40)	R17-6-402			Local Requirements	City of Flagstaff Jurisdiction
U.S. Highway 89	MP 420.38 (Junction SB 40) to MP 465.21 (Junction SR 64)	R17-6-402			Over 14' - 16' = F/R	
~~U.S. Highway 89~~	~~MP 465.21 (Junction SR 64) to MP 466.88 (Cameron Bridge)~~	~~R17-6-406; R17-6-408~~			~~Over 14' - 16' = F/R~~	

Route	Restriction Location (MP = Milepost)	Transport Subject to:	Height	Length	Width	Weight (in lbs)
Escort requirements: F = front escort, R = rear escort, F/R = front and rear escort, and LE = law enforcement escort						
~~U.S. Highway 89~~	~~MP 466.88 (Cameron Bridge - Structure 532)~~	~~R17-6-406; R17-6-408~~			~~Over 14' - 16' = F/R + 2 LE~~	~~Class A permitted vehicles with a gross weight of: 100,000 or less - no additional restrictions; 100,001 through 150,000 - drivers shall: Coordinate road closures by or under the direction of law enforcement; and Cross on center of bridge at a constant speed of no more than 10 mph while on bridge. Class C permits and special analysis and approval from the ADOT Bridge Group are required for vehicles with a gross weight of 150,001 or more.~~
~~U.S. Highway 89~~	~~MP 466.88 (Cameron Bridge) to MP 480.80 (Junction US 160)~~	~~R17-6-406; R17-6-408~~			~~Over 14' - 16' = F/R~~	
U.S. Highway 89	MP 465.21 (Junction SR 64) to MP 480.80 (Junction US 160)	R17-6-402			Over 14' - 16' = F/R	
U.S. Highway 89	MP 480.80 (Junction US 160) to MP 524.01 (Junction US 89A)	~~R17-6-406; R17-6-408~~ R17-6-402			Over 14' - 16' = F/R	
U.S. Highway 89	MP 524.01 (Junction US 89A) to MP 546.20 (Junction SR 98)	~~R17-6-406; R17-6-408~~ R17-6-402			Over 14' - 16' = F/R	
U.S. Highway 89	MP 546.20 (Junction SR 98) to MP 549.54 (Glen Canyon Bridge)	~~R17-6-406; R17-6-408~~ R17-6-402			Over 14' - 16' = F/R	
U.S. Highway 89	MP 549.54 (Glen Canyon Bridge - Structure 537)	~~R17-6-406; R17-6-408~~ R17-6-402			Over 14' - 16' = F/R ~~+ 2 LE~~	Class A permitted vehicles with a gross weight of: 150,000 or less - no additional restrictions; 150,001 through 250,000 - drivers shall: Coordinate road closures by or under the direction of 2 law enforcement escorts; and Cross on center of bridge at a constant speed of no more than 10 mph while on bridge. ~~Class C permitted vehicles with a gross weight of over 250,000 require special analysis and approval from the ADOT Bridge Group.~~ Class C permitted vehicles with a gross weight of: 250,001 or more require special analysis and approval from the ADOT Bridge Group.
U.S. Highway 89	MP 549.54 (Glen Canyon Bridge) to MP 556.99 (Utah State Line)	~~R17-6-406; R17-6-408~~ R17-6-402			Over 14' - 16' = F/R	
U.S. Highway 89A	MP 524.07 (Junction US 89) to MP 537.86 (Navajo Bridge at Colorado River)	~~R17-6-406; R17-6-408~~ R17-6-402			Over 10' - 14' = F/R Over 14' - 16' = F/R + 2 LE	

Route	Restriction Location (MP = Milepost)	Transport Subject to:	Height	Length	Width	Weight (in lbs)
Escort requirements: F = front escort, R = rear escort, F/R = front and rear escort, and LE = law enforcement escort						
U.S. Highway 89A	MP 537.86 (Navajo Bridge at Colorado River - Structure 2340)	~~R17-6-406; R17-6-408~~ R17-6-402			Over 10' - 14' = F/R Over 14' - 16' = F/R + 2 LE	Class A permitted vehicles with a gross weight of: 150,000 or less - no additional restrictions; 150,001 through 250,000 - drivers shall: Coordinate road closures by or under the direction of 2 law enforcement escorts; and Cross on center of bridge at a constant speed of no more than 10 mph while on bridge. ~~Class C permitted vehicles with a gross weight of over 250,000 require special analysis and approval from the ADOT Bridge Group.~~ Class C permitted vehicles with a gross weight of: 250,001 or more require special analysis and approval from the ADOT Bridge Group.
U.S. Highway 89A	MP 537.86 (Navajo Bridge at Colorado River) to MP 547.00 (~~Cliffdweller's~~ Cliff Dweller's Lodge)	~~R17-6-406; R17-6-408~~ R17-6-402			Over 10' - 14' = F/R Over 14' - 16' = F/R + 2 LE	
U.S. Highway 89A	MP 547.00 (~~Cliffdweller's~~ Cliff Dweller's Lodge) to MP 579.30 (Junction SR 67)	~~R17-6-406; R17-6-408~~ R17-6-402			Over 8' 6" requires class C permit	
U.S. Highway 89A	MP 579.30 (Junction SR 67) to MP 609.23 (Junction SR 389)	~~R17-6-406; R17-6-408~~ R17-6-402			Over 12' - 16' = F/R	
U.S. Highway 89A	MP 609.23 (Junction SR 389) to MP 613.03 (Utah State Line)	~~R17-6-406; R17-6-408~~ R17-6-402			Over 12' - 16' = F/R	
U.S. Highway 93	MP 0.00 (Hoover Dam Bypass) to MP 67.20 (Junction SR 68)	~~R17-6-405; R17-6-406; R17-6-408; R17-6-409~~ R17-6-402; R17-6-403			Over 14' - 16' = F/R	Nevada issues permit for Mike O'Callaghan – Pat Tillman Memorial Bridge (Colorado River Bridge).
U.S. Highway 93	MP 67.20 (Junction SR 68) to MP 71.10 (Junction I-40, Exit # 48)	~~R17-6-405; R17-6-406; R17-6-408; R17-6-409~~ R17-6-402; R17-6-403			Over 14' - 16' = F/R	
U.S. Highway 93	MP 91.38 (Junction I-40, Exit # 71) to MP 139.07 Southbound (Burro Creek Bridge)	~~R17-6-406; R17-6-407; R17-6-408~~ R17-6-402; R17-6-407			Over 14' - 16' = F/R + 2 LE	

Route	Restriction Location (MP = Milepost)	Transport Subject to:	Height	Length	Width	Weight (in lbs)
Escort requirements: F = front escort, R = rear escort, F/R = front and rear escort, and LE = law enforcement escort						
U.S. Highway 93	MP 139.07 Southbound (Burro Creek Bridge - Structure 846)	~~R17-6-406; R17-6-407; R17-6-408~~ R17-6-402; R17-6-407			Over 14' - 16' = F/R + 2 LE	Class A permitted vehicles with a gross weight of: 150,000 or less - no additional restrictions; 150,001 through 250,000 - drivers shall: Coordinate road closures by or under the direction of 2 law enforcement escorts; and Cross on center of bridge at a constant speed of no more than 10 mph while on bridge. ~~Class C permitted vehicles with a gross weight of over 250,000 require special analysis and approval from the ADOT Bridge Group.~~ Class C permitted vehicles with a gross weight of: 250,001 or more require special analysis and approval from the ADOT Bridge Group.
U.S. Highway 93	MP 139.07 Southbound (Burro Creek Bridge) to MP 154.85 (Junction SR 97)	~~R17-6-406; R17-6-407; R17-6-408~~ R17-6-402; R17-6-407			Over 14' - 16' = F/R + 2 LE	
U.S. Highway 93	MP 154.85 (Junction SR 97) to MP 182.90 (Junction SR 71)	~~R17-6-406; R17-6-407; R17-6-408~~ R17-6-402; R17-6-407			Over 14' - 16' = F/R + 2 LE	
U.S. Highway 93	MP 182.90 (Junction SR 71) to MP 193.61 (Junction SR 89)	~~R17-6-406; R17-6-407; R17-6-408~~ R17-6-402; R17-6-407			Over 14' - 16' = F/R + 2 LE	
U.S. Highway 93	MP 193.61 (Junction SR 89) to MP 199.67 (Junction US 60 in Wickenburg)	~~R17-6-406; R17-6-407; R17-6-408~~ R17-6-402; R17-6-407			Over 14' - 16' = F/R ~~+ 2 LE~~	
~~U.S. Highway 95~~	~~MP 0.00 (US/Mexico Border) to MP 19.84 (32nd Street East)~~	~~R17-6-406; R17-6-408~~			~~Over 14' - 16' = F/R~~	
~~U.S. Highway 95~~	~~MP 19.84 (32nd Street East) to MP 24.35 (Junction I-8)~~	~~R17-6-404; R17-6-405; R17-6-406; R17-6-408; R17-6-409~~			~~Over 14' - 16' = F/R~~	
~~U.S. Highway 95~~	~~MP 24.35 (Junction I-8) to MP 31.87 (Avenue 9E)~~	~~R17-6-404; R17-6-405; R17-6-406; R17-6-408; R17-6-409~~			~~Over 14' - 16' = F/R~~	
~~U.S. Highway 95~~	~~MP 31.87 (Avenue 9E) to MP 104.25 (Junction I-10)~~	~~R17-6-406; R17-6-408~~			~~Over 14' - 16' = F/R~~	
U.S. Highway 95	MP 29.34 (Araby Road) to MP 104.25 (Junction I-10)	R17-6-402			Over 14' - 16' = F/R	
U.S. Highway 95	MP 104.25 (Junction I-10) to MP 104.51 (~~SB 10~~ Main Street in Quartzsite)	~~R17-6-406; R17-6-408~~ R17-6-402			Over 14' - 16' = F/R	
U.S. Highway 160	MP 311.46 (Junction US 89) to MP 321.86 (Junction SR 264)	~~R17-6-406; R17-6-408~~ R17-6-402			Over 14' - 16' = F/R	
U.S. Highway 160	MP 321.86 (Junction SR 264) to MP 361.61 (Junction SR 98)	~~R17-6-406; R17-6-408~~ R17-6-402			Over 14' - 16' = F/R	
U.S. Highway 160	MP 361.61 (Junction SR 98) to MP 374.28 (Junction SR 564)	~~R17-6-406; R17-6-408~~ R17-6-402			Over 14' - 16' = F/R	
U.S. Highway 160	MP 374.28 (Junction SR 564) to MP 393.57 (Junction US 163)	~~R17-6-406; R17-6-408~~ R17-6-402			Over 14' - 16' = F/R	

Route	Restriction Location (MP = Milepost)	Transport Subject to:	Height	Length	Width	Weight (in lbs)
Escort requirements: F = front escort, R = rear escort, F/R = front and rear escort, and LE = law enforcement escort						
U.S. Highway 160	MP 393.57 (Junction US 163) to MP 434.87 (Junction US 191)	~~R17-6-406; R17-6-408~~ R17-6-402			Over 14' - 16' = F/R	
U.S. Highway 160	MP 434.87 (Junction US 191) to MP 437.22 (Junction US 191; BIA 12)	~~R17-6-406; R17-6-408~~ R17-6-402			Over 14' - 16' = F/R	
U.S. Highway 160	MP 437.22 (Junction US 191; BIA 12) to MP 465.40 (Junction US 64)	~~R17-6-406; R17-6-408~~ R17-6-402			Over 14' - 16' = F/R	
U.S. Highway 160	MP 465.40 (Junction US 64) to MP 470.73 (New Mexico State Line)	~~R17-6-406; R17-6-408~~ R17-6-402			Over 14' - 16' = F/R	
U.S. Highway 163	MP 393.52 (Junction US 160) to MP 396.16 (Laguna Wash Bridge)	~~R17-6-406; R17-6-408~~ R17-6-402			Over 12' - 16' = F/R	
U.S. Highway 163	MP 396.16 (Laguna Wash Bridge - Structure 25)	~~R17-6-406; R17-6-408~~ R17-6-402			Over 12' - 16' = F/R ~~+ 2 LE~~	~~Class A permitted vehicles with a gross weight of:~~ ~~100,000 or less - no additional restrictions;~~ ~~100,001 through 150,000 - drivers shall:~~ ~~Coordinate road closures by or under the direction of law enforcement; and~~ ~~Cross on center of bridge at a constant speed of no more than 10 mph while on bridge.~~ ~~Class C permits and special analysis and approval from the ADOT Bridge Group are required for vehicles with a gross weight of 150,001 or more.~~ Class A permitted vehicles with a gross weight of: 100,000 or less - no additional restrictions; 100,001 through 150,000 - drivers shall: Coordinate road closures by or under the direction of 2 law enforcement escorts; and Cross on center of bridge at a constant speed of no more than 10 mph while on bridge. 150,001 or more requires a Class C permit with special analysis and approval from the ADOT Bridge Group.
U.S. Highway 163	MP 396.16 (Laguna Wash Bridge) to MP 416.71 (Utah State Line)	~~R17-6-406; R17-6-408~~ R17-6-402			Over 12' - 16' = F/R	
U.S. Highway 180	MP 215.44 (Junction SB 40) to MP 265.82 (Junction SR 64)	~~R17-6-406; R17-6-408~~ R17-6-402			Over 12' - 16' = F/R	
U.S. Highway 180	MP 307.30 (Junction SR 77) to MP 343.13 (Junction SR 180A)	~~R17-6-406; R17-6-408~~ R17-6-402			Over 12' - 16' = F/R	
U.S. Highway 180	MP 343.13 (Junction SR 180A) to MP 358.44 (Junction SR 61)	~~R17-6-406; R17-6-408~~ R17-6-402			Over 12' - 16' = F/R	
U.S. Highway 180	MP 358.44 (Junction SR 61) to MP 368.92 (Junction US 191)	~~R17-6-406; R17-6-408~~ R17-6-402			Over 12' - 16' = F/R	

Route	Restriction Location (MP = Milepost)	Transport Subject to:	Height	Length	Width	Weight (in lbs)
Escort requirements: F = front escort, R = rear escort, F/R = front and rear escort, and LE = law enforcement escort						
U.S. Highway 180	MP 368.92 (Junction US 191) to MP 394.36 (Junction US 60)	~~R17-6-406; R17-6-408~~ R17-6-402			Over 12’ - 16’ = F/R	
U.S. Highway 180	MP 400.61 (Junction US 60) to MP 426.33 (Junction US 191)	~~R17-6-406; R17-6-408~~ R17-6-402			Over 12’ - 16’ = F/R	
U.S. Highway 180	MP 426.33 (Junction US 191) to MP 433.26 (New Mexico State Line)	~~R17-6-406; R17-6-408~~ R17-6-402			Over 12’ - 16’ = F/R	
~~U.S. Highway 191~~	~~MP 0.00 (Junction SR 80) to MP 38.12 (Junction SR 181)~~	~~R17-6-406; R17-6-408~~			~~Over 14’ - 16’ = F/R~~	
U.S. Business 191	MP 0.00 (US/Mexico Border) to MP 1.15 (Junction SR 80, Douglas)	R17-6-402			Over 14’ - 16’ = F/R	
U.S. Highway 191	MP 1.15 (Junction SR 80, Douglas) to MP 38.12 (Junction SR 181)	R17-6-402			Over 14’ - 16’ = F/R	
U.S. Highway 191	MP 38.12 (Junction SR 181) to MP 66.55 (Junction I-10)	~~R17-6-406; R17-6-408~~ R17-6-402			Over 14’ - 16’ = F/R	
U.S. Highway 191	MP 87.43 (Junction I-10) to MP 104.38 (Junction SR 266)	~~R17-6-406; R17-6-408~~ R17-6-402			Over 14’ - 16’ = F/R	
U.S. Highway 191	MP 104.38 (Junction SR 266) to MP 113.69 (Junction SR 366)	~~R17-6-406; R17-6-408~~ R17-6-402			Over 14’ - 16’ = F/R	
U.S. Highway 191	MP 113.69 (Junction SR 366) to MP 121.02 (Junction US 70)	~~R17-6-406; R17-6-408~~ R17-6-402			Over 14’ - 16’ = F/R	
U.S. Highway 191	MP 130.60 (Junction US 70) to MP 154.90 Southbound (Cold Creek Bridge)	~~R17-6-406; R17-6-408~~ R17-6-402			Over 14’ - 16’ = F/R	
U.S. Highway 191	MP 154.90 Southbound (Cold Creek Bridge - Structure 258)	~~R17-6-406; R17-6-408~~ R17-6-402			Over 14’ - 16’ = F/R	
U.S. Highway 191	MP 154.90 Southbound (Cold Creek Bridge) to MP 163.95 (Temporary US 191, Clifton)	~~R17-6-406; R17-6-408~~ R17-6-402			Over 14’ - 16’ = F/R	
U.S. Highway 191	MP 179.36 (Junction at end of Temporary US 191) to MP 215.41 (Forest Service Route 25)	~~R17-6-406; R17-6-408~~ R17-6-402		Over 40’ requires class C permit	Over 8’ 6” requires class C permit	
U.S. Highway 191	MP 215.41 (Forest Service Route 25) to MP 253.74 (Junction US 180, Alpine)	~~R17-6-406; R17-6-408~~ R17-6-402			Over 8’ 6” requires class C permit	
U.S. Highway 191	MP 315.55 (Junction US 180 in St Johns) to MP 344.49 (Junction SR 61)	~~R17-6-406; R17-6-408~~ R17-6-402			Over 14’ - 16’ = F/R	
~~U.S. Highway 191~~	~~MP 344.49 (Junction SR 61) to MP 368.47 (Railroad Overpass, Sanders)~~	~~R17-6-406; R17-6-408~~			~~Over 14’ - 16’ = F/R~~	
~~U.S. Highway 191~~	~~MP 368.47 (Railroad Overpass, Sanders - Structure 346)~~	~~R17-6-406; R17-6-408~~			~~Over 14’ - 16’ = F/R~~	~~Legal weight as provided under R17-6-102, Table 1.~~
~~U.S. Highway 191~~	~~MP 368.47 (Railroad Overpass, Sanders) to MP 368.50 (Junction I-40 in Sanders)~~	~~R17-6-406; R17-6-408~~			~~Over 14’ - 16’ = F/R~~	
U.S. Highway 191	MP 344.49 (Junction SR 61) to MP 368.50 (Junction I-40 in Sanders)	R17-6-402			Over 14’ - 16’ = F/R	
U.S. Highway 191	MP 374.00 (Junction I-40) to MP 411.63 (Junction SR 264, Ganado)	~~R17-6-406; R17-6-408~~ R17-6-402			Over 12’ - 16’ = F/R	

Route	Restriction Location (MP = Milepost)	Transport Subject to:	Height	Length	Width	Weight (in lbs)
Escort requirements: F = front escort, R = rear escort, F/R = front and rear escort, and LE = law enforcement escort						
U.S. Highway 191	MP 417.55 (Junction SR 264) to MP 510.34 (Junction US 160)	~~R17-6-406; R17-6-408~~ R17-6-402			Over 12' - 16' = F/R	
~~U.S. Highway 191 Temp (UX 191)~~	~~MP 163.95 (Temporary US 191, Clifton) to MP 169.00 (Phelps Dodge Mine entrance)~~	~~R17-6-406; R17-6-408~~			~~Over 8' requires class C permit~~	
~~U.S. Highway 191 Temp (UX 191)~~	~~MP 169.00 (Phelps Dodge Mine entrance) to MP 169.20 (Phelps Dodge Viaduct)~~	~~R17-6-406; R17-6-408~~			~~Over 8' requires class C permit~~	
U.S. Highway 191 Temp (UX 191)	MP 163.95 (Temporary US 191, Clifton) to MP 169.04 (Freeport-McMoRan Mine Entrance)	R17-6-402			Over 12' - 16' = F/R	
U.S. Highway 191 Temp (UX 191)	MP 169.04 (Freeport-McMoRan Mine Entrance) to MP 169.20 (Freeport-McMoRan Viaduct)	R17-6-402			Over 8' 6" requires class C permit	
U.S. Highway 191 Temp (UX 191)	MP 169.20 (~~Phelps Dodge~~ Freeport-McMoRan Viaduct - Structure 1631)	~~R17-6-406; R17-6-408~~ R17-6-402			Over 8' 6" requires class C permit	~~Class A permitted vehicles with a gross weight of:~~ ~~100,000 or less - no additional restrictions;~~ ~~100,001 through 150,000 - drivers shall:~~ ~~Coordinate road closures by or under the direction of law enforcement; and~~ ~~Cross on center of bridge at a constant speed of no more than 10 mph while on bridge.~~ ~~Class C permits and special analysis and approval from the ADOT Bridge Group are required for vehicles with a gross weight of 150,001 or more.~~ Class A permitted vehicles with a gross weight of: 100,000 or less - no additional restrictions; 100,001 through 150,000 - drivers shall: Coordinate road closures by or under the direction of 2 law enforcement escorts; and Cross on center of bridge at a constant speed of no more than 10 mph while on bridge. 150,001 or more requires a Class C permit with special analysis and approval from the ADOT Bridge Group.
U.S. Highway 191 Temp (UX 191)	MP 169.20 (~~Phelps Dodge~~ Freeport-McMoRan Viaduct) to MP 169.30 (Railroad Underpass)	~~R17-6-406; R17-6-408~~ R17-6-402			Over 8' 6" requires class C permit	
U.S. Highway 191 Temp (UX 191)	MP 169.30 (Railroad Underpass - Structure 1632)	~~R17-6-406; R17-6-408~~ R17-6-402	15'		Over 8' 6" requires class C permit	
U.S. Highway 191 Temp (UX 191)	MP 169.30 (Railroad Underpass) to ~~MP 169.39~~ MP 169.90 (Rock Tunnel)	~~R17-6-406; R17-6-408~~ R17-6-402			Over 8' 6" requires class C permit	
U.S. Highway 191 Temp (UX 191)	~~MP 169.39~~ MP 169.90 (Rock Tunnel - Structure 1633)	~~R17-6-406; R17-6-408~~ R17-6-402	~~12' 6"~~ 12' 7"		Over 8' 6" requires class C permit	

Route	Restriction Location (MP = Milepost)	Transport Subject to:	Height	Length	Width	Weight (in lbs)
Escort requirements: F = front escort, R = rear escort, F/R = front and rear escort, and LE = law enforcement escort						
U.S. Highway 191 Temp (UX 191)	~~MP 169.39~~ MP 169.90 (Rock Tunnel) to MP 179.36 (Junction at end of Temporary US 191)	~~R17-6-406; R17-6-408~~ R17-6-402			Over 8' 6" requires class C permit	

R17-6-413. Renumbered

Table 5. Renumbered

R17-6-414. Renumbered

ARTICLE 5. ENVELOPE PERMIT SPECIAL PROVISIONS

R17-6-501. General Provision; Definitions

A. General Provision. The Department, in cooperation with the Department of Public Safety, shall issue and regulate oversize and overweight envelope permits as provided under this Chapter. The Department implements these Sections under authority of A.R.S. §§ 28-366, 28-1111, 28-1142, 28-1144, 28-1146, 28-1149, and 28-7045, in collaboration with the Overdimensional Permit Council as prescribed under A.R.S. § 28-1150.

B. Definitions. The definitions prescribed under R17-6-101, A.R.S. § 28-101, and A.R.S. § 28-601 also apply to this Article.

~~R17-6-210.~~R17-6-502. Envelope Permits - Non-specific and Non-reducible Vehicle or Load

A. The Department shall issue an annual or 30-day oversize envelope permit, or an annual or 30-day oversize and overweight envelope permit, according to the following criteria for a non-specific and non-reducible vehicle or load that meets the definition of envelope permit under R17-6-101, and does not exceed the maximum permitted weight computations for overweight axle group weight distribution as provided under R17-6-411:

Vehicle or load description	A non-specific and non-reducible vehicle or load that meets the definition of envelope permit under R17-6-101 and is within the maximum permitted weights provided under R17-6-411	
Permit option	30-day oversize only	
	30-day oversize and overweight	
	Annual oversize only	
	Annual oversize and overweight	
Fee (A.R.S. § 28-1143)	30-day oversize only	$150
	30-day oversize and overweight	$500
	Annual oversize only	$750
	Annual oversize and overweight	$1,500

B. An applicant for an oversize, or oversize and overweight, envelope permit shall apply to the Department and submit appropriate fees using the application procedure provided under ~~R17-6-103~~ R17-6-503.

C. An applicant for an oversize, or oversize and overweight, envelope permit provided by the Department under subsection (A) for a vehicle that is a self-propelled mobile crane, drilling rig, or similar specialty equipment meeting the dimensional requirements provided under ~~R17-6-201~~ R17-6-205, shall ~~provide~~ submit to the Department proof of gross weight:

1. For ~~an~~ initial application, a public weighmaster's certificate of weight and measure issued at a certified public scale once the vehicle is equipped and set for highway travel; or
2. For ~~a~~ renewal application, a certification by the applicant that no dimension has changed and the vehicle does not exceed the originally certified dimensions or weights.

D. ~~The Department shall assess an additional service charge for~~ An envelope permit holder shall apply to the Department for reissuance of the envelope permit to reflect any changes made to the permittee's name, address, or substitute power units after initial issuance and shall pay the fees prescribed under A.R.S. § 28-1143, as follows:

1. ~~A~~ For a modified permit duplicate: $25; ~~and~~ or
2. ~~Each~~ For each additional power unit exceeding the original number of permitted power units: $50.

E. A permittee or driver of an oversize or overweight vehicle or load shall not access a route listed under R17-6-412, Table 4, unless operating in full compliance with all indicated restrictions and requirements.

R17-6-503. General Application Procedure for Envelope Permits

A. Unless otherwise provided in this Chapter, an applicant requesting an envelope permit for transport of an oversize, overweight, or oversize and overweight vehicle, combination of vehicles, or vehicle and load combination shall apply to the Department using the appropriate application method provided below for each type of permit required:

1. For an envelope permit authorizing movement of a non-specific non-reducible vehicle, combination of vehicles, or vehicle and load combination with dimensions that do not exceed the class A oversize and overweight special permit limitations provided under R17-6-201, or the maximum permitted weight computations for overweight axle group weight distribution provided under R17-6-411:
   a. Complete the online application process using the Department's electronic permitting system available on the Department's web site; or
   b. Complete an oversize/overweight envelope permit application form, available on the Department's web site, and mail or deliver the written application to the Arizona Central Commercial Permits Office indicated on the application.
2. For an envelope permit authorizing movement of a houseboat or yacht under A.R.S. § 28-1144(B), complete an envelope permit application form, available on the Department's web site, and mail or deliver the written application to the Arizona Port of Entry location in Page.

B. Unless otherwise provided under this Chapter, an applicant for an oversize or overweight envelope permit shall provide to the Department, at the time of application, all applicable fees and information required by the Department under R17-6-502 and this Section for issuance of an appropriate class of permit, including:

1. Motor carrier related information:
   a. Name and address of the applicant's principal or established place of business;
   b. Name, phone number, and email address of an official company representative; and
   c. USDOT number;
2. Power unit related information:
   a. Vehicle make, body style, and year;
   b. Vehicle identification number;
   c. Unit number assigned;
   d. License plate number; and
   e. Base jurisdiction - state of registration;

3. Evidence of valid registration as provided under A.R.S. § 28-2153; and
4. Evidence of a valid IFTA license as provided under A.R.S. § 28-5742, if applicable.

C. An applicant for an oversize or overweight envelope permit shall certify to the Department that all information provided on the application is true and correct.

R17-6-504. Renumbered

R17-6-505. Renumbered

R17-6-506. Page-Lake Powell Area Houseboat Hauling Envelope Permit

A. An applicant requesting an envelope permit for a vehicle hauling a houseboat under A.R.S. § 28-1144(B) shall:

1. Apply to the Department using the application procedure provided under ~~R17-6-103~~ R17-6-503; and
2. Pay the applicable fees prescribed under ~~R17-6-210~~ R17-6-502.

B. A permittee issued an envelope permit under this Section shall:

1. Comply with all provisions applicable to the application, issuance, and maintenance of envelope permits under this Chapter;
2. Notify the Department as required under A.R.S. § 28-1144(B) before transporting a houseboat authorized by the envelope permit. This notification shall include at least the following information:
   a. The number of the authorizing envelope permit;
   b. The date of transport;
   c. The transport origination;
   d. The transport destination;
   e. The name and hull identification number of the houseboat being transported;
   f. The overall length, height, and width of the vehicle and load combination;
   g. The overall gross weight of the vehicle and load combination; and
   h. The total number of axles on the vehicle and load combination;
3. Notify the Department each time information submitted under subsection (B)(2) ~~of this Section~~ changes by submitting a new notification to the Department; and
4. Complete the notifications required under subsections (B)(2) and (B)(3) ~~of this Section~~ electronically through the Department's web site at www.azdot.gov.

C. For the purposes of this Section, and A.R.S. § 28-1144(B), the general term "houseboat" encompasses all large non-specific and non-reducible watercraft models transported by the envelope permit holder, including a yacht.

~~R17-6-501.~~R17-6-507. Envelope Permit Required Recordkeeping

A. An envelope permit holder shall maintain in this state, for at least three years, records and other data for all vehicles operated, and cargo transported, under an envelope permit as required under A.R.S. § 28-1149. The records and other data shall include:

1. Bills of lading,
2. Shipping manifests, and
3. Time cards or invoices.

B. A record retained by an envelope permit holder under subsection (A) shall contain, at least, the following information:

1. Date of document preparation,
2. Name of shipper and name of receiver,
3. Address of load origination,
4. Address of load destination, and
5. Dates of transport.

~~R17-6-502.~~R17-6-508. Envelope Permit Suspension Point System

The Director shall suspend an envelope permit, as prescribed under A.R.S. § 28-1147, by assigning points to the permittee for envelope permit violations as follows:

1. Minor violations - one point:
   a. Improper or inadequate flagging as provided under R17-6-302 and R17-6-307,
   b. Improper or inadequate lighting as provided under R17-6-304 and R17-6-307,
   c. Improper or inadequate "OVERSIZE LOAD" signage display as provided under R17-6-303,
   d. Use of an escort vehicle not equipped as provided under R17-6-305,
   e. Failing to maintain proper follow-distance from another oversize or overweight vehicle or load as provided under R17-6-401, or
   f. Exceeding permitted speed but not exceeding posted speed as provided under ~~R17-6-402~~ R17-6-401.
2. Major violations - three points:
   a. Transporting a permitted vehicle or load on a highway restricted to certain hours of travel under ~~R17-6-404 through R17-6-407, or R17-6-412, Table 4~~ Article 4 of this Chapter;
   b. Failing to display flags or lights when required under R17-6-302, R17-6-304, or R17-6-307;
   c. Failing to display "OVERSIZE LOAD" signage when required under R17-6-303;
   d. Exceeding the posted speed limit; or
   e. Transporting a reducible load under an envelope permit.
3. Weight Violations, 1-36 points:
   a. Gross vehicle weight exceeds the maximum weight allowed under R17-6-411:
      i. Less than 2% over allowable weight - one point,
      ii. 2% but less than 4% over allowable weight - two points,
      iii. 4% but less than 6% over allowable weight - three points,
      iv. 6% but less than 9% over allowable weight - six points,
      v. 9% but less than 12% over allowable weight - 10 points,
      vi. 12% but less than 15% over allowable weight - 18 points, or
      vii. 15% or more over allowable weight - 36 points.
   b. For each axle group exceeding the maximum weight allowed under R17-6-411:
      i. Less than 4% over allowable weight - one point,
      ii. 4% but less than 6% over allowable weight - two points,
      iii. 6% but less than 9% over allowable weight - four points,

iv. 9% but less than 12% over allowable weight - six points,

v. 12% but less than 15% over allowable weight - 10 points,

vi. 15% but less than 20% over allowable weight - 18 points, or

vii. 20% or more over allowable weight - 36 points.

4. Flagrant Violations - 36 points:

a. Transporting a permitted load on a highway during a hazardous condition restricting travel under ~~R17-6-403~~ R17-6-405 or in violation of a law enforcement agency order,

b. Exceeding an envelope dimension as prescribed under A.R.S. § 28-1144,

c. Falsifying a permit application,

d. Altering a permit,

e. Failing to pay repair costs for highway damages as prescribed under A.R.S. § 28-1107,

f. Transporting a permitted load on a restricted highway or restricted bridge,

g. Failing to use an escort vehicle as ~~provided under R17-6-305~~ required under this Chapter, or

h. Failing to use an escort vehicle with a driver that meets the standards provided under R17-6-305.

~~R17-6-503.~~R17-6-509. Envelope Permit Suspension; Revocation; Enforcement

A. The Director shall suspend an envelope permit for point accumulation within any 12-month period according to the following schedule:

1. 14-19 points, one-week suspension;
2. 20-29 points, two-week suspension;
3. 30-35 points, four-week suspension; and
4. More than 35 points, one-year suspension.

B. The Director shall revoke an envelope permit as provided under A.R.S. § 28-1147 for the following reasons:

1. Frequency of violation indicates a flagrant disregard for the law or the safety of the public,
2. A permittee does not have an established place of business, or
3. A permittee fails to maintain records as prescribed under ~~R17-6-501~~ R17-6-507 and A.R.S. § 28-1149.

C. A permittee shall surrender the permit to the Department within 72 hours after an order of suspension or revocation is effective.

1. If the permittee fails to surrender the permit within five working days of written demand, the Director shall suspend the permittee's envelope permit privileges for one year in addition to any other penalty assessed.
2. The Department shall retrieve the permit if the permittee fails to return the permit within the prescribed time.

D. The Department shall not issue an envelope permit to a permittee during the permittee's period of suspension or revocation.

~~R17-6-504.~~R17-6-510. Notice of Point Assessment, Denial, Suspension, or Revocation

A. The Department shall send to a permittee's last known address of record notice of the following:

1. Point assessment; or
2. Permit denial, suspension, or revocation.

B. The notice shall inform the permittee of:

1. The right to appeal the action, and
2. The procedure for requesting a hearing.

C. Any action taken under this Section becomes effective 25 days after the Department's action notice date unless a permittee submits a timely hearing request as provided under 17 A.A.C. 1, Article 5.

~~R17-6-505.~~R17-6-511. Envelope Permit Reapplication

A. An envelope permit applicant denied issuance by the Department, as prescribed under A.R.S. § 28-1142, shall not reapply for an envelope permit for two years from the date of denial.

B. An envelope permit applicant, who has previously had an envelope permit revoked by the Department under A.R.S. § 28-1147, shall not reapply for an envelope permit for two years from the date of revocation.

C. Upon reapplication, an applicant shall show by a preponderance of evidence that the underlying cause for denial or revocation has been removed.