# ARIZONA
# DEPARTMENT OF TRANSPORTATION

## HIGHWAYS DIVISION
## STRUCTURES SECTION
## STANDARD PLANS

## MARCH 1981

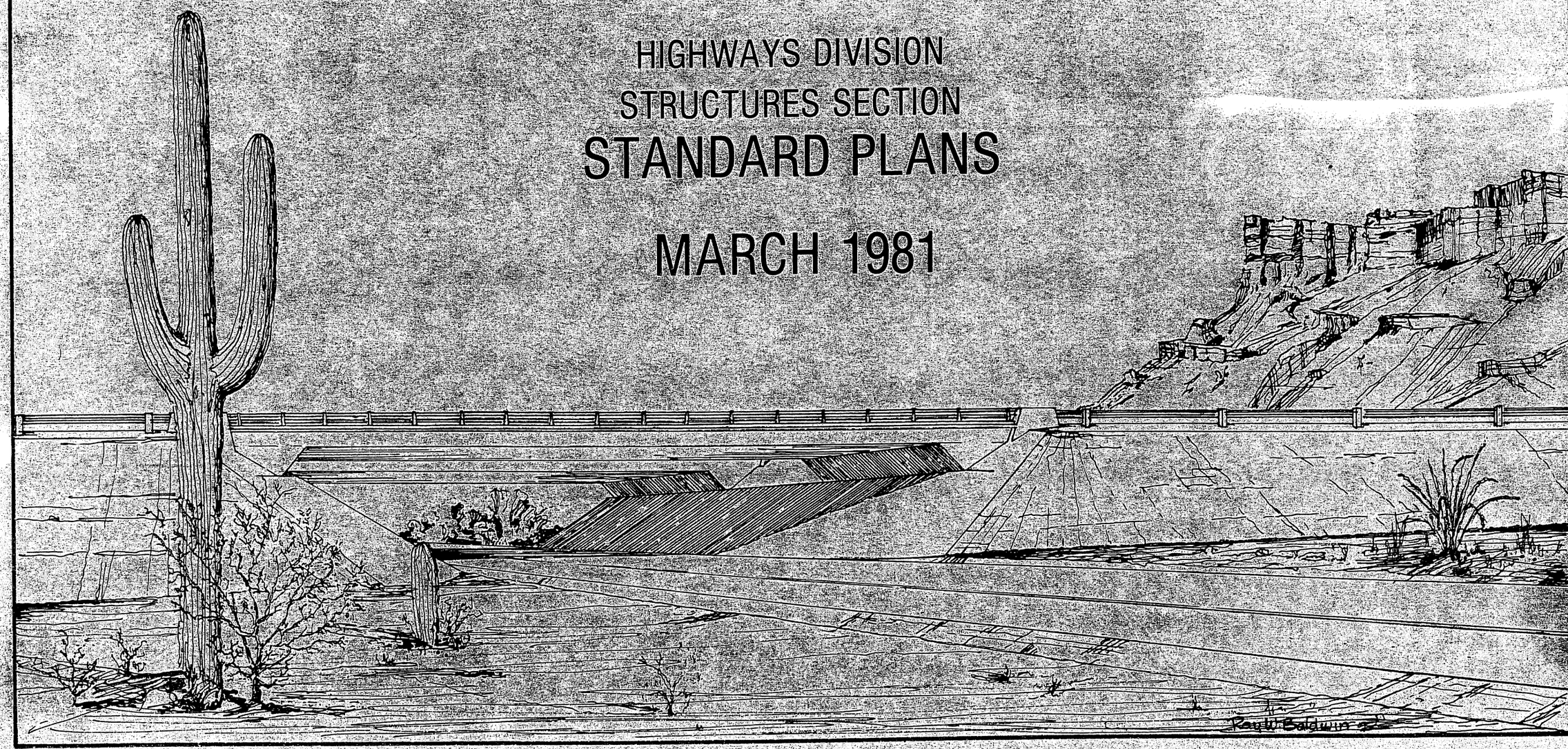

| | Description | Page | STD. No. |
|---|---|---|---|
| Face Sheet | Face sheet for 1987 Bridge Standards | 1 | |
| Index 1 of 2 | index for 1987 Bridge Standards | 2 | |
| Index 2 of 2 | index for 1987 Bridge Standards | 3 | |
| TOC | Table of Contents - Structure Section | 4 | |
| | **REINFORCED CONCRETE BOX CULVERTS** | | |
| B-01.10 | Miscellaneous Details for Standard Box Culverts | 5 | CM-1 |
| B-02.10 | Single Barrel Box Culvert | 6 | CB-1 |
| B-02.20 | Double Barrel Box Culvert | 7 | CB-2 |
| B-02.25 | Double Barrel Box Culvert | 8 | CB-2A |
| B-02.30 | Triple Barrel Box Culvert | 9 | CB-3 |
| B-02.35 | Triple Barrel Box Culvert | 10 | CB-3A |
| B-02.40 | Four Barrel Box Culvert | 11 | CB-4 |
| B-02.45 | Four Barrel Box Culvert | 12 | CB-4A |
| B-02.50 | Five Barrel Box Culvert | 13 | CB-5 |
| B-02.55 | Five Barrel Box Culvert | 14 | CB-5A |
| B-02.60 | Six Barrel Box Culvert | 15 | CB-6 |
| B-02.65 | Six Barrel Box Culvert | 16 | CB-6A |
| B-03.10 | 16' x 14' Equipment Pass-Concrete Box | 17 | CEP-1 |
| B-04.10 | Inlet Wings, Right Angle Culvert 2:1 Slope, Height 3' to 7' | 18 | CW2-1 |
| B-04.20 | Inlet Wings, Right Angle Culvert 2:1 Slope, Height 8' to 12' | 19 | CW2-2 |
| B-04.30 | Outlet Wings, Right Angle Culvert 2:1 Slope, Height 3' to 7' | 20 | CW2-3 |
| B-04.40 | Outlet Wings, Right Angle Culvert 2:1 Slope, Height 8' to 12' | 21 | CW2-4 |
| B-04.50 | Inlet or Outlet Wings 30° Skew Culvert 2:1 Slope Height 3' to 7' | 22 | CW2-5 |
| B-04.60 | Inlet or Outlet Wings 30° Skew Culvert 2:1 Slope Height 8' to 12' | 23 | CW2-6 |
| B-04.70 | Inlet or Outlet Wings 45° Skew Culvert 2:1 Slope Height 3' to 7' | 24 | CW2-7 |
| B-04.80 | Inlet or Outlet Wings 45° Skew Culvert 2:1 Slope Height 8' to 12' | 25 | CW2-8 |
| B-05.10 | Inlet Wings, Right Angle Culvert 6:1 Slope, Height 3' to 7' | 26 | CW6-1 |
| B-05.20 | Inlet Wings, Right Angle Culvert 6:1 Slope, Height 8' to 12' | 27 | CW6-2 |
| B-05.30 | Outlet Wings, Right Angle Culvert 6:1 Slope, Height 3' to 7' | 28 | CW6-3 |
| B-05.40 | Outlet Wings, Right Angle Culvert 6:1 Slope, Height 8' to 12' | 29 | CW6-4 |
| B-05.50 | Inlet or Outlet Wings 30° Skew Culvert 6:1 Slope Height 3' to 7' | 30 | CW6-5 |
| B-05.60 | Inlet or Outlet Wings 30° Skew Culvert 6:1 Slope Height 8' to 12' | 31 | CW6-6 |
| B-05.70 | Inlet or Outlet Wings 45° Skew Culvert 6:1 Slope Height 3' to 7' | 32 | CW6-7 |
| B-05.80 | Inlet or Outlet Wings 45° Skew Culvert 6:1 Slope Height 8' to 12' | 33 | CW6-8 |
| B-06.10 | Outlet Aprons For CW2 and CW6 Wings | 34 | CWA-1 |
| B-06.20 | Outlet Aprons For CW2 and CW6 Wings | 35 | CWA-2 |
| B-07.10 | Headwall Quantities For CW2 and CW6 Wings | 36 | CWQ-1 |
| B-08.10 | Inlet or Outlet Level Wings, Height 3' to 7' | 37 | CWL-1 |
| B-08.20 | Inlet or Outlet Level Wings, Height 8' to 12' | 38 | CWL-2 |
| | **CONTINUOUS SPAN CONCRETE SLAB BRIDGES** | **Page** | **STD. No.** |
| B-09.10 | Continuous Span Slab, HS20-44 Loading | 39 | CS-20 |
| B-09.20 | Continuous Span Slab With Hinge, HS20-44 Loading | 40 | CSH-20 |
| B-09.30 | Continuous Span Slab, Interstate Loading | 41 | CS-20I |
| B-09.40 | Continuous Span Slab with Hinge, Interstate Loading | 42 | CSH-201 |
| B-10.10 | Slab Hinge Joint & Hinge Span Reinforcing Details | 43 | CSH-M |
| | **REINFORCED CONCRETE HEADWALLS FOR PIPE CULVERTS** | | |
| B-11.10 | Pipe Culvert Headwalls- Miscellaneous Details | 44 | PH-1 |
| B-12.10 | Inlet Headwall, Right Angle Pipe Culvert | 45 | PH-2 |
| B-12.20 | Outlet Headwall, Right Angle Pipe Culvert | 46 | PH-3 |
| B-12.30 | Inlet and Outlet Headwalls, Right Angle Pipe Culvert, 2:1 Slope | 47 | PH-4 |
| B-12.40 | Inlet and Outlet Headwalls, Right Angle Pipe Culvert, 4:1 Slope | 48 | PH-5 |
| B-12.50 | Inlet and Outlet Headwalls, Right Angle Pipe Culvert, 6:1 Slope | 49 | PH-6 |
| B-13.10 | Inlet and Outlet Headwalls, 15° Skew Pipe Culvert | 50 | PH-7 |
| B-13.20 | Inlet and Outlet Headwalls, 15° Skew Pipe Culvert, 2:1 Slope | 51 | PH-8 |
| B-13.30 | Inlet and Outlet Headwalls, 15° Skew Pipe Culvert, 4:1 Slope | 52 | PH-9 |
| B-13.40 | Inlet and Outlet Headwalls, 15° Skew Pipe Culvert, 6:1 Slope | 53 | PH-10 |
| B-14.10 | Inlet and Outlet Headwalls, 30° Skew Pipe Culvert | 54 | PH-11 |
| B-14.20 | Inlet and Outlet Headwalls, 30° Skew Pipe Culvert, 2:1 Slope | 55 | PH-12 |
| B-14.30 | Inlet and Outlet Headwalls, 30° Skew Pipe Culvert, 4:1 Slope | 56 | PH-13 |
| B-14.40 | Inlet and Outlet Headwalls, 30° Skew Pipe Culvert, 6:1 Slope | 57 | PH-14 |
| B-15.10 | Inlet and Outlet Headwalls, 45° Skew Pipe Culvert | 58 | PH-15 |
| B-15.20 | Inlet and Outlet Headwalls, 45° Skew Pipe Culvert, 2:1 Slope | 59 | PH16 |
| B-15.30 | Inlet and Outlet Headwalls, 45° Skew Pipe Culvert, 4:1 Slope | 60 | PH-17 |
| B-15.40 | Inlet and Outlet Headwalls, 45° Skew Pipe Culvert, 6:1 Slope | 61 | PH-18 |
| B-16.10 | Multipipe Headwalls | 62 | PH-19 |
| B-17.10 | Outlet Aprons | 63 | PH-20 |
| B-17.20 | Outlet Apron Steel List 2:1 Slope | 64 | PH-21 |
| B-17.30 | Outlet Apron Steel List 4:1 Slope | 65 | PH-22 |
| B-17.40 | Outlet Apron Steel List 6:1 Slope | 66 | PH-23 |
| | **RETAINING WALLS** | | |
| B-18.10 | Cantilever Retaining Wall Details | 67 | RW-1 |
| B-18.20 | Catilever Retaining Walls on Spread Footings | 68 | RW-2 |
| B-18.30 | Cantilever Retaining Walls on Steel Piles | 69 | RW-3 |
| B-18.40 | Cantilever Retaining Walls on Concrete Piles | 70 | RW-4 |

***MISCELLANEOUS STANDARDS***

| | | | |
|---|---|---|---|
| *B-19.10* | *Miscellaneous Details for Bridges* | *71* | *BM-1* |
| *B-20.10* | *Concrete Pile Details, Precast and Cast-in-Place Piles* | *72* | *CP-1* |
| *B-20.20* | *Concrete Pile Details, Prestressed Piles* | *73* | *CP-2* |
| *B-21.10* | *Guard Rail End Shoe-Dado Connection* | *74* | *GD-1* |
| *B-22.10* | *Single Handrail* | *75* | *H-1-1* |
| *B-22.20* | *Double Handrail* | *76* | *H-2-1* |
| *B-22.30* | *Triple Hanrail* | *77* | *H-3-1* |
| *B-23.10* | *Rail Bank Protection for Bridges* | *78* | *RB-2* |
| *B-24.10* | *Roadway Joint-Steel* | *79* | *RJ-3* |
| *B-24.20* | *Roadway Joint Polychloroprene* | *80* | *RJ-4* |

# A.D.O.T. STANDARD DRAWINGS — STRUCTURES SECTION

| EFFECTIVE OR REVISION DATE | DESCRIPTION | PLAN NUMBER | STANDARD NUMBER |
|---|---|---|---|
| | REINFORCED CONCRETE BOX CULVERTS | | |
| | Miscellaneous Details For Standard Box Culverts | B-01.10 | CM-1 |
| | | | |
| | Single Barrel Box Culvert | B-02.10 | CB-1 |
| | Double Barrel Box Culvert | B-02.20 | CB-2 |
| | Double Barrel Box Culvert | B-02.25 | CB-2A |
| | Triple Barrel Box Culvert | B-02.30 | CB-3 |
| | Triple Barrel Box Culvert | B-02.35 | CB-3A |
| | Four Barrel Box Culvert | B-02.40 | CB-4 |
| | Four Barrel Box Culvert | B-02.45 | CB-4A |
| | Five Barrel Box Culvert | B-02.50 | CB-5 |
| | Five Barrel Box Culvert | B-02.55 | CB-5A |
| | Six Barrel Box Culvert | B-02.60 | CB-6 |
| | Six Barrel Box Culvert | B-02.65 | CB-6A |
| | | | |
| | | | |
| | 16'x 14' Equipment Pass-Concrete Box | B-03.10 | CEP-1 |
| | | | |
| | | | |
| | | | |
| | Inlet Wings, Right Angle Culvert 2:1 Slope, Height 3' to 7' | B-04.10 | CW2-1 |
| | Inlet Wings, Right Angle Culvert 2:1 Slope, Height 8' to 12' | B-04.20 | CW2-2 |
| | Outlet Wings, Right Angle Culvert 2:1 Slope, Height 3' to 7' | B-04.30 | CW2-3 |
| | Outlet Wings, Right Angle Culvert 2:1 Slope, Height 8' to 12' | B-04.40 | CW2-4 |
| | Inlet or Outlet Wings 30° Skew Culvert 2:1 Slope Height 3' to 7' | B-04.50 | CW2-5 |
| | Inlet or Outlet Wings 30° Skew Culvert 2:1 Slope Height 8' to 12' | B-04.60 | CW2-6 |
| | Inlet or Outlet Wings 45° Skew Culvert 2:1 Slope Height 3' to 7 | B-04.70 | CW2-7 |
| | Inlet or Outlet Wings 45° Skew Culvert 2:1 Slope Height 8' to 12' | B-04.80 | CW2-8 |
| | | | |
| | | | |
| | Inlet Wings, Right Angle Culvert, 6:1 Slope, Height 3' to 7' | B-05.10 | CW6-1 |
| | Inlet Wings, Right Angle Culvert, 6:1 Slope, Height 8' to 12' | B-05.20 | CW6-2 |
| | Outlet Wings, Right Angle Culvert 6:1 Slope, Height 3' to 7' | B-05.30 | CW6-3 |
| | Outlet Wings, Right Angle Culvert 6:1 Slope, Height 8' to 12' | B-05.40 | CW6-4 |
| | Inlet or Outlet Wings, 30° Skew Culvert 6:1 Slope, Height 3' to 7' | B-05.50 | CW6-5 |
| | Inlet or Outlet Wings, 30° Skew Culvert 6:1 Slope, Height 8' to 12' | B-05.60 | CW6-6 |
| | Inlet or Outlet Wings, 45° Skew Culvert 6:1 Slope, Height 3' to 7' | B-05.70 | CW6-7 |
| | Inlet or Outlet Wings, 45° Skew Culvert 6:1 Slope, Height 8' to 12' | B-05.80 | CW6-8 |
| | | | |
| | | | |
| | Outlet Aprons For CW2 And CW6 Wings | B-06.10 | CWA-1 |
| | Outlet Aprons For CW2 And CW6 Wings | B-06.20 | CWA-2 |
| | | | |
| | Headwall Quantities For CW2 And CW6 Wings | B-07.10 | CWQ-1 |
| | | | |
| | Inlet or Outlet Level Wings, Height 3' to 7' | B-08.10 | CWL-1 |
| | Inlet or Outlet Level Wings, Height 8' to 12' | B-08.20 | CWL-2 |
| | | | |
| | | | |
| | CONTINUOUS SPAN CONCRETE SLAB BRIDGES | | |
| | Continuous Span Slab, HS20-44 Loading | B-09.10 | CS-20 |
| | Continuous Span Slab With Hinge, HS20-44 Loading | B-09.20 | CSH-20 |
| | Continuous Span Slab, Interstate Loading | B-09.30 | CS-20I |
| | Continuous Span Slab With Hinge, Interstate Loading | B-09.40 | CSH-20I |
| | | | |
| | Slab Hinge Joint And Hinge Span Reinforcing Details | B-10.10 | CSH-M |

| EFFECTIVE OR REVISION DATE | DESCRIPTION | PLAN NUMBER | STANDARD NUMBER |
|---|---|---|---|
| | REINFORCED CONCRETE HEADWALLS FOR PIPE CULVERTS | | |
| | Pipe Culvert Headwalls – Miscellaneous Details | B-11.10 | PH-1 |
| | | | |
| | Inlet Headwall, Right Angle Pipe Culvert | B-12.10 | PH-2 |
| | Outlet Headwall, Right Angle Pipe Culvert | B-12.20 | PH-3 |
| | Inlet And Outlet Headwalls, Right Angle Pipe Culvert, 2:1 Slope | B-12.30 | PH-4 |
| | Inlet And Outlet Headwalls, Right Angle Pipe Culvert, 4:1 Slope | B-12.40 | PH-5 |
| | Inlet And Outlet Headwalls, Right Angle Pipe Culvert, 6:1 Slope | B-12.50 | PH-6 |
| | | | |
| | Inlet And Outlet Headwalls, 15° Skew Pipe Culvert | B-13.10 | PH-7 |
| | Inlet And Outlet Headwalls, 15° Skew Pipe Culvert, 2:1 Slope | B-13.20 | PH-8 |
| | Inlet And Outlet Headwalls, 15° Skew Pipe Culvert, 4:1 Slope | B-13.30 | PH-9 |
| | Inlet And Outlet Headwalls, 15° Skew Pipe Culvert, 6:1 Slope | B-13.40 | PH-10 |
| | | | |
| | Inlet And Outlet Headwalls, 30° Skew Pipe Culvert | B-14.10 | PH-11 |
| | Inlet And Outlet Headwalls, 30° Skew Pipe Culvert, 2:1 Slope | B-14.20 | PH-12 |
| | Inlet And Outlet Headwalls, 30° Skew Pipe Culvert, 4:1 Slope | B-14.30 | PH-13 |
| | Inlet And Outlet Headwalls, 30° Skew Pipe Culvert, 6:1 Slope | B-14.40 | PH-14 |
| | | | |
| | Inlet And Outlet Headwalls, 45° Skew Pipe Culvert | B-15.10 | PH-15 |
| | Inlet And Outlet Headwalls, 45° Skew Pipe Culvert, 2:1 Slope | B-15.20 | PH-16 |
| | Inlet And Outlet Headwalls, 45° Skew Pipe Culvert, 4:1 Slope | B-15.30 | PH-17 |
| | Inlet And Outlet Headwalls, 45° Skew Pipe Culvert, 6:1 Slope | B-15.40 | PH-18 |
| | | | |
| | Multipipe Headwalls | B-16.10 | PH-19 |
| | | | |
| | Outlet Aprons | B-17.10 | PH-20 |
| | Outlet Apron Steel List 2:1 Slope | B-17.20 | PH-21 |
| | Outlet Apron Steel List 4:1 Slope | B-17.30 | PH-22 |
| | Outlet Apron Steel List 6:1 Slope | B-17.40 | PH-23 |
| | | | |
| | | | |
| | RETAINING WALLS | | |
| | Cantilever Retaining Wall Details | B-18.10 | RW-1 |
| | Cantilever Retaining Walls On Spread Footings | B-18.20 | RW-2 |
| | Cantilever Retaining Walls On Steel Piles | B-18.30 | RW-3 |
| | Cantilever Retaining Walls On Concrete Piles | B-18.40 | RW-4 |
| | | | |
| | | | |
| | MISCELLANEOUS STANDARDS | | |
| | Miscellaneous Details For Bridges | B-19.10 | BM-1 |
| | | | |
| | Concrete Pile Details, Precast And Cast-in-Place Piles | B-20.10 | CP-1 |
| | Concrete Pile Details, Prestressed Piles | B-20.20 | CP-2 |
| | | | |
| | Guard Rail End Shoe-Dado Connection | B-21.10 | GD-1 |
| | | | |
| | Single Handrail | B-22.10 | H-1-1 |
| | Double Handrail | B-22.20 | H-2-1 |
| | Triple Handrail | B-22.30 | H-3-1 |
| | | | |
| | Rail Bank Protection For Bridges | B-23.10 | RB-2 |
| | | | |
| | Roadway Joint Steel | B-24.10 | RJ-3 |
| | Roadway Joint Polychloroprene | B-24.20 | RJ-4 |
| | | | |

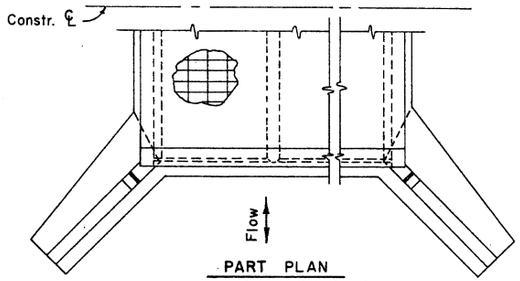


PART PLAN
Showing Inlet & Outlet Details

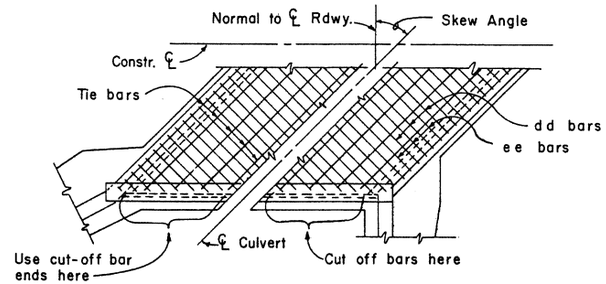


PART PLAN-SKEWED CULVERT
Showing Reinf. Steel Placement

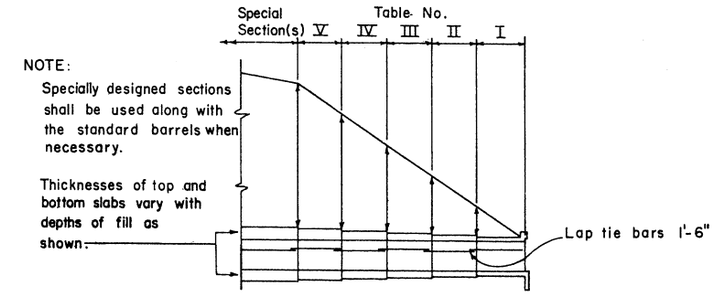


NOTE:
Specially designed sections shall be used along with the standard barrels when necessary.

Thicknesses of top and bottom slabs vary with depths of fill as shown.

DIAGRAM SHOWING TABLES TO BE USED FOR VARIOUS FILL HEIGHTS
NOTE: Culvert barrels always begin and end with Table No. I.

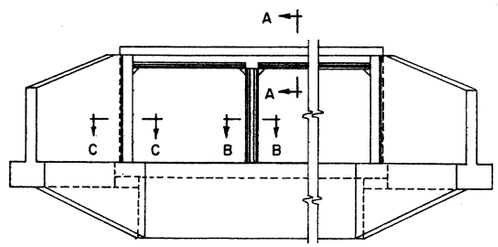


TYPICAL ELEVATION

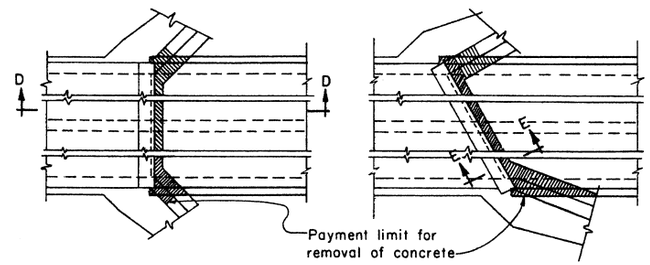


RIGHT ANGLE CULVERT
SKEWED CULVERT
PLAN

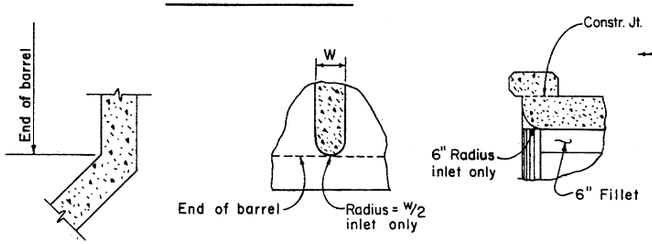


SECTION C-C
SECTION B-B
SECTION A-A
TYPICAL DETAILS

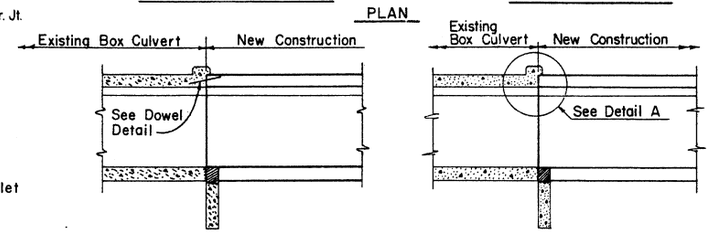


SECTION D-D
SECTION E-E
EXTENSION OF CULVERTS

GENERAL NOTES:
Construction – Standard Specifications Arizona Highway Department Edition of 1969, revised to date.
Design – A.A.S.H.O. Standard Specifications for Highway Bridges 1973.
Loading – HS20-44 and Interstate Alternate Loading.
Stresses: Class A concrete $f_c$ = 1000 P.S.I.
Reinforcing steel $f_s$ = 20,000 P.S.I.
Concrete shall be Class A
Reinforcing steel shall conform to A.S.T.M. spec. A-615, grade 40.
All bend dimensions are out to out of bar.
All reinforcing steel shall have 2" clear cover unless noted otherwise.

QUANTITY NOTE:
Total Box Culvert Quantities include Barrel Quantities and Headwall Quantities. Add Apron Quantity when apron is used.
Standard headwall quantities include wings, curb and cut-off wall.
Barrel Quantities are obtained by multiplying length of box by quantities per linear foot of box.

JOINT NOTE:
All structures shall have formed constr. joints in top slab and walls (optional in floor slab) spaced not more than 38'-6" apart or as shown. Reinforcing steel shall project 1'-6" thru the joint. The joint shall be made with $\frac{1}{4}$" plywood bulkhead which shall be left in place.

CONSTRUCTION NOTE:
Remove existing headwall as required for new construction.
If concrete headwall is removed to face of curb, no dowels are needed.
Use projecting reinforcing steel for bond in new concrete.
Curb to remain unless within 1'-0" of finish grade.
Wingwalls to be removed a Min. of 1'-6" to provide steel for bond.

NOTE A:
For culverts skewed from 1° to 30°, use 3 #7 bars* top and bottom of slab.
For culverts skewed over 30° to 45°, use 3 #8 bars* top and bottom of slab.
For culverts skewed over 45°, requires a special edge beam design.
*Reinforcing bars are same length as h bars in curb. Quantities to be calculated.

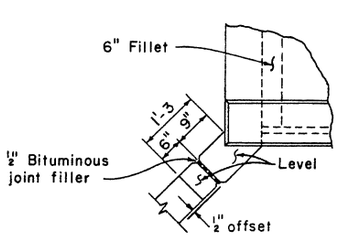


NOTE:
Footing shall be continuous with no joint.

WINGWALL JOINT DETAIL
For all barrels 8 ft. and over (H ≥ 8')

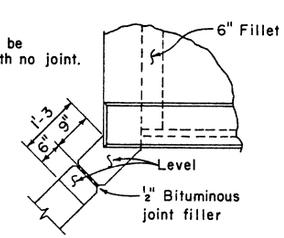


WINGWALL JOINT DETAIL
For all barrels under 8 ft. (H < 8')

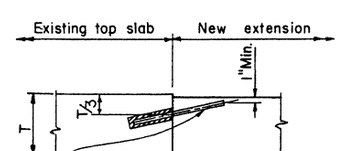


6 Dowels x 1'-9" @ 18"
Drill and set in an approved non shrink grout or epoxy 8" into existing concrete.
Top slab only.

DOWEL DETAIL

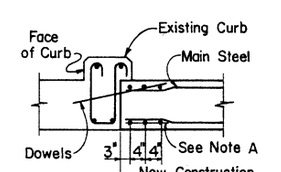


DETAIL A
EDGE BEAM

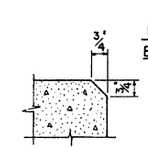


Chamfer all exposed corners thus unless otherwise noted.
This note applicable to all culvert sheets pertaining to the project.

| DESIGN | DHY | 8-72 | NO. | DESCRIPTION OF REVISIONS | MADE BY | DATE |
|---|---|---|---|---|---|---|
| DRAWN | FDL | 9-72 | 1 | Edge Beam Added with Note | SEA | 10-74 |
| CHECKED | NAB | 3-73 | 2 | Added Notes & Changed Details | JTW | 7-76 |

| DESIGN APPROVED | ARIZONA DEPARTMENT OF TRANSPORTATION HIGHWAYS DIVISION STANDARD PLANS | REVISION |
|---|---|---|
| APPROVED FOR DISTRIBUTION | MISCELLANEOUS DETAILS FOR STANDARD BOX CULVERTS | STANDARD NO. CM-1 |
| | | PLAN NO. B-01.10 |

## TABLE NO. I
### 0'-10' FILL

| Span "S" | Height "H" | Top Slab "T" | Walls "W" | aa Spacing | aa Length | cc ⌖ Number | ee Size | ee Spacing | ee Length | gg ⌖ Number | hh Size | hh Spacing | hh Length | F |
|---|---|---|---|---|---|---|---|---|---|---|---|---|---|---|
| 6' | 3' | 8" | 8" | 15" | 4'-0 | 20 | #5 | 5" | 7'-0 | 22 | #4 | 5" | 4'-9 | 2'-3 |
| | 4' | 8" | 8" | 15" | 5'-0 | 24 | #5 | 5" | 7'-0 | 22 | #4 | 5" | 5'-3 | 2'-3 |
| | 5' | 8" | 8" | 18" | 6'-0 | 24 | #6 | 6" | 7'-0 | 22 | #5 | 6" | 5'-9 | 2'-2 |
| | 6' | 8" | 8" | 18" | 7'-0 | 28 | #6 | 6" | 7'-0 | 22 | #5 | 6" | 6'-3 | 2'-2 |
| | 7' | 8" | 8" | 12" | 8'-0 | 32 | #6 | 6" | 7'-0 | 22 | #5 | 6" | 7'-3 | 2'-8 |
| 8' | 3' | 8" | 9" | 15" | 4'-0 | 20 | #5 | 5" | 9'-0 | 22 | #5 | 5" | 5'-6 | 2'-11 |
| | 4' | 8" | 9" | 15" | 5'-0 | 24 | #5 | 5" | 9'-0 | 22 | #5 | 5" | 5'-9 | 2'-8 |
| | 5' | 8" | 9" | 18" | 6'-0 | 24 | #6 | 6" | 9'-0 | 26 | #5 | 6" | 6'-3 | 2'-8 |
| | 6' | 8½" | 9" | 18" | 7'-0 | 28 | #6 | 6" | 9'-0 | 26 | #5 | 6" | 6'-9 | 2'-8 |
| | 7' | 8½" | 9" | 18" | 8'-0 | 32 | #6 | 6" | 9'-0 | 26 | #5 | 6" | 7'-3 | 2'-8 |
| | 8' | 8½" | 9" | 12" | 9'-0 | 32 | #6 | 6" | 9'-0 | 26 | #5 | 6" | 7'-9 | 2'-8 |
| 10' | 3' | 9" | 10" | 18" | 4'-3 | 20 | #7 | 9" | 11'-3 | 28 | #7 | 9" | 6'-6 | 3'-7 |
| | 4' | 9" | 10" | 17" | 5'-3 | 24 | #7 | 8½" | 11'-3 | 28 | #7 | 8½" | 7'-0 | 3'-7 |
| | 5' | 9" | 10" | 15" | 6'-3 | 24 | #8 | 10" | 11'-3 | 34 | #5 | 5" | 7'-0 | 3'-4 |
| | 6' | 9½" | 10" | 15" | 7'-3 | 28 | #8 | 10" | 11'-3 | 34 | #5 | 5" | 7'-3 | 3'-0 |
| | 7' | 9½" | 10" | 15" | 8'-3 | 32 | #8 | 10" | 11'-3 | 34 | #5 | 5" | 7'-9 | 3'-0 |
| | 8' | 10" | 10" | 15" | 9'-3 | 32 | #8 | 10" | 11'-3 | 34 | #5 | 5" | 8'-3 | 3'-0 |
| | 9' | 10" | 10" | 14" | 10'-3 | 36 | #7 | 7" | 11'-3 | 36 | #6 | 7" | 9'-0 | 3'-2 |
| | 10' | 10½" | 10" | 14" | 11'-3 | 40 | #7 | 7" | 11'-3 | 36 | #6 | 7" | 9'-6 | 3'-2 |
| 12' | 8' | 11" | 12" | 18" | 9'-6 | 32 | #7 | 6" | 13'-6 | 46 | #6 | 6" | 9'-3 | 3'-10 |
| | 9' | 11½" | 12" | 17" | 10'-6 | 36 | #8 | 8½" | 13'-6 | 46 | #7 | 8½" | 10'-3 | 4'-2 |
| | 10' | 11½" | 12" | 18" | 11'-6 | 40 | #7 | 6" | 13'-6 | 46 | #6 | 6" | 10'-6 | 4'-0 |
| | 11' | 12" | 12" | 18" | 12'-6 | 40 | #7 | 6" | 13'-6 | 46 | #6 | 6" | 10'-9 | 3'-9 |
| | 12' | 12" | 12" | 12" | 13'-6 | 44 | #7 | 6" | 13'-6 | 46 | #6 | 6" | 11'-6 | 4'-0 |

## TABLE NO. II
### 15'-15' FILL

| Span "S" | Height "H" | Top Slab "T" | Walls "W" | aa Spacing | aa Length | cc ⌖ Number | ee Size | ee Spacing | ee Length | gg ⌖ Number | hh Size | hh Spacing | hh Length | F |
|---|---|---|---|---|---|---|---|---|---|---|---|---|---|---|
| 6' | 3' | 8" | 8" | 18" | 4'-0 | 20 | #5 | 6" | 7'-0 | 14 | #4 | 6" | 4'-6 | 2'-0 |
| | 4' | 8" | 8" | 18" | 5'-0 | 24 | #5 | 6" | 7'-0 | 14 | #4 | 6" | 5'-0 | 2'-0 |
| | 5' | 8" | 8" | 18" | 6'-0 | 24 | #5 | 6" | 7'-0 | 14 | #4 | 6" | 5'-6 | 2'-0 |
| | 6' | 8" | 8" | 18" | 7'-0 | 28 | #5 | 6" | 7'-0 | 14 | #4 | 6" | 6'-0 | 2'-0 |
| | 7' | 8" | 8" | 18" | 8'-0 | 32 | #5 | 6" | 7'-0 | 14 | #4 | 6" | 6'-6 | 2'-0 |
| 8' | 3' | 8½" | 9" | 15" | 4'-0 | 20 | #5 | 5" | 9'-0 | 18 | #5 | 5" | 5'-3 | 2'-6 |
| | 4' | 8½" | 9" | 15" | 5'-0 | 24 | #5 | 5" | 9'-0 | 18 | #5 | 5" | 5'-9 | 2'-6 |
| | 5' | 9" | 9" | 18" | 6'-0 | 24 | #6 | 6" | 9'-0 | 18 | #5 | 6" | 6'-0 | 2'-3 |
| | 6' | 9" | 9" | 18" | 7'-0 | 28 | #6 | 6" | 9'-0 | 18 | #5 | 6" | 6'-6 | 2'-3 |
| | 7' | 9" | 9" | 18" | 8'-0 | 32 | #6 | 6" | 9'-0 | 18 | #5 | 6" | 7'-0 | 2'-3 |
| | 8' | 9" | 9" | 18" | 9'-0 | 32 | #6 | 6" | 9'-0 | 18 | #5 | 6" | 7'-9 | 2'-6 |
| 10' | 3' | 10" | 10" | 18" | 4'-3 | 20 | #6 | 6" | 11'-3 | 22 | #6 | 6" | 5'-9 | 2'-11 |
| | 4' | 10" | 10" | 18" | 5'-3 | 24 | #7 | 6" | 11'-3 | 22 | #6 | 6" | 6'-3 | 2'-11 |
| | 5' | 10½" | 10" | 14" | 6'-3 | 24 | #7 | 7" | 11'-3 | 22 | #6 | 7" | 6'-6 | 2'-7 |
| | 6' | 11" | 10" | 14" | 7'-3 | 28 | #7 | 7" | 11'-3 | 22 | #6 | 7" | 7'-0 | 2'-7 |
| | 7' | 11" | 10" | 14" | 8'-3 | 32 | #7 | 7" | 11'-3 | 22 | #6 | 7" | 7'-6 | 2'-7 |
| | 8' | 11" | 10" | 14" | 9'-3 | 32 | #8 | 7" | 11'-3 | 22 | #6 | 7" | 8'-0 | 2'-7 |
| | 9' | 11" | 10" | 14" | 10'-3 | 36 | #8 | 7" | 11'-3 | 22 | #6 | 7" | 8'-6 | 2'-7 |
| | 10' | 11" | 10" | 14" | 11'-3 | 40 | #8 | 7" | 11'-3 | 22 | #6 | 7" | 9'-0 | 2'-7 |
| 12' | 8' | 13" | 12" | 16" | 9'-9 | 32 | #9 | 8" | 13'-6 | 26 | #7 | 8" | 9'-0 | 3'-3 |
| | 9' | 13" | 12" | 16" | 10'-9 | 36 | #9 | 8" | 13'-6 | 26 | #7 | 8" | 9'-6 | 3'-3 |
| | 10' | 13" | 12" | 16" | 11'-9 | 40 | #9 | 8" | 13'-6 | 26 | #7 | 8" | 10'-6 | 3'-3 |
| | 11' | 13" | 12" | 16" | 12'-9 | 40 | #9 | 8" | 13'-6 | 26 | #7 | 8" | 11'-0 | 3'-3 |
| | 12' | 13½" | 12" | 16" | 13'-9 | 44 | #9 | 8" | 13'-6 | 26 | #7 | 8" | 11'-0 | 3'-3 |

## TABLE NO. III
### 15'-20' FILL

| Span "S" | Height "H" | Top Slab "T" | Walls "W" | aa Spacing | aa Length | cc ⌖ Number | ee Size | ee Spacing | ee Length | gg ⌖ Number | hh Size | hh Spacing | hh Length | F |
|---|---|---|---|---|---|---|---|---|---|---|---|---|---|---|
| 6' | 3' | 8" | 8" | 16½" | 4'-0 | 20 | #5 | 5½" | 7'-0 | 14 | #5 | 5½" | 4'-9 | 2'-2 |
| | 4' | 8" | 8" | 16½" | 5'-0 | 24 | #5 | 5½" | 7'-0 | 14 | #5 | 5½" | 5'-3 | 1'-10 |
| | 5' | 8" | 8" | 16½" | 6'-0 | 24 | #5 | 5½" | 7'-0 | 14 | #5 | 5½" | 5'-6 | 1'-10 |
| | 6' | 8½" | 8" | 16½" | 7'-0 | 28 | #5 | 5½" | 7'-0 | 14 | #5 | 5½" | 6'-0 | 1'-10 |
| | 7' | 8½" | 8" | 16½" | 8'-0 | 32 | #5 | 5½" | 7'-0 | 14 | #5 | 5½" | 6'-9 | 2'-2 |
| 8' | 3' | 10" | 9" | 15" | 4'-3 | 20 | #8 | 10" | 9'-0 | 18 | #5 | 5" | 5'-0 | 2'-2 |
| | 4' | 10" | 9" | 15" | 5'-3 | 24 | #8 | 10" | 9'-0 | 18 | #5 | 5" | 5'-6 | 2'-2 |
| | 5' | 10½" | 9" | 15" | 6'-3 | 24 | #8 | 10" | 9'-0 | 18 | #5 | 5" | 6'-0 | 2'-2 |
| | 6' | 10½" | 9" | 15" | 7'-3 | 28 | #8 | 10" | 9'-0 | 18 | #5 | 5" | 6'-6 | 2'-2 |
| | 7' | 10½" | 9" | 18" | 8'-3 | 32 | #8 | 9" | 9'-0 | 18 | #6 | 6" | 7'-3 | 2'-4 |
| | 8' | 10½" | 9" | 18" | 9'-3 | 32 | #8 | 9" | 9'-0 | 18 | #6 | 6" | 7'-9 | 2'-4 |
| 10' | 3' | 12" | 10" | 16½" | 4'-6 | 20 | #9 | 11" | 11'-3 | 22 | #6 | 5½" | 5'-9 | 2'-9 |
| | 4' | 12" | 10" | 18" | 5'-6 | 24 | #7 | 6" | 11'-3 | 22 | #6 | 6" | 6'-0 | 2'-5 |
| | 5' | 12½" | 10" | 18" | 6'-6 | 24 | #7 | 6" | 11'-3 | 22 | #6 | 6" | 6'-6 | 2'-5 |
| | 6' | 12½" | 10" | 18" | 7'-6 | 28 | #7 | 6" | 11'-3 | 22 | #6 | 6" | 7'-0 | 2'-5 |
| | 7' | 12½" | 10" | 18" | 8'-6 | 32 | #9 | 9" | 11'-3 | 22 | #5 | 4½" | 7'-3 | 2'-3 |
| | 8' | 13" | 10" | 18" | 9'-6 | 32 | #9 | 9" | 11'-3 | 22 | #5 | 4½" | 7'-9 | 2'-3 |
| | 9' | 13" | 10" | 18" | 10'-6 | 36 | #9 | 9" | 11'-3 | 22 | #5 | 4½" | 8'-3 | 2'-3 |
| | 10' | 13" | 10" | 18" | 11'-6 | 40 | #9 | 9" | 11'-3 | 22 | #5 | 4½" | 8'-9 | 2'-3 |
| 12' | 8' | 15" | 12" | 15" | 10'-0 | 32 | #9 | 7½" | 13'-6 | 26 | #7 | 7½" | 9'-0 | 3'-2 |
| | 9' | 15" | 12" | 15" | 11'-0 | 36 | #9 | 7½" | 13'-6 | 26 | #7 | 7½" | 9'-6 | 3'-2 |
| | 10' | 15½" | 12" | 15" | 12'-0 | 40 | #9 | 7½" | 13'-6 | 26 | #7 | 7½" | 10'-0 | 3'-2 |
| | 11' | 15½" | 12" | 15" | 13'-0 | 40 | #9 | 7½" | 13'-6 | 26 | #7 | 7½" | 10'-6 | 3'-2 |
| | 12' | 15½" | 12" | 15" | 14'-0 | 44 | #9 | 7½" | 13'-6 | 26 | #7 | 7½" | 11'-0 | 3'-2 |

## TABLE NO. IV
### 20'-25' FILL

| Span "S" | Height "H" | Top Slab "T" | Walls "W" | aa Spacing | aa Length | cc ⌖ Number | ee Size | ee Spacing | ee Length | gg ⌖ Number | hh Size | hh Spacing | hh Length | F |
|---|---|---|---|---|---|---|---|---|---|---|---|---|---|---|
| 6' | 3' | 9" | 8" | 18" | 4'-0 | 20 | #7 | 9" | 7'-0 | 14 | #5 | 4½" | 4'-6 | 1'-10 |
| | 4' | 9" | 8" | 18" | 5'-0 | 24 | #7 | 9" | 7'-0 | 14 | #5 | 4½" | 5'-0 | 1'-10 |
| | 5' | 9½" | 8" | 18" | 6'-3 | 24 | #7 | 9" | 7'-0 | 14 | #5 | 4½" | 5'-6 | 1'-10 |
| | 6' | 9½" | 8" | 18" | 7'-3 | 28 | #7 | 9" | 7'-0 | 14 | #5 | 4½" | 6'-0 | 1'-10 |
| | 7' | 9½" | 8" | 18" | 8'-3 | 32 | #7 | 9" | 7'-0 | 14 | #5 | 4½" | 6'-6 | 1'-10 |
| 8' | 3' | 11½" | 9" | 15" | 4'-6 | 20 | #6 | 5" | 9'-0 | 18 | #5 | 5" | 5'-0 | 2'-2 |
| | 4' | 11½" | 9" | 15" | 5'-6 | 24 | #6 | 5" | 9'-0 | 18 | #5 | 5" | 5'-6 | 2'-0 |
| | 5' | 11½" | 9" | 15" | 6'-6 | 24 | #6 | 5" | 9'-0 | 18 | #5 | 5" | 6'-0 | 2'-0 |
| | 6' | 12" | 9" | 15" | 7'-6 | 28 | #6 | 5" | 9'-0 | 18 | #5 | 5" | 6'-6 | 2'-0 |
| | 7' | 12" | 9" | 15" | 8'-6 | 32 | #6 | 5" | 9'-0 | 18 | #5 | 5" | 7'-0 | 2'-0 |
| | 8' | 12" | 9" | 15" | 9'-6 | 32 | #6 | 5" | 9'-0 | 18 | #5 | 5" | 7'-6 | 2'-0 |
| 10' | 3' | 14" | 10" | 14" | 5'-0 | 20 | #8 | 7" | 11'-3 | 22 | #7 | 7" | 6'-0 | 2'-8 |
| | 4' | 14" | 10" | 14" | 6'-0 | 24 | #8 | 7" | 11'-3 | 22 | #7 | 7" | 6'-6 | 2'-8 |
| | 5' | 14" | 10" | 18" | 7'-0 | 24 | #8 | 6" | 11'-3 | 22 | #6 | 6" | 6'-3 | 2'-1 |
| | 6' | 14½" | 10" | 15" | 8'-0 | 28 | #7 | 5" | 11'-3 | 22 | #5 | 5" | 6'-6 | 1'-11 |
| | 7' | 14½" | 10" | 15" | 9'-0 | 32 | #7 | 5" | 11'-3 | 22 | #5 | 5" | 7'-0 | 1'-11 |
| | 8' | 14½" | 10" | 15" | 10'-0 | 32 | #7 | 5" | 11'-3 | 22 | #5 | 5" | 7'-6 | 1'-11 |
| | 9' | 14½" | 10" | 18" | 11'-0 | 36 | #8 | 6" | 11'-3 | 22 | #6 | 6" | 8'-6 | 2'-4 |
| | 10' | 14½" | 10" | 12" | 12'-0 | 40 | #8 | 6" | 11'-3 | 22 | #6 | 6" | 9'-0 | 2'-4 |
| 12' | 8' | 17" | 12" | 16½" | 10'-3 | 32 | #8 | 5½" | 13'-6 | 26 | #6 | 5½" | 8'-6 | 2'-7 |
| | 9' | 17½" | 12" | 16½" | 11'-3 | 36 | #8 | 5½" | 13'-6 | 26 | #6 | 5½" | 9'-0 | 2'-7 |
| | 10' | 17½" | 12" | 16½" | 12'-3 | 40 | #8 | 5½" | 13'-6 | 26 | #6 | 5½" | 9'-6 | 2'-7 |
| | 11' | 17½" | 12" | 15" | 13'-3 | 40 | #8 | 5" | 13'-6 | 26 | #6 | 5" | 10'-0 | 2'-7 |
| | 12' | 17½" | 12" | 10" | 14'-3 | 44 | #8 | 5" | 13'-6 | 26 | #6 | 5" | 10'-6 | 2'-7 |

⌖ Total number of bars in the cross-section.

## TABLE NO. V
### 25'-30' FILL

| Span "S" | Height "H" | Top Slab "T" | Walls "W" | aa Spacing | aa Length | cc ⌖ Number | ee Size | ee Spacing | ee Length | gg ⌖ Number | hh Size | hh Spacing | hh Length | F |
|---|---|---|---|---|---|---|---|---|---|---|---|---|---|---|
| 6' | 3' | 10" | 8" | 16" | 4'-3 | 20 | #7 | 8" | 7'-0 | 14 | #4 | 4" | 4'-3 | 1'-7 |
| | 4' | 10½" | 8" | 16" | 5'-3 | 24 | #7 | 8" | 7'-0 | 14 | #4 | 4" | 4'-9 | 1'-7 |
| | 5' | 10½" | 8" | 16" | 6'-3 | 24 | #7 | 8" | 7'-0 | 14 | #4 | 4" | 5'-3 | 1'-7 |
| | 6' | 10½" | 8" | 16" | 7'-3 | 28 | #7 | 8" | 7'-0 | 14 | #4 | 4" | 5'-9 | 1'-7 |
| | 7' | 10½" | 8" | 12" | 8'-3 | 32 | #7 | 8" | 7'-0 | 14 | #4 | 4" | 6'-3 | 1'-7 |
| 8' | 3' | 13" | 9" | 15" | 4'-9 | 20 | #9 | 10" | 9'-0 | 18 | #5 | 5" | 5'-0 | 2'-0 |
| | 4' | 13" | 9" | 15" | 5'-9 | 24 | #9 | 10" | 9'-0 | 18 | #5 | 5" | 5'-6 | 2'-0 |
| | 5' | 13" | 9" | 15" | 6'-9 | 24 | #9 | 10" | 9'-0 | 18 | #5 | 5" | 6'-0 | 2'-0 |
| | 6' | 13" | 9" | 15" | 7'-9 | 28 | #9 | 10" | 9'-0 | 18 | #5 | 5" | 6'-6 | 2'-0 |
| | 7' | 13½" | 9" | 15" | 8'-9 | 32 | #9 | 10" | 9'-0 | 18 | #5 | 5" | 7'-0 | 2'-0 |
| | 8' | 13½" | 9" | 15" | 9'-9 | 32 | #9 | 10" | 9'-0 | 18 | #5 | 5" | 7'-6 | 2'-0 |
| 10' | 3' | 16" | 10" | 18" | 5'-3 | 20 | #8 | 6" | 11'-3 | 22 | #6 | 6" | 5'-6 | 2'-2 |
| | 4' | 16" | 10" | 18" | 6'-3 | 24 | #8 | 6" | 11'-3 | 22 | #6 | 6" | 6'-0 | 2'-2 |
| | 5' | 16" | 10" | 18" | 7'-3 | 24 | #8 | 6" | 11'-3 | 22 | #6 | 6" | 6'-6 | 2'-2 |
| | 6' | 16" | 10" | 18" | 8'-3 | 28 | #8 | 6" | 11'-3 | 22 | #6 | 6" | 7'-0 | 2'-2 |
| | 7' | 16" | 10" | 18" | 9'-3 | 32 | #8 | 6" | 11'-3 | 22 | #6 | 6" | 7'-6 | 2'-2 |
| | 8' | 16" | 10" | 18" | 10'-3 | 32 | #8 | 6" | 11'-3 | 22 | #6 | 6" | 8'-0 | 2'-2 |
| | 9' | 16½" | 10" | 12" | 11'-3 | 36 | #8 | 6" | 11'-3 | 22 | #6 | 6" | 8'-6 | 2'-2 |
| | 10' | 16½" | 10" | 12" | 12'-3 | 40 | #8 | 6" | 11'-3 | 22 | #6 | 6" | 9'-3 | 2'-4 |
| 12' | 8' | 19" | 12" | 18" | 10'-6 | 32 | #9 | 6" | 13'-6 | 26 | #6 | 6" | 8'-6 | 2'-4 |
| | 9' | 19½" | 12" | 18" | 11'-6 | 36 | #9 | 6" | 13'-6 | 26 | #6 | 6" | 9'-0 | 2'-4 |
| | 10' | 19½" | 12" | 15" | 12'-6 | 40 | #8 | 5" | 13'-6 | 26 | #6 | 5" | 9'-6 | 2'-4 |
| | 11' | 19½" | 12" | 15" | 13'-6 | 40 | #8 | 5" | 13'-6 | 26 | #6 | 5" | 10'-3 | 2'-7 |
| | 12' | 19½" | 12" | 10" | 14'-6 | 44 | #8 | 5" | 13'-6 | 26 | #6 | 5" | 10'-9 | 2'-7 |

## QUANTITIES PER LINEAR FT. OF BARREL

| Span "S" | Height "H" | Table I Concrete C.Y. | Table I Reinf. Steel Lbs. | Table II Concrete C.Y. | Table II Reinf. Steel Lbs. | Table III Concrete C.Y. | Table III Reinf. Steel Lbs. | Table IV Concrete C.Y. | Table IV Reinf. Steel Lbs. | Table V Concrete C.Y. | Table V Reinf. Steel Lbs. |
|---|---|---|---|---|---|---|---|---|---|---|---|
| 6' | 3' | .561 | 97.8 | .561 | 79.5 | .561 | 101.7 | .608 | 118.1 | .655 | 104.0 |
| | 4' | .610 | 104.8 | .610 | 85.8 | .610 | 109.9 | .657 | 123.6 | .728 | 111.6 |
| | 5' | .660 | 126.1 | .660 | 89.3 | .660 | 113.1 | .731 | 130.3 | .778 | 116.7 |
| | 6' | .709 | 133.8 | .709 | 95.6 | .733 | 121.3 | .780 | 139.4 | .827 | 124.3 |
| | 7' | .758 | 149.3 | .758 | 101.8 | .782 | 131.8 | .829 | 148.5 | .877 | 134.8 |
| 8' | 3' | .692 | 132.5 | .723 | 127.3 | .814 | 137.7 | .905 | 145.1 | .996 | 154.0 |
| | 4' | .748 | 138.7 | .779 | 136.0 | .870 | 146.4 | .961 | 153.9 | 1.052 | 162.7 |
| | 5' | .803 | 145.0 | .865 | 137.5 | .956 | 152.5 | 1.017 | 160.0 | 1.108 | 168.8 |
| | 6' | .889 | 152.7 | .920 | 145.3 | 1.011 | 161.2 | 1.102 | 168.7 | 1.163 | 177.5 |
| | 7' | .945 | 160.4 | .976 | 153.0 | 1.067 | 191.9 | 1.158 | 177.5 | 1.249 | 186.3 |
| | 8' | 1.000 | 169.5 | 1.031 | 160.2 | 1.122 | 198.8 | 1.214 | 183.5 | 1.305 | 197.6 |
| 10' | 3' | .899 | 168.0 | .973 | 168.5 | 1.128 | 191.3 | 1.277 | 220.9 | 1.418 | 219.0 |
| | 4' | .961 | 185.4 | 1.035 | 202.5 | 1.220 | 199.7 | 1.331 | 231.7 | 1.479 | 228.5 |
| | 5' | 1.023 | 187.6 | 1.134 | 183.7 | 1.282 | 206.6 | 1.393 | 232.2 | 1.541 | 235.4 |
| | 6' | 1.121 | 193.8 | 1.233 | 192.6 | 1.344 | 216.2 | 1.492 | 217.4 | 1.603 | 245.0 |
| | 7' | 1.183 | 202.6 | 1.294 | 201.6 | 1.405 | 226.3 | 1.554 | 226.2 | 1.665 | 254.6 |
| | 8' | 1.282 | 208.7 | 1.356 | 232.0 | 1.485 | 232.8 | 1.615 | 232.2 | 1.726 | 261.5 |
| | 9' | 1.344 | 231.4 | 1.418 | 241.0 | 1.547 | 241.9 | 1.677 | 270.8 | 1.825 | 276.1 |
| | 10' | 1.442 | 240.3 | 1.479 | 252.7 | 1.609 | 251.0 | 1.739 | 285.7 | 1.887 | 289.1 |
| 12' | 8' | 1.620 | 282.1 | 1.797 | 296.6 | 1.974 | 314.0 | 2.151 | 317.4 | 2.328 | 333.8 |
| | 9' | 1.739 | 284.8 | 1.871 | 306.4 | 2.048 | 324.3 | 2.270 | 327.6 | 2.447 | 343.4 |
| | 10' | 1.813 | 304.2 | 1.946 | 316.2 | 2.167 | 334.6 | 2.344 | 337.8 | 2.521 | 367.4 |
| | 11' | 1.931 | 308.1 | 2.020 | 323.3 | 2.241 | 342.2 | 2.418 | 375.5 | 2.595 | 386.5 |
| | 12' | 2.005 | 326.7 | 2.138 | 333.1 | 2.315 | 352.5 | 2.492 | 394.0 | 2.669 | 398.0 |

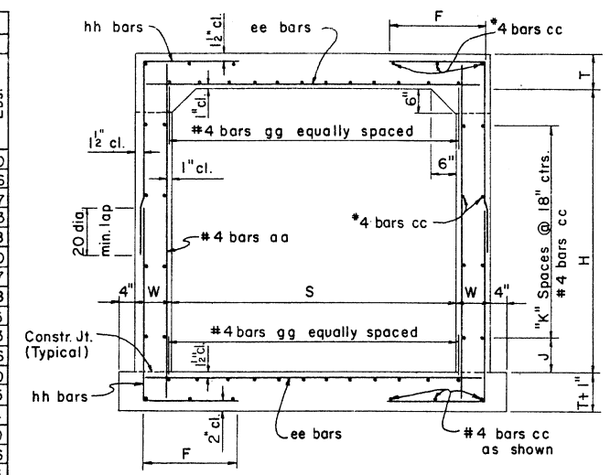


TYPICAL BARREL SECTION

| Height "H" | "J" Dimension | "K" Spaces |
|---|---|---|
| 3' | 9" | 1 |
| 4' | 3" | 2 |
| 5' | 12" | 2 |
| 6' | 9" | 3 |
| 7' | 3" | 4 |
| 8' | 12" | 4 |
| 9' | 9" | 5 |
| 10' | 3" | 6 |
| 11' | 12" | 6 |
| 12' | 9" | 7 |

NOTE:
See B-01.10 for general notes and miscellaneous details.

| NO. | DESCRIPTION OF REVISIONS | MADE BY | DATE |
|---|---|---|---|
| 12-71 | Conc. quantities Table II, 6' span | J.T.W. | 7-76 |
| 7-72 | | | |
| 3-73 | | | |

| | | |
|---|---|---|
| DESIGN | DHY | |
| DRAWN | APJ | |
| CHECKED | NAB | |

DESIGN APPROVED

APPROVED FOR DISTRIBUTION

ARIZONA
DEPARTMENT OF TRANSPORTATION
HIGHWAYS DIVISION
STANDARD PLANS

SINGLE BARREL
BOX CULVERT

REVISION

STANDARD NO. CB-1

PLAN NO. B-02.10

| QUANTITIES PER LIN. FOOT OF BARRELS | | | | | | | | | | | |
|---|---|---|---|---|---|---|---|---|---|---|---|
| Span "S" | Height "H" | Table I | | Table II | | Table III | | Table IV | | Table V | |
| | | Concrete C.Y. | Reinf. Steel Lbs. | Concrete C.Y. | Reinf. Steel Lbs. | Concrete C.Y. | Reinf. Steel Lbs. | Concrete C.Y. | Reinf. Steel Lbs. | Concrete C.Y. | Reinf. Steel Lbs. |
| 6' | 3' | .994 | 159.4 | .994 | 132.5 | 1.082 | 139.6 | 1.215 | 143.2 | 1.303 | 149.7 |
| | 4' | 1.068 | 167.0 | 1.068 | 142.9 | 1.156 | 149.5 | 1.289 | 153.0 | 1.378 | 159.1 |
| | 5' | 1.142 | 174.0 | 1.142 | 148.2 | 1.230 | 155.3 | 1.363 | 158.9 | 1.452 | 164.4 |
| | 6' | 1.216 | 186.7 | 1.216 | 167.1 | 1.305 | 165.1 | 1.437 | 169.0 | 1.526 | 174.1 |
| | 7' | 1.290 | 196.8 | 1.290 | 176.9 | 1.379 | 175.0 | 1.511 | 178.9 | 1.600 | 188.0 |
| 8' | 3' | 1.302 | 213.2 | 1.474 | 206.9 | 1.646 | 191.4 | 1.876 | 195.1 | 2.105 | 200.2 |
| | 4' | 1.385 | 246.9 | 1.557 | 201.4 | 1.729 | 200.7 | 1.959 | 204.9 | 2.188 | 210.1 |
| | 5' | 1.526 | 239.0 | 1.641 | 206.7 | 1.813 | 220.5 | 2.042 | 210.7 | 2.272 | 213.7 |
| | 6' | 1.609 | 251.3 | 1.724 | 216.1 | 1.896 | 230.8 | 2.126 | 222.0 | 2.355 | 223.5 |
| | 7' | 1.693 | 263.6 | 1.807 | 225.4 | 1.979 | 241.2 | 2.209 | 231.9 | 2.438 | 234.8 |
| | 8' | 1.776 | 274.4 | 1.891 | 254.6 | 2.063 | 249.4 | 2.292 | 244.4 | 2.522 | 266.9 |
| 10' | 3' | 1.777 | 310.8 | 2.059 | 261.3 | 2.412 | 259.9 | 2.693 | 278.2 | 3.046 | 281.9 |
| | 4' | 1.940 | 325.4 | 2.152 | 272.8 | 2.504 | 270.2 | 2.856 | 273.3 | 3.138 | 291.7 |
| | 5' | 2.033 | 328.7 | 2.315 | 281.9 | 2.667 | 278.6 | 2.949 | 278.6 | 3.231 | 297.6 |
| | 6' | 2.126 | 322.6 | 2.407 | 271.3 | 2.760 | 288.9 | 3.042 | 288.0 | 3.324 | 307.4 |
| | 7' | 2.218 | 335.5 | 2.500 | 281.1 | 2.852 | 299.3 | 3.134 | 298.6 | 3.416 | 317.2 |
| | 8' | 2.311 | 336.1 | 2.593 | 315.0 | 2.945 | 305.6 | 3.227 | 329.3 | 3.509 | 329.9 |
| | 9' | 2.403 | 349.8 | 2.685 | 325.3 | 3.038 | 316.5 | 3.319 | 340.2 | 3.601 | 348.4 |
| | 10' | 2.496 | 362.0 | 2.778 | 337.6 | 3.130 | 348.1 | 3.412 | 358.0 | 3.694 | 387.8 |
| 12' | 8' | 3.102 | 460.5 | 3.524 | 389.6 | 4.030 | 394.6 | 4.452 | 385.5 | 4.837 | 392.9 |
| | 9' | 3.213 | 476.7 | 3.635 | 402.7 | 4.141 | 407.5 | 4.563 | 428.9 | 4.985 | 439.3 |
| | 10' | 3.324 | 484.2 | 3.746 | 414.9 | 4.252 | 418.4 | 4.674 | 449.5 | 5.096 | 451.0 |
| | 11' | 3.435 | 493.9 | 3.857 | 422.3 | 4.363 | 425.2 | 4.785 | 455.3 | 5.207 | 474.0 |
| | 12' | 3.546 | 505.6 | 3.968 | 436.1 | 4.474 | 491.5 | 4.896 | 483.0 | 5.318 | 501.6 |

TABLE NO. I
0'-10' FILL

| Span "S" | Height "H" | Top Slab "T" | Walls "W" | aa | | | bb | | | cc | dd | | | | | | ee | | | ff | | | gg | | hh | | | |
|---|---|---|---|---|---|---|---|---|---|---|---|---|---|---|---|---|---|---|---|---|---|---|---|---|---|---|---|---|---|
| | | | | Size | Spacing | Length | Size | Spacing | Length | Number ⌖ | Size | Spacing | Length | A | B | C | Size | Spacing | Length | Size | Spacing | Length | Number ⌖ | D | Size | Spacing | Length | F |
| 6' | 3' | 8" | 8" | #4 | 11" | 3'-9 | #5 | 11" | 8'-3 | 48 | #4 | 11" | 13'-6 | 5'-0 | 2'-3 | 5½" | #5 | 11" | 13'-6 | #5 | 11" | 9'-3 | 20 | 3'-6 | #4 | 5½" | 4'-9 | 2'-3 |
| | 4' | 8" | 8" | #4 | 11" | 4'-9 | #4 | 11" | 10'-3 | 54 | #4 | 11" | 13'-6 | 5'-0 | 2'-3 | 5½" | #5 | 11" | 13'-6 | #5 | 11" | 9'-9 | 20 | 3'-6 | #4 | 5½" | 5'-3 | 2'-3 |
| | 5' | 8" | 8" | #4 | 11" | 5'-9 | #4 | 11" | 12'-3 | 54 | #4 | 11" | 13'-6 | 5'-0 | 2'-3 | 5½" | #5 | 11" | 13'-6 | #5 | 11" | 10'-3 | 20 | 3'-6 | #4 | 5½" | 5'-9 | 2'-3 |
| | 6' | 8" | 8" | #4 | 11" | 6'-9 | #4 | 11" | 14'-3 | 60 | #4 | 11" | 13'-6 | 5'-0 | 2'-3 | 5½" | #5 | 11" | 13'-6 | #5 | 11" | 11'-6 | 20 | 3'-6 | #4 | 5½" | 6'-3 | 2'-3 |
| | 7' | 8" | 8" | #4 | 11" | 7'-9 | #4 | 11" | 16'-3 | 66 | #4 | 11" | 13'-6 | 5'-0 | 2'-3 | 5½" | #5 | 11" | 13'-6 | #5 | 11" | 11'-0 | 20 | 3'-6 | #4 | 5½" | 7'-0 | 2'-6 |
| 8' | 3' | 8½" | 9" | #4 | 12" | 4'-0 | #4 | 6" | 8'-6 | 48 | #5 | 12" | 16'-0 | 5'-7½ | 3'-4 | 6" | #5 | 12" | 17'-9 | #6 | 12" | 10'-0 | 24 | 4'-5 | #5 | 6" | 5'-9 | 3'-1 |
| | 4' | 8½" | 9" | #4 | 12" | 5'-0 | #4 | 6" | 10'-6 | 54 | #5 | 12" | 16'-6 | 5'-10 | 3'-4 | 6" | #6 | 12" | 17'-9 | #6 | 12" | 10'-6 | 28 | 4'-5 | #5 | 6" | 6'-3 | 3'-1 |
| | 5' | 9" | 9" | #4 | 14" | 6'-0 | #4 | 7" | 12'-6 | 54 | #6 | 14" | 16'-6 | 6'-0 | 3'-0 | 6½" | #6 | 14" | 17'-9 | #6 | 14" | 11'-0 | 28 | 4'-8 | #5 | 7" | 6'-6 | 2'-9 |
| | 6' | 9" | 9" | #4 | 14" | 7'-0 | #4 | 7" | 14'-6 | 60 | #6 | 14" | 16'-6 | 6'-0 | 3'-0 | 6½" | #6 | 14" | 17'-9 | #6 | 14" | 11'-6 | 28 | 4'-8 | #5 | 7" | 7'-0 | 2'-9 |
| | 7' | 9" | 9" | #4 | 14" | 8'-0 | #4 | 7" | 16'-6 | 66 | #6 | 14" | 16'-6 | 5'-9½ | 3'-4 | 6½" | #6 | 14" | 17'-9 | #6 | 14" | 12'-0 | 28 | 4'-4 | #5 | 7" | 7'-6 | 2'-9 |
| | 8' | 9" | 9" | #4 | 14" | 9'-0 | #4 | 7" | 18'-6 | 66 | #6 | 14" | 17'-0 | 6'-1 | 3'-4 | 6½" | #6 | 14" | 17'-9 | #6 | 14" | 13'-0 | 28 | 4'-4 | #5 | 7" | 8'-0 | 2'-9 |
| 10' | 3' | 10" | 10" | #4 | 11" | 4'-3 | #5 | 5½" | 9'-0 | 48 | #6 | 11" | 19'-9 | 6'-11 | 4'-2 | 7½" | #5 | 11" | 21'-9 | #6 | 11" | 17'-6 | 32 | 5'-5 | #5 | 5½" | 6'-6 | 3'-9 |
| | 4' | 10½" | 10" | #4 | 11" | 5'-3 | #5 | 5½" | 11'-0 | 54 | #6 | 11" | 19'-9 | 6'-10 | 4'-2 | 8" | #5 | 11" | 21'-9 | #6 | 11" | 17'-6 | 32 | 5'-4 | #5 | 5½" | 7'-0 | 3'-9 |
| | 5' | 10½" | 10" | #4 | 11" | 6'-3 | #6 | 11" | 13'-0 | 54 | #6 | 11" | 20'-3 | 7'-1 | 4'-2 | 8" | #5 | 11" | 21'-9 | #6 | 11" | 18'-0 | 32 | 5'-4 | #5 | 5½" | 7'-3 | 3'-6 |
| | 6' | 10½" | 10" | #4 | 13" | 7'-3 | #5 | 6½" | 15'-0 | 60 | #6 | 13" | 20'-3 | 7'-2 | 4'-0 | 8" | #6 | 13" | 21'-9 | #7 | 13" | 12'-6 | 32 | 5'-6 | #5 | 6½" | 7'-9 | 3'-6 |
| | 7' | 10½" | 10" | #4 | 13" | 8'-3 | #5 | 6½" | 17'-0 | 66 | #6 | 13" | 20'-3 | 7'-2 | 4'-0 | 8" | #6 | 13" | 21'-9 | #7 | 13" | 13'-0 | 32 | 5'-6 | #5 | 6½" | 8'-0 | 3'-3 |
| | 8' | 10½" | 10" | #4 | 13" | 9'-3 | #6 | 13" | 19'-0 | 66 | #6 | 13" | 20'-3 | 7'-2 | 4'-0 | 8" | #6 | 13" | 21'-9 | #7 | 13" | 13'-6 | 32 | 5'-6 | #5 | 6½" | 8'-6 | 3'-3 |
| | 9' | 10½" | 10" | #4 | 13" | 10'-3 | #6 | 13" | 21'-0 | 72 | #6 | 13" | 20'-3 | 7'-2 | 4'-0 | 8" | #6 | 13" | 21'-9 | #7 | 13 | 14'-0 | 32 | 5'-6 | #5 | 6½" | 9'-0 | 3'-3 |
| | 10' | 10½" | 10" | #4 | 13" | 11'-3 | #4 | 6½" | 23'-0 | 78 | #6 | 13" | 20'-3 | 7'-2 | 4'-0 | 8" | #6 | 13" | 21'-9 | #7 | 13" | 15'-0 | 32 | 5'-6 | #5 | 6½" | 9'-6 | 3'-3 |
| 12' | 8' | 12½" | 12" | #4 | 11" | 9'-6 | #5 | 5½" | 20'-0 | 66 | #6 | 11" | 23'-9 | 8'-2 | 5'-0 | 10" | #6 | 11" | 26'-6 | #7 | 11" | 17'-3 | 40 | 6'-4 | #5 | 5½" | 9'-9 | 4'-3 |
| | 9' | 12½" | 12" | #4 | 11" | 10'-6 | #5 | 5½" | 22'-0 | 72 | #6 | 11" | 24'-3 | 8'-5 | 5'-0 | 10" | #6 | 11" | 26'-6 | #7 | 11" | 17'-3 | 40 | 6'-4 | #5 | 5½" | 10'-3 | 4'-3 |
| | 10' | 12½" | 12" | #4 | 12" | 11'-6 | #5 | 6" | 24'-0 | 78 | #7 | 12" | 24'-6 | 8'-6½ | 5'-0 | 10" | #6 | 12" | 26'-6 | #7 | 12" | 17'-3 | 40 | 6'-4 | #5 | 6" | 10'-9 | 4'-3 |
| | 11' | 12½" | 12" | #4 | 12" | 12'-6 | #5 | 6" | 26'-0 | 78 | #7 | 12" | 24'-6 | 8'-6½ | 5'-0 | 10" | #6 | 12" | 26'-6 | #7 | 12 | 17'-3 | 40 | 6'-4 | #5 | 6" | 11'-3 | 4'-3 |
| | 12' | 12½ | 12" | #4 | 12" | 13'-6 | #5 | 6" | 28'-0 | 84 | #7 | 12" | 24'-0 | 8'-3½ | 5'-0 | 10" | #6 | 12" | 26'-6 | #7 | 12" | 17'-3 | 40 | 6'-4 | #5 | 6" | 11'-9 | 4'-3 |

⌖ Total number of bars in the cross-section.

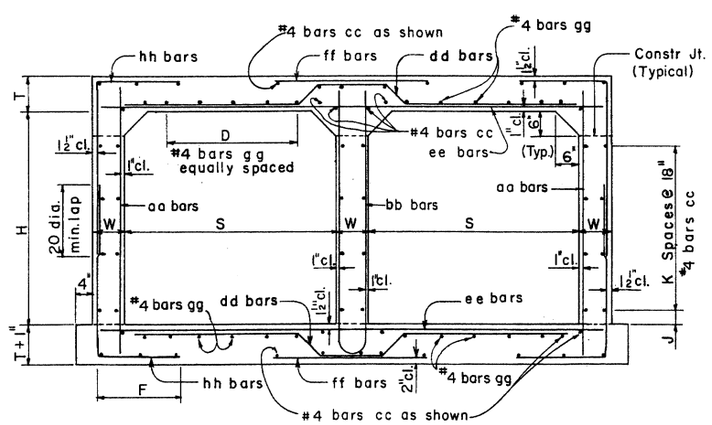


TYPICAL SECTION

| Height "H" | "J" Dim. | "K" Spaces |
|---|---|---|
| 3' | 9" | 1 |
| 4' | 3" | 2 |
| 5' | 12" | 2 |
| 6' | 9" | 3 |
| 7' | 3" | 4 |
| 8' | 12" | 4 |
| 9' | 9" | 5 |
| 10' | 3" | 6 |
| 11' | 12" | 6 |
| 12' | 9" | 7 |

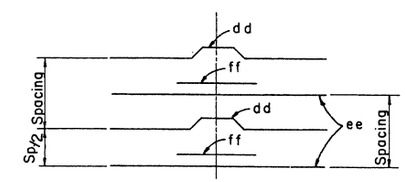


REINFORCING BAR PLACING DIAGRAM

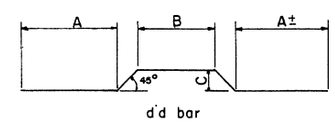


dd bar

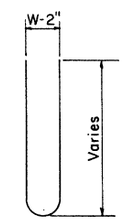


bb bar

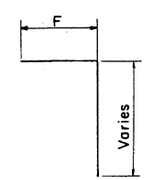


hh bar

BENDS

NOTE:

See B-02.25 for Tables No. II through V.
See B-01.10 for general notes and miscellaneous details.
All bend dimensions are out to out of bar.

| DESIGN | DIV | NO. | DESCRIPTION OF REVISIONS | MADE BY | DATE |
|---|---|---|---|---|---|
| DESIGN | DIV | 12-71 | ① Conc. quantities Table II 6' Span | JTW | 7-76 |
| DRAWN | APV | 7-72 | ② | | |
| CHECKED | NAB | 3-73 | ③ | | |

| DESIGN APPROVED | ARIZONA DEPARTMENT OF TRANSPORTATION HIGHWAYS DIVISION STANDARD PLANS | REVISION |
|---|---|---|
| APPROVED FOR DISTRIBUTION | DOUBLE BARREL BOX CULVERT | STANDARD NO. CB-2 |
| | | PLAN NO. B-02.20 |

## TABLE NO. II
### 10'-15' FILL

| Span "S" | Height "H" | Top Slab "T" | Walls "W" | aa Size | aa Spacing | aa Length | bb Size | bb Spacing | bb Length | cc ⌖ Number | dd Size | dd Spacing | dd Length | dd A | dd B | dd C | ee Size | ee Spacing | ee Length | ff Size | ff Spacing | ff Length | gg ⌖ Number | gg D | hh Size | hh Spacing | hh Length | hh F |
|---|---|---|---|---|---|---|---|---|---|---|---|---|---|---|---|---|---|---|---|---|---|---|---|---|---|---|---|---|
| 6' | 3' | 8" | 8" | #4 | 12" | 3'-9 | #4 | 12" | 8'-0 | 48 | #5 | 12" | 12'-6 | 4'-5 | 2'-6 | 5" | #4 | 12" | 13'-6 | #5 | 12" | 4'-9 | 20 | 3'-4 | #4 | 6" | 4'-3 | 1'-9 |
| | 4' | 8" | 8" | #4 | 12" | 4'-9 | #4 | 12" | 10'-0 | 54 | #5 | 12" | 13'-0 | 4'-8 | 2'-6 | 5" | #4 | 12" | 13'-6 | #5 | 12" | 4'-9 | 20 | 3'-4 | #4 | 6" | 4'-9 | 1'-9 |
| | 5' | 8" | 8" | #4 | 12" | 5'-9 | #4 | 12" | 12'-0 | 54 | #5 | 12" | 13'-0 | 4'-8 | 2'-6 | 5" | #4 | 12" | 13'-6 | #5 | 12" | 4'-9 | 20 | 3'-4 | #4 | 6" | 5'-3 | 1'-9 |
| | 6' | 8" | 8" | #4 | 11" | 6'-9 | #4 | 11" | 14'-0 | 60 | #5 | 11" | 13'-0 | 4'-8 | 2'-6 | 5" | #4 | 11" | 13'-6 | #5 | 11" | 4'-9 | 20 | 3'-4 | #4 | 5½" | 5'-9 | 1'-9 |
| | 7' | 8" | 8" | #4 | 11" | 7'-9 | #4 | 11" | 16'-0 | 66 | #5 | 11" | 13'-0 | 4'-8 | 2'-6 | 5" | #4 | 11" | 13'-6 | #5 | 11" | 4'-9 | 20 | 3'-4 | #4 | 5½" | 6'-3 | 1'-9 |
| 8' | 3' | 10" | 9" | #4 | 12" | 4'-3 | #4 | 12" | 9'-0 | 48 | #6 | 12" | 16'-6 | 5'-10½ | 3'-0 | 7½" | #5 | 12" | 17'-9 | #6 | 12" | 6'-3 | 24 | 4'-6 | #5 | 6" | 5'-0 | 2'-3 |
| | 4' | 10" | 9" | #4 | 12" | 5'-3 | #4 | 12" | 11'-0 | 54 | #6 | 12" | 17'-0 | 6'-1½ | 3'-0 | 7½" | #5 | 12" | 17'-9 | #6 | 12" | 6'-3 | 24 | 4'-6 | #4 | 6" | 5'-3 | 2'-0 |
| | 5' | 10" | 9" | #4 | 12" | 6'-3 | #4 | 12" | 13'-0 | 54 | #6 | 12" | 17'-0 | 6'-1½ | 3'-0 | 7½" | #5 | 12" | 17'-9 | #6 | 12" | 6'-3 | 24 | 4'-6 | #4 | 6" | 5'-9 | 2'-0 |
| | 6' | 10" | 9" | #4 | 12" | 7'-3 | #4 | 12" | 15'-0 | 60 | #6 | 12" | 17'-0 | 6'-1½ | 3'-0 | 7½" | #5 | 12" | 17'-9 | #6 | 12" | 6'-3 | 24 | 4'-6 | #4 | 6" | 6'-3 | 2'-0 |
| | 7' | 10" | 9" | #4 | 12" | 8'-3 | #4 | 12" | 17'-0 | 66 | #6 | 12" | 17'-0 | 6'-1½ | 3'-0 | 7½" | #5 | 12" | 17'-9 | #6 | 12" | 6'-3 | 24 | 4'-6 | #4 | 6" | 6'-9 | 2'-0 |
| | 8' | 10" | 9" | #4 | 12" | 9'-3 | #4 | 12" | 19'-0 | 66 | #6 | 12" | 17'-0 | 6'-1½ | 3'-0 | 7½" | #5 | 12" | 17'-9 | #6 | 12" | 6'-3 | 24 | 4'-6 | #5 | 6" | 7'-6 | 2'-3 |
| 10' | 3' | 12" | 10" | #4 | 11" | 4'-6 | #4 | 11" | 9'-6 | 48 | #6 | 11" | 20'-3 | 7'-3 | 3'-6 | 9½" | #5 | 11" | 21'-9 | #7 | 11" | 7'-6 | 28 | 5'-9 | #5 | 5½" | 5'-3 | 2'-3 |
| | 4' | 12" | 10" | #4 | 11" | 5'-6 | #4 | 11" | 11'-6 | 54 | #6 | 11" | 20'-3 | 7'-3 | 3'-6 | 9½" | #5 | 11" | 21'-9 | #7 | 11" | 7'-6 | 28 | 5'-9 | #5 | 5½" | 5'-9 | 2'-3 |
| | 5' | 12½" | 10" | #4 | 11" | 6'-6 | #4 | 11" | 13'-6 | 54 | #6 | 11" | 20'-9 | 7'-5 | 3'-6 | 10" | #5 | 11" | 21'-9 | #7 | 11" | 7'-6 | 28 | 5'-8 | #5 | 5½" | 6'-3 | 2'-3 |
| | 6' | 12½" | 10" | #4 | 11" | 7'-6 | #4 | 11" | 15'-6 | 60 | #6 | 11" | 20'-9 | 7'-5 | 3'-6 | 10" | #5 | 11" | 21'-9 | #7 | 11" | 7'-6 | 28 | 5'-8 | #4 | 5½" | 6'-9 | 2'-3 |
| | 7' | 12½" | 10" | #4 | 11" | 8'-6 | #4 | 11" | 17'-6 | 66 | #6 | 11" | 20'-9 | 7'-5 | 3'-6 | 10" | #5 | 11" | 21'-9 | #7 | 11" | 7'-6 | 28 | 5'-8 | #4 | 5½" | 7'-3 | 2'-3 |
| | 8' | 12½" | 10" | #4 | 13" | 9'-6 | #4 | 13" | 19'-6 | 66 | #7 | 13" | 21'-3 | 7'-8 | 3'-6 | 10" | #6 | 13" | 21'-9 | #7 | 13" | 7'-6 | 28 | 5'-8 | #5 | 6½" | 7'-9 | 2'-3 |
| | 9' | 12½" | 10" | #4 | 13" | 10'-6 | #4 | 13" | 21'-6 | 72 | #7 | 13" | 21'-3 | 7'-8 | 3'-6 | 10" | #6 | 13" | 21'-9 | #7 | 13" | 7'-6 | 28 | 5'-8 | #5 | 6½" | 8'-3 | 2'-3 |
| | 10' | 12½" | 10" | #4 | 13" | 11'-6 | #4 | 13" | 23'-6 | 78 | #7 | 13" | 21'-3 | 7'-8 | 3'-6 | 10" | #6 | 13" | 21'-9 | #7 | 13" | 7'-6 | 28 | 5'-8 | #5 | 6½" | 9'-0 | 2'-6 |
| 12' | 8' | 15" | 12" | #4 | 11" | 10'-0 | #4 | 11" | 20'-6 | 66 | #6 | 11" | 24'-6 | 8'-6 | 4'-6 | 12½" | #6 | 11" | 26'-6 | #8 | 11" | 9'-0 | 32 | 6'-5 | #5 | 5½" | 8'-3 | 2'-6 |
| | 9' | 15" | 12" | #4 | 11" | 11'-0 | #4 | 11" | 22'-6 | 72 | #6 | 11" | 25'-0 | 8'-9 | 4'-6 | 12½" | #6 | 11" | 26'-6 | #8 | 11" | 9'-0 | 32 | 6'-5 | #5 | 5½" | 8'-9 | 2'-6 |
| | 10' | 15" | 12" | #4 | 11" | 12'-0 | #4 | 11" | 24'-6 | 78 | #6 | 11" | 24'-6 | 8'-6 | 4'-6 | 12½" | #6 | 11" | 26'-6 | #8 | 11" | 9'-0 | 32 | 6'-5 | #5 | 5½" | 9'-6 | 2'-9 |
| | 11' | 15" | 12" | #4 | 11" | 13'-0 | #4 | 11" | 26'-6 | 78 | #6 | 11" | 24'-6 | 8'-6 | 4'-6 | 12½" | #6 | 11" | 26'-6 | #8 | 11" | 9'-0 | 32 | 6'-5 | #5 | 5½" | 10'-0 | 2'-9 |
| | 12' | 15" | 12" | #4 | 11" | 14'-0 | #4 | 11" | 28'-6 | 84 | #6 | 11" | 24'-6 | 8'-6 | 4'-6 | 12½" | #6 | 11" | 26'-6 | #8 | 11" | 9'-0 | 32 | 6'-5 | #5 | 5½" | 10'-9 | 3'-0 |

## TABLE NO. III
### 15'-20' FILL

| Span "S" | Height "H" | Top Slab "T" | Walls "W" | aa Size | aa Spacing | aa Length | bb Size | bb Spacing | bb Length | cc ⌖ Number | dd Size | dd Spacing | dd Length | dd A | dd B | dd C | ee Size | ee Spacing | ee Length | ff Size | ff Spacing | ff Length | gg ⌖ Number | gg D | hh Size | hh Spacing | hh Length | hh F |
|---|---|---|---|---|---|---|---|---|---|---|---|---|---|---|---|---|---|---|---|---|---|---|---|---|---|---|---|---|
| 6' | 3' | 9" | 8" | #4 | 11" | 4'-0 | #4 | 11" | 8'-6 | 48 | #5 | 11" | 13'-0 | 4'-6 | 2'-6 | 6½" | #4 | 11" | 13'-6 | #5 | 11" | 4'-9 | 16 | 3'-1 | #4 | 5½" | 4'-3 | 1'-8 |
| | 4' | 9" | 8" | #4 | 11" | 5'-0 | #4 | 11" | 10'-6 | 54 | #5 | 11" | 13'-0 | 4'-6 | 2'-6 | 6½" | #4 | 11" | 13'-6 | #5 | 11" | 4'-9 | 16 | 3'-1 | #4 | 5½" | 4'-9 | 1'-8 |
| | 5' | 9" | 8" | #4 | 11" | 6'-0 | #4 | 11" | 12'-6 | 54 | #5 | 11" | 13'-0 | 4'-6 | 2'-6 | 6½" | #4 | 11" | 13'-6 | #5 | 11" | 4'-9 | 16 | 3'-1 | #4 | 5½" | 5'-3 | 1'-8 |
| | 6' | 9" | 8" | #4 | 11" | 7'-0 | #4 | 11" | 14'-6 | 60 | #5 | 11" | 13'-0 | 4'-6 | 2'-6 | 6½" | #4 | 11" | 13'-6 | #5 | 11" | 4'-9 | 16 | 3'-1 | #4 | 5½" | 5'-9 | 1'-8 |
| | 7' | 9" | 8" | #4 | 11" | 8'-0 | #4 | 11" | 16'-6 | 66 | #5 | 11" | 13'-0 | 4'-6 | 2'-6 | 6½" | #4 | 11" | 13'-6 | #5 | 11" | 4'-9 | 16 | 3'-1 | #4 | 5½" | 6'-3 | 1'-8 |
| 8' | 3' | 11½" | 9" | #4 | 12" | 4'-6 | #4 | 12" | 9'-6 | 48 | #6 | 12" | 17'-0 | 5'-11½ | 3'-0 | 9" | #5 | 12" | 17'-9 | #6 | 12" | 6'-3 | 24 | 4'-3 | #4 | 6" | 4'-6 | 1'-9 |
| | 4' | 11½" | 9" | #4 | 12" | 5'-6 | #4 | 12" | 11'-6 | 54 | #6 | 12" | 17'-0 | 5'-11½ | 3'-0 | 9" | #5 | 12" | 17'-9 | #6 | 12" | 6'-3 | 24 | 4'-3 | #4 | 6" | 5'-0 | 1'-9 |
| | 5' | 11½" | 9" | #4 | 13" | 6'-6 | #4 | 13" | 13'-6 | 54 | #6 | 13" | 17'-0 | 5'-11½ | 3'-0 | 9" | #5 | 13" | 17'-9 | #7 | 13" | 6'-6 | 24 | 4'-3 | #5 | 6½" | 6'-0 | 2'-0 |
| | 6' | 11½" | 9" | #4 | 13" | 7'-6 | #4 | 13" | 15'-6 | 60 | #6 | 13" | 17'-0 | 5'-11½ | 3'-0 | 9" | #5 | 13" | 17'-9 | #7 | 13" | 6'-6 | 24 | 4'-3 | #5 | 6½" | 6'-6 | 2'-0 |
| | 7' | 11½" | 9" | #4 | 13" | 8'-6 | #4 | 13" | 17'-6 | 66 | #6 | 13" | 17'-0 | 5'-11½ | 3'-0 | 9" | #5 | 13" | 17'-9 | #7 | 13" | 6'-6 | 24 | 4'-3 | #5 | 6½" | 7'-0 | 2'-0 |
| | 8' | 11½" | 9" | #4 | 13" | 9'-6 | #4 | 13" | 19'-6 | 66 | #6 | 13" | 17'-0 | 6'-2½ | 2'-6 | 9" | #5 | 13" | 17'-9 | #7 | 13" | 6'-6 | 24 | 4'-9 | #5 | 6½" | 7'-9 | 2'-4 |
| 10' | 3' | 14½" | 10" | #4 | 13" | 5'-0 | #4 | 13" | 10'-6 | 48 | #6 | 13" | 20'-9 | 7'-5½ | 3'-0 | 1'-0 | #6 | 13" | 21'-9 | #8 | 13" | 7'-9 | 28 | 5'-10 | #5 | 6½" | 5'-3 | 2'-0 |
| | 4' | 14½" | 10" | #4 | 13" | 6'-0 | #4 | 13" | 12'-6 | 54 | #6 | 13" | 20'-9 | 7'-5½ | 3'-0 | 1'-0 | #6 | 13" | 21'-9 | #8 | 13" | 7'-9 | 28 | 5'-10 | #5 | 6½" | 5'-9 | 2'-0 |
| | 5' | 15" | 10" | #4 | 13" | 7'-0 | #4 | 13" | 14'-6 | 54 | #6 | 13" | 21'-6 | 7'-9 | 3'-0 | 1'-0½ | #6 | 13" | 21'-9 | #8 | 13" | 7'-9 | 28 | 5'-9 | #5 | 6½" | 6'-3 | 2'-0 |
| | 6' | 15" | 10" | #4 | 13" | 8'-0 | #4 | 13" | 16'-6 | 60 | #6 | 13" | 21'-6 | 7'-9 | 3'-0 | 1'-0½ | #6 | 13" | 21'-9 | #8 | 13" | 7'-9 | 28 | 5'-9 | #5 | 6½" | 6'-9 | 2'-0 |
| | 7' | 15" | 10" | #4 | 13" | 9'-0 | #4 | 13" | 18'-6 | 66 | #6 | 13" | 21'-6 | 7'-9 | 3'-0 | 1'-0½ | #6 | 13" | 21'-9 | #8 | 13" | 7'-9 | 28 | 5'-9 | #5 | 6½" | 7'-3 | 2'-0 |
| | 8' | 15" | 10" | #4 | 13" | 10'-0 | #4 | 13" | 20'-6 | 66 | #6 | 13" | 21'-6 | 7'-9 | 3'-0 | 1'-0½ | #6 | 13" | 21'-9 | #8 | 13" | 7'-9 | 28 | 5'-9 | #5 | 6½" | 7'-9 | 2'-0 |
| | 9' | 15" | 10" | #4 | 13" | 11'-0 | #4 | 13" | 22'-6 | 72 | #6 | 13" | 21'-0 | 7'-6 | 3'-0 | 1'-0½ | #6 | 13" | 21'-9 | #8 | 13" | 7'-9 | 28 | 5'-9 | #5 | 6½" | 8'-6 | 2'-4 |
| | 10' | 15" | 10" | #4 | 12" | 12'-0 | #4 | 12" | 24'-6 | 78 | #6 | 12" | 21'-0 | 7'-6 | 3'-0 | 1'-0½ | #6 | 12" | 21'-9 | #8 | 12" | 7'-9 | 28 | 5'-9 | #5 | 6" | 9'-0 | 2'-4 |
| 12' | 8' | 18" | 12" | #4 | 12" | 10'-6 | #4 | 12" | 21'-6 | 66 | #7 | 12" | 25'-6 | 8'-11 | 4'-0 | 1'-3½ | #6 | 12" | 26'-6 | #8 | 12" | 9'-0 | 32 | 6'-5 | #5 | 6" | 8'-3 | 2'-4 |
| | 9' | 18" | 12" | #4 | 12" | 11'-6 | #4 | 12" | 23'-6 | 72 | #7 | 12" | 25'-6 | 8'-11 | 4'-0 | 1'-3½ | #6 | 12" | 26'-6 | #8 | 12" | 9'-0 | 32 | 6'-5 | #5 | 6" | 9'-0 | 2'-6 |
| | 10' | 18" | 12" | #4 | 12" | 12'-6 | #4 | 12" | 25'-6 | 78 | #7 | 12" | 25'-6 | 8'-11 | 4'-0 | 1'-3½ | #6 | 12" | 26'-6 | #8 | 12" | 9'-0 | 32 | 6'-5 | #5 | 6" | 9'-6 | 2'-6 |
| | 11' | 18" | 12" | #4 | 12" | 13'-6 | #4 | 12" | 27'-6 | 78 | #7 | 12" | 25'-6 | 8'-11 | 4'-0 | 1'-3½ | #6 | 12" | 26'-6 | #8 | 12" | 9'-0 | 32 | 6'-5 | #5 | 6" | 10'-0 | 2'-6 |
| | 12' | 18" | 12" | #5 | 12" | 14'-6 | #4 | 12" | 29'-6 | 84 | #7 | 12" | 25'-6 | 8'-11 | 4'-0 | 1'-3½ | #6 | 12" | 26'-6 | #8 | 12" | 9'-0 | 32 | 6'-5 | #6 | 6" | 11'-0 | 3'-0 |

## TABLE NO. IV
### 20'-25' FILL

| Span "S" | Height "H" | Top Slab "T" | Walls "W" | aa Size | aa Spacing | aa Length | bb Size | bb Spacing | bb Length | cc ⌖ Number | dd Size | dd Spacing | dd Length | dd A | dd B | dd C | ee Size | ee Spacing | ee Length | ff Size | ff Spacing | ff Length | gg ⌖ Number | gg D | hh Size | hh Spacing | hh Length | hh F |
|---|---|---|---|---|---|---|---|---|---|---|---|---|---|---|---|---|---|---|---|---|---|---|---|---|---|---|---|---|
| 6' | 3' | 10½" | 8" | #4 | 11" | 4'-3 | #4 | 11" | 9'-0 | 48 | #5 | 11" | 13'-9 | 4'-8 | 2'-6 | 8" | #4 | 11" | 13'-6 | #5 | 11" | 5'-3 | 16 | 2'-10 | #4 | 5½" | 4'-3 | 1'-6 |
| | 4' | 10½" | 8" | #4 | 11" | 5'-3 | #4 | 11" | 11'-0 | 54 | #5 | 11" | 13'-9 | 4'-8 | 2'-6 | 8" | #4 | 11" | 13'-6 | #5 | 11" | 5'-3 | 16 | 2'-10 | #4 | 5½" | 4'-9 | 1'-6 |
| | 5' | 10½" | 8" | #4 | 11" | 6'-3 | #4 | 11" | 13'-0 | 54 | #5 | 11" | 13'-9 | 4'-8 | 2'-6 | 8" | #4 | 11" | 13'-6 | #5 | 11" | 5'-3 | 16 | 2'-10 | #4 | 5½" | 5'-3 | 1'-6 |
| | 6' | 10½" | 8" | #4 | 11" | 7'-3 | #4 | 11" | 15'-0 | 60 | #5 | 11" | 13'-9 | 4'-8 | 2'-6 | 8" | #4 | 11" | 13'-6 | #5 | 11" | 4'-9 | 16 | 2'-10 | #4 | 5½" | 6'-0 | 1'-9 |
| | 7' | 10½" | 8" | #4 | 11" | 8'-3 | #4 | 11" | 17'-0 | 66 | #5 | 11" | 13'-9 | 4'-8 | 2'-6 | 8" | #4 | 11" | 13'-6 | #5 | 11" | 4'-9 | 16 | 2'-10 | #4 | 5½" | 6'-6 | 1'-9 |
| 8' | 3' | 13½" | 9" | #4 | 11" | 4'-9 | #4 | 11" | 10'-0 | 48 | #5 | 11" | 17'-6 | 6'-0 | 3'-0 | 11" | #5 | 11" | 17'-9 | #7 | 11" | 6'-6 | 20 | 3'-11 | #4 | 5½" | 4'-6 | 1'-6 |
| | 4' | 13½" | 9" | #4 | 11" | 5'-9 | #4 | 11" | 12'-0 | 54 | #5 | 11" | 17'-6 | 6'-0 | 3'-0 | 11" | #5 | 11" | 17'-9 | #7 | 11" | 6'-6 | 20 | 3'-11 | #4 | 5½" | 5'-0 | 1'-6 |
| | 5' | 13½" | 9" | #4 | 11" | 6'-9 | #4 | 11" | 14'-0 | 54 | #5 | 11" | 17'-6 | 6'-0 | 3'-0 | 11" | #5 | 11" | 17'-9 | #7 | 11" | 6'-6 | 20 | 3'-11 | #4 | 5½" | 5'-6 | 1'-6 |
| | 6' | 13½" | 9" | #4 | 11" | 7'-9 | #4 | 11" | 16'-0 | 60 | #5 | 11" | 17'-6 | 6'-0 | 3'-0 | 11" | #5 | 11" | 17'-9 | #7 | 11" | 6'-6 | 20 | 3'-11 | #4 | 5½" | 6'-3 | 1'-9 |
| | 7' | 13½" | 9" | #4 | 11" | 8'-9 | #4 | 11" | 18'-0 | 66 | #5 | 11" | 17'-6 | 6'-0 | 3'-0 | 11" | #5 | 11" | 17'-9 | #7 | 11" | 6'-6 | 20 | 3'-11 | #4 | 5½" | 6'-9 | 1'-9 |
| | 8' | 13½" | 9" | #4 | 12" | 9'-9 | #4 | 12" | 20'-0 | 66 | #5 | 12" | 17'-6 | 6'-0 | 3'-0 | 11" | #5 | 12" | 17'-9 | #7 | 12" | 6'-6 | 20 | 3'-11 | #5 | 6" | 7'-3 | 1'-9 |
| 10' | 3' | 16½" | 10" | #4 | 12" | 5'-3 | #4 | 12" | 11'-0 | 48 | #6 | 12" | 21'-6 | 7'-7½ | 3'-0 | 1'-2 | #6 | 12" | 21'-9 | #8 | 12" | 7'-9 | 28 | 5'-6 | #5 | 6" | 5'-0 | 1'-9 |
| | 4' | 17" | 10" | #4 | 12" | 6'-3 | #4 | 12" | 13'-0 | 54 | #6 | 12" | 21'-9 | 7'-8 | 3'-0 | 1'-2½ | #6 | 12" | 21'-9 | #8 | 12" | 7'-9 | 28 | 5'-5 | #4 | 6" | 5'-6 | 1'-9 |
| | 5' | 17" | 10" | #4 | 12" | 7'-3 | #4 | 12" | 15'-0 | 54 | #6 | 12" | 21'-9 | 7'-8 | 3'-0 | 1'-2½ | #6 | 12" | 21'-9 | #8 | 12" | 7'-9 | 28 | 5'-5 | #4 | 6" | 6'-0 | 1'-9 |
| | 6' | 17" | 10" | #4 | 12" | 8'-3 | #4 | 12" | 17'-0 | 60 | #6 | 12" | 21'-9 | 7'-8 | 3'-0 | 1'-2½ | #6 | 12" | 21'-9 | #8 | 12" | 7'-9 | 28 | 5'-5 | #4 | 6" | 6'-6 | 1'-9 |
| | 7' | 17" | 10" | #4 | 12" | 9'-3 | #4 | 12" | 19'-0 | 66 | #6 | 12" | 21'-9 | 7'-8 | 3'-0 | 1'-2½ | #6 | 12" | 21'-9 | #8 | 12" | 7'-9 | 28 | 5'-5 | #4 | 6" | 7'-3 | 2'-0 |
| | 8' | 17" | 10" | #4 | 12" | 10'-3 | #4 | 12" | 21'-0 | 66 | #6 | 12" | 21'-9 | 7'-8 | 3'-0 | 1'-2½ | #6 | 12" | 21'-9 | #8 | 12" | 7'-9 | 28 | 5'-5 | #5 | 6" | 8'-0 | 2'-0 |
| | 9' | 17" | 10" | #4 | 12" | 11'-3 | #4 | 12" | 23'-0 | 72 | #6 | 12" | 21'-9 | 7'-8 | 3'-0 | 1'-2½ | #6 | 12" | 21'-9 | #8 | 12" | 7'-9 | 28 | 5'-5 | #5 | 6" | 8'-6 | 2'-0 |
| | 10' | 17" | 10" | #5 | 12" | 12'-3 | #4 | 12" | 25'-0 | 78 | #6 | 12" | 21'-3 | 7'-5 | 3'-0 | 1'-2½ | #6 | 12" | 21'-9 | #8 | 12" | 7'-9 | 28 | 5'-5 | #5 | 6" | 9'-0 | 2'-3 |
| 12' | 8' | 20½" | 12" | #4 | 15" | 11'-0 | #4 | 15" | 22'-6 | 66 | #6 | 10" | 25'-9 | 8'-9 | 4'-0 | 1'-6 | #6 | 10" | 26'-6 | #8 | 10" | 9'-0 | 28 | 6'-0 | #4 | 5" | 8'-3 | 2'-2 |
| | 9' | 20½" | 12" | #4 | 15" | 12'-0 | #4 | 15" | 24'-6 | 72 | #6 | 10" | 25'-9 | 8'-9 | 4'-0 | 1'-6 | #6 | 10" | 26'-6 | #8 | 10" | 9'-0 | 28 | 6'-0 | #5 | 5" | 9'-0 | 2'-4 |
| | 10' | 20½" | 12" | #4 | 10" | 13'-0 | #4 | 15" | 26'-6 | 78 | #6 | 10" | 25'-9 | 8'-9 | 4'-0 | 1'-6 | #6 | 10" | 26'-6 | #8 | 10" | 9'-0 | 28 | 6'-0 | #5 | 5" | 9'-9 | 2'-6 |
| | 11' | 20½" | 12" | #4 | 10" | 14'-0 | #4 | 15" | 28'-6 | 78 | #6 | 10" | 25'-3 | 8'-6 | 4'-0 | 1'-6 | #6 | 10" | 26'-6 | #8 | 10" | 9'-0 | 28 | 6'-0 | #5 | 5" | 10'-3 | 2'-6 |
| | 12' | 20½" | 12" | #5 | 10" | 15'-0 | #4 | 15" | 30'-6 | 84 | #6 | 10" | 25'-3 | 8'-6 | 4'-0 | 1'-6 | #6 | 10" | 26'-6 | #8 | 10" | 9'-0 | 28 | 6'-0 | #5 | 5" | 11'-0 | 2'-9 |

⌖ Total number of bars in cross-section.

## TABLE NO. V
### 25'-30' FILL

| Span "S" | Height "H" | Top Slab "T" | Walls "W" | aa Size | aa Spacing | aa Length | bb Size | bb Spacing | bb Length | cc ⌖ Number | dd Size | dd Spacing | dd Length | dd A | dd B | dd C | ee Size | ee Spacing | ee Length | ff Size | ff Spacing | ff Length | gg ⌖ Number | gg D | hh Size | hh Spacing | hh Length | hh F |
|---|---|---|---|---|---|---|---|---|---|---|---|---|---|---|---|---|---|---|---|---|---|---|---|---|---|---|---|---|
| 6' | 3' | 11½" | 8" | #4 | 15" | 4'-6 | #4 | 15" | 9'-6 | 48 | #5 | 10" | 14'-0 | 4'-11 | 2'-0 | 9" | #4 | 10" | 13'-6 | #5 | 10" | 5'-3 | 16 | 3'-2 | #4 | 5" | 4'-3 | 1'-6 |
| | 4' | 11½" | 8" | #4 | 15" | 5'-6 | #4 | 15" | 11'-6 | 54 | #5 | 10" | 14'-0 | 4'-11 | 2'-0 | 9" | #4 | 10" | 13'-6 | #5 | 10" | 5'-3 | 16 | 3'-2 | #4 | 5" | 4'-9 | 1'-6 |
| | 5' | 11½" | 8" | #4 | 15" | 6'-6 | #4 | 15" | 13'-6 | 54 | #5 | 10" | 14'-0 | 4'-11 | 2'-0 | 9" | #4 | 10" | 13'-6 | #5 | 10" | 5'-3 | 16 | 3'-2 | #4 | 5" | 5'-3 | 1'-6 |
| | 6' | 11½" | 8" | #4 | 15" | 7'-6 | #4 | 15" | 15'-6 | 60 | #5 | 10" | 14'-0 | 4'-11 | 2'-0 | 9" | #4 | 10" | 13'-6 | #5 | 10" | 4'-9 | 16 | 3'-2 | #4 | 5" | 6'-0 | 1'-9 |
| | 7' | 11½" | 8" | #4 | 10" | 8'-6 | #4 | 15" | 17'-6 | 66 | #5 | 10" | 14'-0 | 4'-11 | 2'-0 | 9" | #4 | 10" | 13'-6 | #5 | 10" | 4'-9 | 16 | 3'-2 | #4 | 5" | 6'-6 | 1'-9 |
| 8' | 3' | 15½" | 9" | #4 | 11" | 5'-0 | #4 | 11" | 10'-9 | 48 | #5 | 11" | 17'-9 | 5'-10 | 3'-0 | 1'-1 | #5 | 11" | 17'-9 | #7 | 11" | 7'-0 | 20 | 3'-7 | #4 | 5½" | 4'-9 | 1'-8 |
| | 4' | 15½" | 9" | #4 | 11" | 6'-0 | #4 | 11" | 12'-9 | 54 | #5 | 11" | 17'-9 | 5'-10 | 3'-0 | 1'-1 | #5 | 11" | 17'-9 | #7 | 11" | 7'-0 | 20 | 3'-7 | #4 | 5½" | 5'-3 | 1'-8 |
| | 5' | 15½" | 9" | #4 | 11" | 7'-0 | #4 | 11" | 14'-9 | 54 | #5 | 11" | 17'-9 | 5'-10 | 3'-0 | 1'-1 | #5 | 11" | 17'-9 | #7 | 11" | 6'-6 | 20 | 3'-7 | #4 | 5½" | 5'-9 | 1'-8 |
| | 6' | 15½" | 9" | #4 | 11" | 8'-0 | #4 | 11" | 16'-9 | 60 | #5 | 11" | 17'-9 | 5'-10 | 3'-0 | 1'-1 | #5 | 11" | 17'-9 | #7 | 11" | 6'-6 | 20 | 3'-7 | #4 | 5½" | 6'-3 | 1'-8 |
| | 7' | 15½" | 9" | #4 | 11" | 9'-0 | #4 | 11" | 18'-9 | 66 | #5 | 11" | 17'-9 | 5'-10 | 3'-0 | 1'-1 | #5 | 11" | 17'-9 | #7 | 11" | 6'-6 | 20 | 3'-7 | #4 | 5½" | 7'-0 | 1'-10 |
| | 8' | 15½" | 9" | #4 | 11" | 10'-0 | #4 | 11" | 20'-9 | 66 | #5 | 11" | 17'-9 | 5'-10 | 3'-0 | 1'-1 | #5 | 11" | 17'-9 | #7 | 11" | 6'-6 | 20 | 3'-7 | #5 | 5½" | 7'-9 | 2'-0 |
| 10' | 3' | 19" | 10" | #4 | 11" | 5'-9 | #4 | 11" | 11'-9 | 48 | #6 | 11" | 21'-9 | 7'-5 | 3'-0 | 1'-4½ | #6 | 11" | 21'-9 | #8 | 11" | 7'-9 | 24 | 5'-1 | #4 | 5½" | 5'-0 | 1'-7 |
| | 4' | 19" | 10" | #4 | 11" | 6'-9 | #4 | 11" | 13'-9 | 54 | #6 | 11" | 21'-9 | 7'-5 | 3'-0 | 1'-4½ | #6 | 11" | 21'-9 | #8 | 11" | 7'-9 | 24 | 5'-1 | #4 | 5½" | 5'-6 | 1'-7 |
| | 5' | 19" | 10" | #4 | 11" | 7'-9 | #4 | 11" | 15'-9 | 54 | #6 | 11" | 21'-9 | 7'-5 | 3'-0 | 1'-4½ | #6 | 11" | 21'-9 | #8 | 11" | 7'-9 | 24 | 5'-1 | #4 | 5½" | 6'-0 | 1'-7 |
| | 6' | 19" | 10" | #4 | 11" | 8'-9 | #4 | 11" | 17'-9 | 60 | #6 | 11" | 21'-9 | 7'-5 | 3'-0 | 1'-4½ | #6 | 11" | 21'-9 | #8 | 11" | 7'-9 | 24 | 5'-1 | #4 | 5½" | 6'-6 | 1'-7 |
| | 7' | 19" | 10" | #4 | 11" | 9'-9 | #4 | 11" | 19'-9 | 66 | #6 | 11" | 21'-9 | 7'-5 | 3'-0 | 1'-4½ | #6 | 11" | 21'-9 | #8 | 11" | 7'-9 | 24 | 5'-1 | #4 | 5½" | 7'-0 | 1'-7 |
| | 8' | 19" | 10" | #4 | 13" | 10'-9 | #4 | 13" | 21'-9 | 66 | #7 | 13" | 22'-0 | 7'-8 | 3'-0 | 1'-4½ | #6 | 13" | 21'-9 | #8 | 13" | 7'-9 | 24 | 5'-1 | #5 | 6½" | 8'-0 | 2'-0 |
| | 9' | 19" | 10" | #5 | 13" | 11'-9 | #4 | 13" | 23'-9 | 72 | #7 | 13" | 22'-0 | 7'-8 | 3'-0 | 1'-4½ | #6 | 13" | 21'-9 | #8 | 13" | 7'-9 | 24 | 5'-1 | #5 | 6½" | 8'-6 | 2'-0 |
| | 10' | 19" | 10" | #5 | 11" | 12'-9 | #4 | 11" | 25'-9 | 78 | #6 | 11" | 21'-9 | 7'-5 | 3'-0 | 1'-4½ | #6 | 11" | 21'-9 | #8 | 11" | 7'-9 | 24 | 5'-1 | #5 | 5½" | 9'-3 | 2'-3 |
| 12' | 8' | 23" | 12" | #4 | 10" | 11'-3 | #4 | 15" | 23'-0 | 66 | #6 | 10" | 26'-0 | 8'-7 | 4'-0 | 1'-8½ | #6 | 10" | 26'-6 | #8 | 10" | 9'-0 | 28 | 5'-7 | #4 | 5" | 8'-3 | 2'-0 |
| | 9' | 23" | 12" | #4 | 10" | 12'-3 | #4 | 15" | 25'-0 | 72 | #6 | 10" | 26'-0 | 8'-7 | 4'-0 | 1'-8½ | #6 | 10" | 26'-6 | #8 | 10" | 9'-0 | 28 | 5'-7 | #5 | 5" | 9'-3 | 2'-4 |
| | 10' | 23" | 12" | #4 | 10" | 13'-3 | #4 | 15" | 27'-0 | 78 | #6 | 10" | 26'-0 | 8'-7 | 4'-0 | 1'-8½ | #6 | 10" | 26'-6 | #8 | 10" | 9'-0 | 28 | 5'-7 | #5 | 5" | 9'-9 | 2'-4 |
| | 11' | 23" | 12" | #5 | 10" | 14'-3 | #4 | 15" | 29'-0 | 78 | #6 | 10" | 26'-0 | 8'-7 | 4'-0 | 1'-8½ | #6 | 10" | 26'-6 | #8 | 10" | 9'-0 | 28 | 5'-7 | #5 | 5" | 10'-6 | 2'-8 |
| | 12' | 23" | 12" | #6 | 10" | 15'-3 | #4 | 15" | 31'-0 | 84 | #6 | 10" | 25'-6 | 8'-4 | 4'-0 | 1'-8½ | #6 | 10" | 26'-6 | #8 | 10" | 9'-0 | 28 | 5'-7 | #5 | 5" | 11'-0 | 2'-8 |

NOTE:

See B-02.20 for Table No. I, typical section, steel call outs, bend diagrams and quantities.

See B-01.10 for general notes and miscellaneous details.

| | DHY | 12-71 | NO | DESCRIPTION OF REVISIONS | MADE BY | DATE |
|---|---|---|---|---|---|---|
| DESIGN | | | | | | |
| DRAWN | F.D.L. | 9-72 | ① | Table II, 6' span, T now 8" | J.T.W. | 7-76 |
| CHECKED | N.A.B. | 3-73 | ② | | | |
| | | | ③ | | | |

DESIGN APPROVED

APPROVED FOR DISTRIBUTION

ARIZONA
DEPARTMENT OF TRANSPORTATION
HIGHWAYS DIVISION
STANDARD PLANS

DOUBLE BARREL
BOX CULVERT

REVISION

STANDARD NO. CB-2A

PLAN NO. B-02.25

## QUANTITIES PER LIN. FOOT OF BARRELS

| Span "S" | Height "H" | Table I Concrete C.Y. | Table I Reinf. Steel Lbs. | Table II Concrete C.Y. | Table II Reinf. Steel Lbs. | Table III Concrete C.Y. | Table III Reinf. Steel Lbs. | Table IV Concrete C.Y. | Table IV Reinf. Steel Lbs. | Table V Concrete C.Y. | Table V Reinf. Steel Lbs. |
|---|---|---|---|---|---|---|---|---|---|---|---|
| 6' | 3' | 1.427 | 238.4 | 1.427 | 191.4 | 1.557 | 201.7 | 1.751 | 206.7 | 1.881 | 215.0 |
| | 4' | 1.526 | 244.2 | 1.526 | 204.5 | 1.655 | 214.3 | 1.850 | 219.4 | 1.979 | 227.4 |
| | 5' | 1.624 | 251.5 | 1.624 | 211.2 | 1.754 | 221.6 | 1.949 | 226.7 | 2.078 | 233.2 |
| | 6' | 1.723 | 264.2 | 1.723 | 236.6 | 1.853 | 234.2 | 2.047 | 238.5 | 2.177 | 244.0 |
| | 7' | 1.822 | 276.8 | 1.822 | 249.2 | 1.952 | 246.9 | 2.146 | 251.1 | 2.276 | 260.3 |
| 8' | 3' | 1.881 | 328.6 | 2.134 | 299.8 | 2.387 | 284.7 | 2.724 | 292.9 | 3.062 | 300.9 |
| | 4' | 1.992 | 373.7 | 2.245 | 297.0 | 2.498 | 296.7 | 2.835 | 305.5 | 3.173 | 313.5 |
| | 5' | 2.187 | 361.5 | 2.356 | 303.7 | 2.609 | 319.3 | 2.947 | 312.8 | 3.284 | 316.3 |
| | 6' | 2.298 | 376.2 | 2.467 | 315.7 | 2.720 | 332.2 | 3.058 | 326.9 | 3.395 | 329.0 |
| | 7' | 2.409 | 390.8 | 2.578 | 327.7 | 2.831 | 345.0 | 3.169 | 339.6 | 3.506 | 343.0 |
| | 8' | 2.521 | 401.4 | 2.689 | 358.3 | 2.942 | 354.5 | 3.280 | 346.5 | 3.617 | 377.1 |
| 10' | 3' | 2.581 | 461.2 | 2.997 | 387.1 | 3.516 | 390.4 | 3.932 | 418.7 | 4.452 | 432.3 |
| | 4' | 2.809 | 481.6 | 3.120 | 401.4 | 3.640 | 403.3 | 4.159 | 415.7 | 4.575 | 445.0 |
| | 5' | 2.932 | 481.0 | 3.348 | 412.0 | 3.867 | 412.9 | 4.283 | 422.4 | 4.699 | 452.3 |
| | 6' | 3.056 | 502.6 | 3.471 | 404.1 | 3.991 | 425.8 | 4.406 | 434.4 | 4.822 | 464.9 |
| | 7' | 3.179 | 520.7 | 3.595 | 416.8 | 4.114 | 438.7 | 4.530 | 447.8 | 4.945 | 477.5 |
| | 8' | 3.302 | 513.0 | 3.718 | 456.9 | 4.238 | 446.2 | 4.653 | 479.8 | 5.069 | 483.7 |
| | 9' | 3.426 | 529.0 | 3.842 | 469.8 | 4.361 | 459.7 | 4.777 | 493.3 | 5.192 | 504.7 |
| | 10' | 3.549 | 537.9 | 3.965 | 484.6 | 4.485 | 503.6 | 4.900 | 514.5 | 5.316 | 555.2 |
| 12' | 8' | 4.451 | 702.0 | 5.073 | 572.7 | 5.820 | 581.4 | 6.442 | 580.1 | 7.065 | 587.9 |
| | 9' | 4.599 | 724.1 | 5.221 | 588.6 | 5.968 | 597.0 | 6.591 | 625.9 | 7.213 | 636.7 |
| | 10' | 4.747 | 734.1 | 5.369 | 603.5 | 6.116 | 610.5 | 6.739 | 648.9 | 7.361 | 650.8 |
| | 11' | 4.895 | 747.9 | 5.517 | 612.5 | 6.264 | 618.7 | 6.887 | 655.9 | 7.509 | 674.8 |
| | 12' | 5.043 | 765.1 | 5.666 | 629.0 | 6.413 | 647.2 | 7.035 | 686.0 | 7.657 | 704.8 |

## TABLE NO. I
## 0'-10' FILL

| Span "S" | Height "H" | Top Slab "T" | Walls "W" | aa Size | aa Spacing | aa Length | bb Size | bb Spacing | bb Length | cc Number ⌖ | dd Size | dd Spacing | dd Length | dd A | dd B | dd C | dd D | ee Size | ee Spacing | ee Length | ff Size | ff Spacing | ff Length | gg Number ⌖ | hh Size | hh Spacing | hh Length | hh F |
|---|---|---|---|---|---|---|---|---|---|---|---|---|---|---|---|---|---|---|---|---|---|---|---|---|---|---|---|---|
| 6' | 3' | 8" | 8" | #4 | 11" | 3'-9 | #5 | 11" | 8'-3 | 68 | #4 | 11" | 20'-9 | 5'-1 | 2'-3 | 5½" | 3'-6 | #5 | 11" | 20'-3 | #5 | 11" | 14'-6 | 30 | #4 | 5½" | 6'-9 | 4'-2 |
| | 4' | 8" | 8" | #4 | 11" | 4'-9 | #4 | 11" | 10'-3 | 76 | #4 | 11" | 20'-9 | 5'-1 | 2'-3 | 5½" | 3'-6 | #5 | 11" | 20'-3 | #5 | 11" | 14'-6 | 30 | #4 | 5½" | 7'-3 | 4'-2 |
| | 5' | 8" | 8" | #4 | 11" | 5'-9 | #4 | 11" | 12'-3 | 76 | #4 | 11" | 20'-9 | 5'-1 | 2'-3 | 5½" | 3'-6 | #5 | 11" | 20'-3 | #5 | 11" | 14'-6 | 30 | #4 | 5½" | 7'-9 | 4'-2 |
| | 6' | 8" | 8" | #4 | 11" | 6'-9 | #4 | 11" | 14'-3 | 84 | #4 | 11" | 20'-9 | 5'-1 | 2'-3 | 5½" | 3'-6 | #5 | 11" | 20'-3 | #5 | 11" | 14'-6 | 30 | #4 | 5½" | 8'-3 | 4'-2 |
| | 7' | 8" | 8" | #4 | 11" | 7'-9 | #4 | 11" | 16'-3 | 92 | #4 | 11" | 20'-9 | 5'-1 | 2'-3 | 5½" | 3'-6 | #5 | 11" | 20'-3 | #5 | 11" | 14'-6 | 30 | #4 | 5½" | 8'-9 | 4'-2 |
| 8' | 3' | 8½" | 9" | #4 | 12" | 4'-0 | #4 | 6" | 8'-6 | 68 | #5 | 12" | 25'-3 | 5'-8 | 3'-4 | 6" | 4'-5 | #5 | 12" | 26'-6 | #6 | 12" | 18'-9 | 36 | #5 | 6" | 8'-0 | 5'-3 |
| | 4' | 8½" | 9" | #4 | 12" | 5'-0 | #4 | 6" | 10'-6 | 76 | #5 | 12" | 25'-6 | 5'-9½ | 3'-4 | 6" | 4'-5 | #6 | 12" | 26'-6 | #6 | 12" | 18'-9 | 42 | #5 | 6" | 8'-6 | 5'-3 |
| | 5' | 9" | 9" | #4 | 14" | 6'-0 | #4 | 7" | 12'-6 | 76 | #6 | 14" | 25'-9 | 6'-0 | 3'-0 | 6½" | 4'-8 | #6 | 14" | 26'-6 | #6 | 14" | 18'-9 | 42 | #5 | 7" | 9'-0 | 5'-3 |
| | 6' | 9" | 9" | #4 | 14" | 7'-0 | #4 | 7" | 14'-6 | 84 | #6 | 14" | 25'-9 | 6'-0 | 3'-0 | 6½" | 4'-8 | #6 | 14" | 26'-6 | #6 | 14" | 18'-9 | 42 | #5 | 7" | 9'-6 | 5'-3 |
| | 7' | 9" | 9" | #4 | 14" | 8'-0 | #4 | 7" | 16'-6 | 92 | #6 | 14" | 25'-9 | 5'-10 | 3'-4 | 6½" | 4'-4 | #6 | 14" | 26'-6 | #6 | 14" | 18'-9 | 42 | #5 | 7" | 10'-0 | 5'-3 |
| | 8' | 9" | 9" | #4 | 14" | 9'-0 | #4 | 7" | 18'-6 | 92 | #6 | 14" | 26'-3 | 6'-1 | 3'-4 | 6½" | 4'-4 | #6 | 14" | 26'-6 | #6 | 14" | 18'-9 | 42 | #5 | 7" | 10'-6 | 5'-3 |
| 10' | 3' | 10" | 10" | #4 | 11" | 4'-3 | #5 | 5½" | 9'-0 | 68 | #6 | 11" | 31'-3 | 7'-0 | 4'-2 | 7½" | 5'-5 | #5 | 11" | 32'-9 | #6 | 11" | 23'-0 | 48 | #5 | 5½" | 9'-3 | 6'-6 |
| | 4' | 10½" | 10" | #4 | 11" | 5'-3 | #5 | 5½" | 11'-0 | 76 | #6 | 11" | 31'-3 | 6'-11 | 4'-2 | 8" | 5'-4 | #5 | 11" | 32'-9 | #6 | 11" | 23'-0 | 48 | #5 | 5½" | 9'-9 | 6'-6 |
| | 5' | 10½" | 10" | #4 | 11" | 6'-3 | #6 | 11" | 13'-0 | 76 | #6 | 11" | 31'-6 | 7'-0½ | 4'-2 | 8" | 5'-4 | #5 | 11" | 32'-9 | #6 | 11" | 23'-0 | 48 | #5 | 5½" | 10'-3 | 6'-6 |
| | 6' | 10½" | 10" | #4 | 13" | 7'-3 | #5 | 6½" | 15'-0 | 84 | #6 | 13" | 31'-6 | 7'-1½ | 4'-0 | 8" | 5'-6 | #6 | 13" | 32'-9 | #7 | 13" | 23'-0 | 48 | #5 | 6½" | 10'-9 | 6'-6 |
| | 7' | 10½" | 10" | #4 | 13" | 8'-3 | #5 | 6½" | 17'-0 | 92 | #6 | 13" | 31'-6 | 7'-1½ | 4'-0 | 8" | 5'-6 | #6 | 13" | 32'-9 | #7 | 13" | 23'-0 | 48 | #5 | 6½" | 11'-3 | 6'-6 |
| | 8' | 10½" | 10" | #4 | 13" | 9'-3 | #6 | 13" | 19'-0 | 92 | #6 | 13" | 31'-6 | 7'-1½ | 4'-0 | 8" | 5'-6 | #6 | 13" | 32'-9 | #7 | 13" | 23'-0 | 48 | #5 | 6½" | 11'-9 | 6'-6 |
| | 9' | 10½" | 10" | #4 | 13" | 10'-3 | #6 | 13" | 21'-0 | 100 | #6 | 13" | 31'-6 | 7'-1½ | 4'-0 | 8" | 5'-6 | #6 | 13" | 32'-9 | #7 | 13" | 23'-0 | 48 | #5 | 6½" | 12'-3 | 6'-6 |
| | 10' | 10½" | 10" | #4 | 13" | 11'-3 | #4 | 6½" | 23'-0 | 108 | #6 | 13" | 31'-6 | 7'-1½ | 4'-0 | 8" | 5'-6 | #6 | 13" | 32'-9 | #7 | 13" | 23'-0 | 48 | #5 | 6½" | 12'-9 | 6'-6 |
| 12' | 8' | 12½" | 12" | #4 | 11" | 9'-6 | #5 | 5½" | 20'-0 | 92 | #6 | 11" | 37'-6 | 8'-2 | 5'-0 | 10" | 6'-4 | #6 | 11" | 39'-6 | #7 | 11" | 27'-6 | 60 | #5 | 5½" | 13'-3 | 7'-8 |
| | 9' | 12½" | 12" | #4 | 11" | 10'-6 | #5 | 5½" | 22'-0 | 100 | #6 | 11" | 38'-0 | 8'-6 | 5'-0 | 10" | 6'-4 | #6 | 11" | 39'-6 | #7 | 11" | 27'-6 | 60 | #5 | 5½" | 13'-9 | 7'-8 |
| | 10' | 12½" | 12" | #4 | 12" | 11'-6 | #5 | 6" | 24'-0 | 108 | #7 | 12" | 38'-3 | 8'-7½ | 5'-0 | 10" | 6'-4 | #6 | 12" | 39'-6 | #7 | 12" | 27'-6 | 60 | #5 | 6" | 14'-3 | 7'-8 |
| | 11' | 12½" | 12" | #4 | 12" | 12'-6 | #5 | 6" | 26'-0 | 108 | #7 | 12" | 38'-3 | 8'-7½ | 5'-0 | 10" | 6'-4 | #6 | 12" | 39'-6 | #7 | 12" | 27'-6 | 60 | #5 | 6" | 14'-9 | 7'-8 |
| | 12' | 12½" | 12" | #4 | 12" | 13'-6 | #5 | 6" | 28'-0 | 116 | #7 | 12" | 37'-9 | 8'-4 | 5'-0 | 10" | 6'-4 | #6 | 12" | 39'-6 | #7 | 12" | 27'-6 | 60 | #5 | 6" | 15'-3 | 7'-8 |

⌖ Total number of bars in the cross-section.

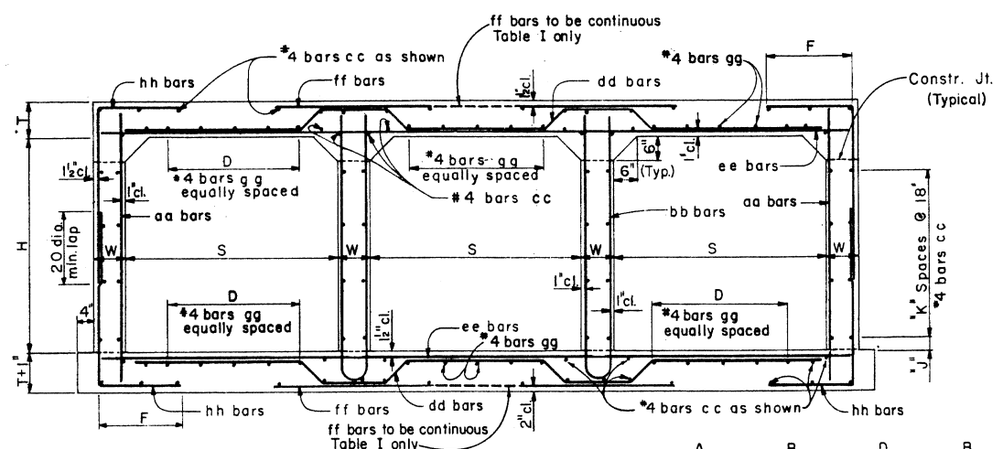


TYPICAL SECTION

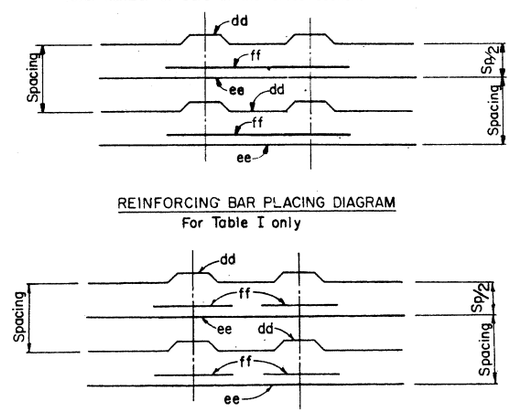


REINFORCING BAR PLACING DIAGRAM
For Table I only

REINFORCING BAR PLACING DIAGRAM
For Tables II through V

| Height "H" | "J" Dim. | "K" Spaces |
|---|---|---|
| 3' | 9" | 1 |
| 4' | 3" | 2 |
| 5' | 12" | 2 |
| 6' | 9" | 3 |
| 7' | 3" | 4 |
| 8' | 12" | 4 |
| 9' | 9 | 5 |
| 10' | 3" | 6 |
| 11' | 12" | 6 |
| 12' | 9" | 7 |

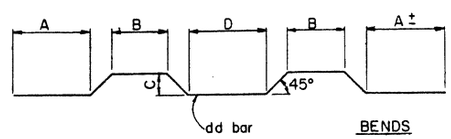


BENDS

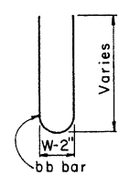


NOTE:
See B-02.35 for Tables II thru V.
See B-01.10 for general notes and miscellaneous details.
All bend dimensions are out to out of bar.

| | | | |
|---|---|---|---|
| DESIGN | DHY | 12-71 | Table I, ff bars & quantities |
| DRAWN | CAG | 8-72 | |
| CHECKED | MAB | 3-73 | |
| MADE BY | JTW | 7-78 | |

DESIGN APPROVED: R.C. Breckler
APPROVED FOR DISTRIBUTION: E.A. Donadio

ARIZONA
DEPARTMENT OF TRANSPORTATION
HIGHWAYS DIVISION
STANDARD PLANS

TRIPLE BARREL
BOX CULVERT

REVISION

STANDARD NO. CB-3
PLAN NO. B-02.30

## TABLE NO. II
### 10'-15' FILL

| Span "S" | Height "H" | Top Slab "T" | Walls "W" | aa | | | bb | | | cc | dd | | | | | | | ee | | | ff | | | gg | hh | | | |
|---|---|---|---|---|---|---|---|---|---|---|---|---|---|---|---|---|---|---|---|---|---|---|---|---|---|---|---|---|
| | | | | Size | Spacing | Length | Size | Spacing | Length | ⌖ Number | Size | Spacing | Length | A | B | C | D | Size | Spacing | Length | Size | Spacing | Length | ⌖ Number | Size | Spacing | Length | F |
| 6' | 3' | 8" | 8" | #4 | 12" | 3'-9 | #4 | 12" | 8'-0 | 68 | #5 | 12" | 19'-6 | 4'-4½ | 2'-6 | 5" | 3'-4 | #4 | 12" | 20'-3 | #5 | 12" | 4'-9 | 30 | #4 | 6" | 4'-3 | 1'-9 |
| | 4' | 8" | 8" | #4 | 12" | 4'-9 | #4 | 12" | 10'-0 | 76 | #5 | 12" | 20'-0 | 4'-7½ | 2'-6 | 5" | 3'-4 | #4 | 12" | 20'-3 | #5 | 12" | 4'-9 | 30 | #4 | 6" | 4'-9 | 1'-9 |
| | 5' | 8" | 8" | #4 | 12" | 5'-9 | #4 | 12" | 12'-0 | 76 | #5 | 12" | 20'-0 | 4'-7½ | 2'-6 | 5" | 3'-4 | #4 | 12" | 20'-3 | #5 | 12" | 4'-9 | 30 | #4 | 6" | 5'-3 | 1'-9 |
| | 6' | 8" | 8" | #4 | 11" | 6'-9 | #4 | 11" | 14'-0 | 84 | #5 | 11" | 20'-0 | 4'-7½ | 2'-6 | 5" | 3'-4 | #4 | 11" | 20'-3 | #5 | 11" | 4'-9 | 30 | #4 | 5½" | 5'-9 | 1'-9 |
| | 7' | 8" | 8" | #4 | 11" | 7'-9 | #4 | 11" | 16'-0 | 92 | #5 | 11" | 20'-0 | 4'-7½ | 2'-6 | 5" | 3'-4 | #4 | 11" | 20'-3 | #5 | 11" | 4'-9 | 30 | #4 | 5½" | 6'-3 | 1'-9 |
| 8' | 3' | 10" | 9" | #4 | 12" | 4'-3 | #4 | 12" | 9'-0 | 68 | #6 | 12" | 26'-0 | 6'-0 | 3'-0 | 7½" | 4'-6 | #5 | 12" | 26'-6 | #6 | 12" | 6'-3 | 36 | #5 | 6" | 5'-0 | 2'-3 |
| | 4' | 10" | 9" | #4 | 12" | 5'-3 | #4 | 12" | 11'-0 | 76 | #6 | 12" | 26'-6 | 6'-3 | 3'-0 | 7½" | 4'-6 | #5 | 12" | 26'-6 | #6 | 12" | 6'-3 | 36 | #4 | 6" | 5'-3 | 2'-0 |
| | 5' | 10" | 9" | #4 | 12" | 6'-3 | #4 | 12" | 13'-0 | 76 | #6 | 12" | 26'-6 | 6'-3 | 3'-0 | 7½" | 4'-6 | #5 | 12" | 26'-6 | #6 | 12" | 6'-3 | 36 | #4 | 6" | 5'-9 | 2'-0 |
| | 6' | 10" | 9" | #4 | 12" | 7'-3 | #4 | 12" | 15'-0 | 84 | #6 | 12" | 26'-6 | 6'-3 | 3'-0 | 7½" | 4'-6 | #5 | 12" | 26'-6 | #6 | 12" | 6'-3 | 36 | #4 | 6" | 6'-3 | 2'-0 |
| | 7' | 10" | 9" | #4 | 12" | 8'-3 | #4 | 12" | 17'-0 | 92 | #6 | 12" | 26'-6 | 6'-3 | 3'-0 | 7½" | 4'-6 | #5 | 12" | 26'-6 | #6 | 12" | 6'-3 | 36 | #4 | 6" | 6'-9 | 2'-0 |
| | 8' | 10" | 9" | #4 | 12" | 9'-3 | #4 | 12" | 19'-0 | 92 | #6 | 12" | 26'-6 | 6'-3 | 3'-0 | 7½" | 4'-6 | #5 | 12" | 26'-6 | #6 | 12" | 6'-3 | 36 | #5 | 6" | 7'-6 | 2'-3 |
| 10' | 3' | 12" | 10" | #4 | 11" | 4'-6 | #4 | 11" | 9'-6 | 68 | #6 | 11" | 31'-9 | 7'-3 | 3'-6 | 9½" | 5'-9 | #5 | 11" | 32'-9 | #7 | 11" | 7'-6 | 42 | #5 | 5½" | 5'-3 | 2'-3 |
| | 4' | 12" | 10" | #4 | 11" | 5'-6 | #4 | 11" | 11'-6 | 76 | #6 | 11" | 31'-9 | 7'-3 | 3'-6 | 9½" | 5'-9 | #5 | 11" | 32'-9 | #7 | 11" | 7'-6 | 42 | #5 | 5½" | 5'-9 | 2'-3 |
| | 5' | 12½" | 10" | #4 | 11" | 6'-6 | #4 | 11" | 13'-6 | 76 | #6 | 11" | 32'-3 | 7'-5 | 3'-6 | 10" | 5'-8 | #5 | 11" | 32'-9 | #7 | 11" | 7'-6 | 42 | #5 | 5½" | 6'-3 | 2'-3 |
| | 6' | 12½" | 10" | #4 | 11" | 7'-6 | #4 | 11" | 15'-6 | 84 | #6 | 11" | 32'-3 | 7'-5 | 3'-6 | 10" | 5'-8 | #5 | 11" | 32'-9 | #7 | 11" | 7'-6 | 42 | #4 | 5½" | 6'-9 | 2'-3 |
| | 7' | 12½" | 10" | #4 | 11" | 8'-6 | #4 | 11" | 17'-6 | 92 | #6 | 11" | 32'-3 | 7'-5 | 3'-6 | 10" | 5'-8 | #5 | 11" | 32'-9 | #7 | 11" | 7'-6 | 42 | #4 | 5½" | 7'-3 | 2'-3 |
| | 8' | 12½" | 10" | #4 | 13" | 9'-6 | #4 | 13" | 19'-6 | 92 | #7 | 13" | 33'-0 | 7'-9 | 3'-6 | 10" | 5'-8 | #6 | 13" | 32'-9 | #7 | 13" | 7'-6 | 42 | #5 | 6½" | 7'-9 | 2'-3 |
| | 9' | 12½" | 10" | #4 | 13" | 10'-6 | #4 | 13" | 21'-6 | 100 | #7 | 13" | 33'-0 | 7'-9 | 3'-6 | 10" | 5'-8 | #6 | 13" | 32'-9 | #7 | 13" | 7'-6 | 42 | #5 | 6½" | 8'-3 | 2'-3 |
| | 10' | 12½" | 10" | #4 | 13" | 11'-6 | #4 | 13" | 23'-6 | 108 | #7 | 13" | 33'-0 | 7'-9 | 3'-6 | 10" | 5'-8 | #6 | 13" | 32'-9 | #7 | 13" | 7'-6 | 42 | #5 | 6½" | 9'-0 | 2'-6 |
| 12' | 8' | 15" | 12" | #4 | 11" | 10'-0 | #4 | 11" | 20'-6 | 92 | #6 | 11" | 38'-3 | 8'-6 | 4'-6 | 12½" | 6'-5 | #6 | 11" | 39'-6 | #8 | 11" | 9'-0 | 48 | #5 | 5½" | 8'-3 | 2'-6 |
| | 9' | 15" | 12" | #4 | 11" | 11'-0 | #4 | 11" | 22'-6 | 100 | #6 | 11" | 38'-9 | 8'-8½ | 4'-6 | 12½" | 6'-5 | #6 | 11" | 39'-6 | #8 | 11" | 9'-0 | 48 | #5 | 5½" | 8'-9 | 2'-6 |
| | 10' | 15" | 12" | #4 | 11" | 12'-0 | #4 | 11" | 24'-6 | 108 | #6 | 11" | 38'-3 | 8'-6 | 4'-6 | 12½" | 6'-5 | #6 | 11" | 39'-6 | #8 | 11" | 9'-0 | 48 | #5 | 5½" | 9'-6 | 2'-9 |
| | 11' | 15" | 12" | #4 | 11" | 13'-0 | #4 | 11" | 26'-6 | 108 | #6 | 11" | 38'-3 | 8'-6 | 4'-6 | 12½" | 6'-5 | #6 | 11" | 39'-6 | #8 | 11" | 9'-0 | 48 | #5 | 5½" | 10'-0 | 2'-9 |
| | 12' | 15" | 12" | #4 | 11 | 14'-0 | #4 | 11 | 28'-6 | 116 | #6 | 11" | 38'-3 | 8'-6 | 4'-6 | 12½" | 6'-5 | #6 | 11" | 39'-6 | #8 | 11" | 9'-0 | 48 | #5 | 5½" | 10'-9 | 3'-0 |

## TABLE NO. III
### 15'-20' FILL

| Span "S" | Height "H" | Top Slab "T" | Walls "W" | aa | | | bb | | | cc | dd | | | | | | | ee | | | ff | | | gg | hh | | | |
|---|---|---|---|---|---|---|---|---|---|---|---|---|---|---|---|---|---|---|---|---|---|---|---|---|---|---|---|---|
| | | | | Size | Spacing | Length | Size | Spacing | Length | ⌖ Number | Size | Spacing | Length | A | B | C | D | Size | Spacing | Length | Size | Spacing | Length | ⌖ Number | Size | Spacing | Length | F |
| 6' | 3' | 9" | 8" | #4 | 11" | 4'-0 | #4 | 11" | 8'-6 | 68 | #5 | 11" | 20'-3 | 4'-6 | 2'-6 | 6½" | 3'-1 | #4 | 11" | 20'-3 | #5 | 11" | 4'-9 | 24 | #4 | 5½" | 4'-3 | 1'-8 |
| | 4' | 9" | 8" | #4 | 11" | 5'-0 | #4 | 11" | 10'-6 | 76 | #5 | 11" | 20'-3 | 4'-6 | 2'-6 | 6½" | 3'-1 | #4 | 11" | 20'-3 | #5 | 11" | 4'-9 | 24 | #4 | 5½" | 4'-9 | 1'-8 |
| | 5' | 9" | 8" | #4 | 11" | 6'-0 | #4 | 11" | 12'-6 | 76 | #5 | 11" | 20'-3 | 4'-6 | 2'-6 | 6½" | 3'-1 | #4 | 11" | 20'-3 | #5 | 11" | 4'-9 | 24 | #4 | 5½" | 5'-3 | 1'-8 |
| | 6' | 9" | 8" | #4 | 11" | 7'-0 | #4 | 11" | 14'-6 | 84 | #5 | 11" | 20'-3 | 4'-6 | 2'-6 | 6½" | 3'-1 | #4 | 11" | 20'-3 | #5 | 11" | 4'-9 | 24 | #4 | 5½" | 5'-9 | 1'-8 |
| | 7' | 9" | 8" | #4 | 11" | 8'-0 | #4 | 11" | 16'-6 | 92 | #5 | 11" | 20'-3 | 4'-6 | 2'-6 | 6½" | 3'-1 | #4 | 11" | 20'-3 | #5 | 11" | 4'-9 | 24 | #4 | 5½" | 6'-3 | 1'-8 |
| 8' | 3' | 11½" | 9" | #4 | 12" | 4'-6 | #4 | 12" | 9'-6 | 68 | #6 | 12" | 26'-6 | 6'-0 | 3'-0 | 9" | 4'-3 | #5 | 12" | 26'-6 | #6 | 12" | 6'-3 | 36 | #4 | 6" | 4'-6 | 1'-9 |
| | 4' | 11½" | 9" | #4 | 12" | 5'-6 | #4 | 12" | 11'-6 | 76 | #6 | 12" | 26'-6 | 6'-0 | 3'-0 | 9" | 4'-3 | #5 | 12" | 26'-6 | #6 | 12" | 6'-3 | 36 | #4 | 6" | 5'-0 | 1'-9 |
| | 5' | 11½" | 9" | #4 | 13" | 6'-6 | #4 | 13" | 13'-6 | 76 | #6 | 13" | 26'-6 | 6'-0 | 3'-0 | 9" | 4'-3 | #5 | 13" | 26'-6 | #7 | 13" | 6'-6 | 36 | #5 | 6½" | 6'-0 | 2'-0 |
| | 6' | 11½" | 9" | #4 | 13" | 7'-6 | #4 | 13" | 15'-6 | 84 | #6 | 13" | 26'-6 | 6'-0 | 3'-0 | 9" | 4'-3 | #5 | 13" | 26'-6 | #7 | 13" | 6'-6 | 36 | #5 | 6½" | 6'-6 | 2'-0 |
| | 7' | 11½" | 9" | #4 | 13" | 8'-6 | #4 | 13" | 17'-6 | 92 | #6 | 13" | 26'-6 | 6'-0 | 3'-0 | 9" | 4'-3 | #5 | 13" | 26'-6 | #7 | 13" | 6'-6 | 36 | #5 | 6½" | 7'-0 | 2'-0 |
| | 8' | 11½" | 9" | #4 | 13" | 9'-6 | #4 | 13" | 19'-6 | 92 | #6 | 13" | 26'-6 | 6'-3 | 2'-6 | 9" | 4'-9 | #5 | 13" | 26'-6 | #7 | 13" | 6'-6 | 36 | #5 | 6½" | 7'-9 | 2'-4 |
| 10' | 3' | 14½" | 10" | #4 | 13" | 5'-0 | #4 | 13" | 10'-6 | 68 | #6 | 13" | 32'-6 | 7'-6 | 3'-0 | 1'-0 | 5'-10 | #6 | 13" | 32'-9 | #8 | 13" | 7'-9 | 42 | #5 | 6½" | 5'-3 | 2'-0 |
| | 4' | 14½" | 10" | #4 | 13" | 6'-0 | #4 | 13" | 12'-6 | 76 | #6 | 13" | 32'-6 | 7'-6 | 3'-0 | 1'-0 | 5'-10 | #6 | 13" | 32'-9 | #8 | 13" | 7'-9 | 42 | #5 | 6½" | 5'-9 | 2'-0 |
| | 5' | 15" | 10" | #4 | 13" | 7'-0 | #4 | 13" | 14'-6 | 76 | #6 | 13" | 33'-3 | 7'-10 | 3'-0 | 1'-0½ | 5'-9 | #6 | 13" | 32'-9 | #8 | 13" | 7'-9 | 42 | #5 | 6½" | 6'-3 | 2'-0 |
| | 6' | 15" | 10" | #4 | 13" | 8'-0 | #4 | 13" | 16'-6 | 84 | #6 | 13" | 33'-3 | 7'-10 | 3'-0 | 1'-0½ | 5'-9 | #6 | 13" | 32'-9 | #8 | 13" | 7'-9 | 42 | #5 | 6½" | 6'-9 | 2'-0 |
| | 7' | 15" | 10" | #4 | 13" | 9'-0 | #4 | 13" | 18'-6 | 92 | #6 | 13" | 33'-3 | 7'-10 | 3'-0 | 1'-0½ | 5'-9 | #6 | 13" | 32'-9 | #8 | 13" | 7'-9 | 42 | #5 | 6½" | 7'-3 | 2'-0 |
| | 8' | 15" | 10" | #4 | 13" | 10'-0 | #4 | 13" | 20'-6 | 92 | #6 | 13" | 33'-3 | 7'-10 | 3'-0 | 1'-0½ | 5'-9 | #6 | 13" | 32'-9 | #8 | 13" | 7'-9 | 42 | #5 | 6½" | 7'-9 | 2'-0 |
| | 9' | 15" | 10" | #4 | 13" | 11'-0 | #4 | 13" | 22'-6 | 100 | #6 | 13" | 32'-9 | 7'-7 | 3'-0 | 1'-0½ | 5'-9 | #6 | 13" | 32'-9 | #8 | 13" | 7'-9 | 42 | #5 | 6½" | 8'-6 | 2'-4 |
| | 10' | 15" | 10" | #4 | 12" | 12'-0 | #4 | 12" | 24'-6 | 108 | #6 | 12" | 32'-9 | 7'-7 | 3'-0 | 1'-0½ | 5'-9 | #6 | 12" | 32'-9 | #8 | 12" | 7'-9 | 42 | #5 | 6" | 9'-0 | 2'-4 |
| 12' | 8' | 18" | 12" | #4 | 12" | 10'-6 | #4 | 12" | 21'-6 | 92 | #7 | 12" | 39'-6 | 8'-10 | 4'-0 | 1'-3½ | 6'-5 | #6 | 12" | 39'-6 | #8 | 12" | 9'-0 | 48 | #5 | 6" | 8'-3 | 2'-4 |
| | 9' | 18" | 12" | #4 | 12" | 11'-6 | #4 | 12" | 23'-6 | 100 | #7 | 12" | 39'-6 | 8'-10 | 4'-0 | 1'-3½ | 6'-5 | #6 | 12" | 39'-6 | #8 | 12" | 9'-0 | 48 | #5 | 6" | 9'-0 | 2'-6 |
| | 10' | 18" | 12" | #4 | 12" | 12'-6 | #4 | 12" | 25'-6 | 108 | #7 | 12" | 39'-6 | 8'-10 | 4'-0 | 1'-3½ | 6'-5 | #6 | 12" | 39'-6 | #8 | 12" | 9'-0 | 48 | #5 | 6" | 9'-6 | 2'-6 |
| | 11' | 18" | 12" | #4 | 12" | 13'-6 | #4 | 12" | 27'-6 | 108 | #7 | 12" | 39'-6 | 8'-10 | 4'-0 | 1'-3½ | 6'-5 | #6 | 12" | 39'-6 | #8 | 12" | 9'-0 | 48 | #5 | 6" | 10'-0 | 2'-6 |
| | 12' | 18" | 12" | #5 | 12" | 14'-6 | #4 | 12" | 29'-6 | 116 | #7 | 12" | 39'-6 | 8'-10 | 4'-0 | 1'-3½ | 6'-5 | #6 | 12" | 39'-6 | #8 | 12" | 9'-0 | 48 | #5 | 6" | 11'-0 | 3'-0 |

## TABLE NO. IV
### 20'-25' FILL

| Span "S" | Height "H" | Top Slab "T" | Walls "W" | aa | | | bb | | | cc | dd | | | | | | | ee | | | ff | | | gg | hh | | | |
|---|---|---|---|---|---|---|---|---|---|---|---|---|---|---|---|---|---|---|---|---|---|---|---|---|---|---|---|---|
| | | | | Size | Spacing | Length | Size | Spacing | Length | ⌖ Number | Size | Spacing | Length | A | B | C | D | Size | Spacing | Length | Size | Spacing | Length | ⌖ Number | Size | Spacing | Length | F |
| 6' | 3' | 10½" | 8" | #4 | 11" | 4'-3 | #4 | 11" | 9'-0 | 68 | #5 | 11" | 21'-0 | 4'-8 | 2'-6 | 8" | 2'-10 | #4 | 11" | 20'-3 | #5 | 11" | 5'-3 | 24 | #4 | 5½" | 4'-3 | 1'-6 |
| | 4' | 10½" | 8" | #4 | 11" | 5'-3 | #4 | 11" | 11'-0 | 76 | #5 | 11" | 21'-0 | 4'-8 | 2'-6 | 8" | 2'-10 | #4 | 11" | 20'-3 | #5 | 11" | 5'-3 | 24 | #4 | 5½" | 4'-9 | 1'-6 |
| | 5' | 10½" | 8" | #4 | 11" | 6'-3 | #4 | 11" | 13'-0 | 76 | #5 | 11" | 21'-0 | 4'-8 | 2'-6 | 8" | 2'-10 | #4 | 11" | 20'-3 | #5 | 11" | 5'-3 | 24 | #4 | 5½" | 5'-3 | 1'-6 |
| | 6' | 10½" | 8" | #4 | 11" | 7'-3 | #4 | 11" | 15'-0 | 84 | #5 | 11" | 21'-0 | 4'-8 | 2'-6 | 8" | 2'-10 | #4 | 11" | 20'-3 | #5 | 11" | 4'-9 | 24 | #4 | 5½" | 6'-0 | 1'-9 |
| | 7' | 10½" | 8" | #4 | 11" | 8'-3 | #4 | 11" | 17'-0 | 92 | #5 | 11" | 21'-0 | 4'-8 | 2'-6 | 8" | 2'-10 | #4 | 11" | 20'-3 | #5 | 11" | 4'-9 | 24 | #4 | 5½" | 6'-6 | 1'-9 |
| 8' | 3' | 13½" | 9" | #4 | 11" | 4'-9 | #4 | 11" | 10'-0 | 68 | #5 | 11" | 27'-0 | 5'-11 | 3'-0 | 11" | 3'-11 | #5 | 11" | 26'-6 | #7 | 11" | 6'-6 | 30 | #4 | 5½" | 4'-6 | 1'-6 |
| | 4' | 13½" | 9" | #4 | 11" | 5'-9 | #4 | 11" | 12'-0 | 76 | #5 | 11" | 27'-0 | 5'-11 | 3'-0 | 11" | 3'-11 | #5 | 11" | 26'-6 | #7 | 11" | 6'-6 | 30 | #4 | 5½" | 5'-0 | 1'-6 |
| | 5' | 13½" | 9" | #4 | 11" | 6'-9 | #4 | 11" | 14'-0 | 76 | #5 | 11" | 27'-0 | 5'-11 | 3'-0 | 11" | 3'-11 | #5 | 11" | 26'-6 | #7 | 11" | 6'-6 | 30 | #4 | 5½" | 5'-6 | 1'-6 |
| | 6' | 13½" | 9" | #4 | 11" | 7'-9 | #4 | 11" | 16'-0 | 84 | #5 | 11" | 27'-0 | 5'-11 | 3'-0 | 11" | 3'-11 | #5 | 11" | 26'-6 | #7 | 11" | 6'-6 | 30 | #4 | 5½" | 6'-3 | 1'-9 |
| | 7' | 13½" | 9" | #4 | 11" | 8'-9 | #4 | 11" | 18'-0 | 92 | #5 | 11" | 27'-0 | 5'-11 | 3'-0 | 11" | 3'-11 | #5 | 11" | 26'-6 | #7 | 11" | 6'-6 | 30 | #4 | 5½" | 6'-9 | 1'-9 |
| | 8' | 13½" | 9" | #4 | 12" | 9'-9 | #4 | 12" | 20'-0 | 92 | #5 | 12" | 27'-0 | 5'-11 | 3'-0 | 11" | 3'-11 | #5 | 12" | 26'-6 | #7 | 12" | 6'-6 | 30 | #5 | 6" | 7'-3 | 1'-9 |
| 10' | 3' | 16½" | 10" | #4 | 12" | 5'-3 | #4 | 12" | 11'-0 | 68 | #6 | 12" | 33'-6 | 7'-8 | 3'-0 | 1'-2 | 5'-6 | #6 | 12" | 32'-9 | #8 | 12" | 7'-9 | 42 | #5 | 6" | 5'-0 | 1'-9 |
| | 4' | 17" | 10" | #4 | 12" | 6'-3 | #4 | 12" | 13'-0 | 76 | #6 | 12" | 33'-6 | 7'-7 | 3'-0 | 1'-2½ | 5'-5 | #6 | 12" | 32'-9 | #8 | 12" | 7'-9 | 42 | #4 | 6" | 5'-6 | 1'-9 |
| | 5' | 17" | 10" | #4 | 12" | 7'-3 | #4 | 12" | 15'-0 | 76 | #6 | 12" | 33'-6 | 7'-7 | 3'-0 | 1'-2½ | 5'-5 | #6 | 12" | 32'-9 | #8 | 12" | 7'-9 | 42 | #4 | 6" | 6'-0 | 1'-9 |
| | 6' | 17" | 10" | #4 | 12" | 8'-3 | #4 | 12" | 17'-0 | 84 | #6 | 12" | 33'-6 | 7'-7 | 3'-0 | 1'-2½ | 5'-5 | #6 | 12" | 32'-9 | #8 | 12" | 7'-9 | 42 | #4 | 6" | 6'-6 | 1'-9 |
| | 7' | 17" | 10" | #4 | 12" | 9'-3 | #4 | 12" | 19'-0 | 92 | #6 | 12" | 33'-6 | 7'-7 | 3'-0 | 1'-2½ | 5'-5 | #6 | 12" | 32'-9 | #8 | 12" | 7'-9 | 42 | #4 | 6" | 7'-3 | 2'-0 |
| | 8' | 17" | 10" | #4 | 12" | 10'-3 | #4 | 12" | 21'-0 | 92 | #6 | 12" | 33'-6 | 7'-7 | 3'-0 | 1'-2½ | 5'-5 | #6 | 12" | 32'-9 | #8 | 12" | 7'-9 | 42 | #5 | 6" | 8'-0 | 2'-0 |
| | 9' | 17" | 10" | #4 | 12" | 11'-3 | #4 | 12" | 23'-0 | 100 | #6 | 12" | 33'-6 | 7'-7 | 3'-0 | 1'-2½ | 5'-5 | #6 | 12" | 32'-9 | #8 | 12" | 7'-9 | 42 | #5 | 6" | 8'-6 | 2'-0 |
| | 10' | 17" | 10" | #5 | 12" | 12'-3 | #4 | 12" | 25'-0 | 108 | #6 | 12" | 33'-6 | 7'-7 | 3'-0 | 1'-2½ | 5'-5 | #6 | 12" | 32'-9 | #8 | 12" | 7'-9 | 42 | #5 | 6" | 9'-0 | 2'-3 |
| 12' | 8' | 20½" | 12" | #4 | 15" | 11'-0 | #4 | 15" | 22'-6 | 92 | #6 | 10" | 40'-0 | 8'-9 | 4'-0 | 1'-6 | 6'-0 | #6 | 10" | 39'-6 | #8 | 10" | 9'-0 | 42 | #4 | 5" | 8'-3 | 2'-2 |
| | 9' | 20½" | 12" | #4 | 15" | 12'-0 | #4 | 15" | 24'-6 | 100 | #6 | 10" | 40'-0 | 8'-9 | 4'-0 | 1'-6 | 6'-0 | #6 | 10" | 39'-6 | #8 | 10" | 9'-0 | 42 | #5 | 5" | 9'-0 | 2'-4 |
| | 10' | 20½" | 12" | #4 | 10" | 13'-0 | #4 | 15" | 26'-6 | 108 | #6 | 10" | 40'-0 | 8'-9 | 4'-0 | 1'-6 | 6'-0 | #6 | 10" | 39'-6 | #8 | 10" | 9'-0 | 42 | #5 | 5" | 9'-9 | 2'-6 |
| | 11' | 20½" | 12" | #4 | 10" | 14'-0 | #4 | 15" | 28'-6 | 108 | #6 | 10" | 39'-6 | 8'-6 | 4'-0 | 1'-6 | 6'-0 | #6 | 10" | 39'-6 | #8 | 10" | 9'-0 | 42 | #5 | 5" | 10'-3 | 2'-6 |
| | 12' | 20½" | 12" | #5 | 10" | 15'-0 | #4 | 15" | 30'-6 | 116 | #6 | 10" | 39'-6 | 8'-6 | 4'-0 | 1'-6 | 6'-0 | #6 | 10" | 39'-6 | #8 | 10" | 9'-0 | 42 | #5 | 5" | 11'-0 | 2'-9 |

⌖ Total number of bars in the cross-section.

## TABLE NO. V
### 25'-30' FILL

| Span "S" | Height "H" | Top Slab "T" | Walls "W" | aa | | | bb | | | cc | dd | | | | | | | ee | | | ff | | | gg | hh | | | |
|---|---|---|---|---|---|---|---|---|---|---|---|---|---|---|---|---|---|---|---|---|---|---|---|---|---|---|---|---|
| | | | | Size | Spacing | Length | Size | Spacing | Length | ⌖ Number | Size | Spacing | Length | A | B | C | D | Size | Spacing | Length | Size | Spacing | Length | ⌖ Number | Size | Spacing | Length | F |
| 6' | 3' | 11½" | 8" | #4 | 15" | 4'-6 | #4 | 15" | 9'-6 | 68 | #5 | 10" | 21'-0 | 4'-9½" | 2'-0 | 9" | 3'-2 | #4 | 10" | 20'-3 | #5 | 10" | 5'-3 | 24 | #4 | 5" | 4'-3 | 1'-6 |
| | 4' | 11½" | 8" | #4 | 15" | 5'-6 | #4 | 15" | 11'-6 | 76 | #5 | 10" | 21'-0 | 4'-9½ | 2'-0 | 9" | 3'-2 | #4 | 10" | 20'-3 | #5 | 10" | 5'-3 | 24 | #4 | 5" | 4'-9 | 1'-6 |
| | 5' | 11½" | 8" | #4 | 15" | 6'-6 | #4 | 15" | 13'-6 | 76 | #5 | 10" | 21'-0 | 4'-9½ | 2'-0 | 9" | 3'-2 | #4 | 10" | 20'-3 | #5 | 10" | 5'-3 | 24 | #4 | 5" | 5'-3 | 1'-6 |
| | 6' | 11½" | 8" | #4 | 15" | 7'-6 | #4 | 15" | 15'-6 | 84 | #5 | 10" | 21'-0 | 4'-9½ | 2'-0 | 9" | 3'-2 | #4 | 10" | 20'-3 | #5 | 10" | 4'-9 | 24 | #4 | 5" | 6'-0 | 1'-9 |
| | 7' | 11½" | 8" | #4 | 10" | 8'-6 | #4 | 15" | 17'-6 | 92 | #5 | 10" | 21'-0 | 4'-9½ | 2'-0 | 9" | 3'-2 | #4 | 10" | 20'-3 | #5 | 10" | 4'-9 | 24 | #4 | 5" | 6'-6 | 1'-9 |
| 8' | 3' | 15½" | 9" | #4 | 11" | 5'-0 | #4 | 11" | 10'-9 | 68 | #5 | 11" | 27'-3 | 5'-9 | 3'-0 | 1'-1 | 3'-7 | #5 | 11" | 26'-6 | #7 | 11" | 7'-0 | 30 | #4 | 5½" | 4'-9 | 1'-8 |
| | 4' | 15½" | 9" | #4 | 11" | 6'-0 | #4 | 11" | 12'-9 | 76 | #5 | 11" | 27'-3 | 5'-9 | 3'-0 | 1'-1 | 3'-7 | #5 | 11" | 26'-6 | #7 | 11" | 7'-0 | 30 | #4 | 5½" | 5'-3 | 1'-8 |
| | 5' | 15½" | 9" | #4 | 11" | 7'-0 | #4 | 11" | 14'-9 | 76 | #5 | 11" | 27'-3 | 5'-9 | 3'-0 | 1'-1 | 3'-7 | #5 | 11" | 26'-6 | #7 | 11" | 6'-6 | 30 | #4 | 5½" | 5'-9 | 1'-8 |
| | 6' | 15½" | 9" | #4 | 11" | 8'-0 | #4 | 11" | 16'-9 | 84 | #5 | 11" | 27'-3 | 5'-9 | 3'-0 | 1'-1 | 3'-7 | #5 | 11" | 26'-6 | #7 | 11" | 6'-6 | 30 | #4 | 5½" | 6'-3 | 1'-8 |
| | 7' | 15½" | 9" | #4 | 11" | 9'-0 | #4 | 11" | 18'-9 | 92 | #5 | 11" | 27'-3 | 5'-9 | 3'-0 | 1'-1 | 3'-7 | #5 | 11" | 26'-6 | #7 | 11" | 6'-6 | 30 | #4 | 5½" | 7'-0 | 1'-10 |
| | 8' | 15½" | 9" | #4 | 11" | 10'-0 | #4 | 11" | 20'-9 | 92 | #5 | 11" | 27'-3 | 5'-9 | 3'-0 | 1'-1 | 3'-7 | #5 | 11" | 26'-6 | #7 | 11" | 6'-6 | 30 | #5 | 5½" | 7'-9 | 2'-0 |
| 10' | 3' | 19" | 10" | #4 | 11" | 5'-9 | #4 | 11" | 11'-9 | 68 | #6 | 11" | 33'-9 | 7'-5 | 3'-0 | 1'-4½ | 5'-1 | #6 | 11" | 32'-9 | #8 | 11" | 7'-9 | 36 | #4 | 5½" | 5'-0 | 1'-7 |
| | 4' | 19" | 10" | #4 | 11" | 6'-9 | #4 | 11" | 13'-9 | 76 | #6 | 11" | 33'-9 | 7'-5 | 3'-0 | 1'-4½ | 5'-1 | #6 | 11" | 32'-9 | #8 | 11" | 7'-9 | 36 | #4 | 5½" | 5'-6 | 1'-7 |
| | 5' | 19" | 10" | #4 | 11" | 7'-9 | #4 | 11" | 15'-9 | 76 | #6 | 11" | 33'-9 | 7'-5 | 3'-0 | 1'-4½ | 5'-1 | #6 | 11" | 32'-9 | #8 | 11" | 7'-9 | 36 | #4 | 5½" | 6'-0 | 1'-7 |
| | 6' | 19" | 10" | #4 | 11" | 8'-9 | #4 | 11" | 17'-9 | 84 | #6 | 11" | 33'-9 | 7'-5 | 3'-0 | 1'-4½ | 5'-1 | #6 | 11" | 32'-9 | #8 | 11" | 7'-9 | 36 | #4 | 5½" | 6'-6 | 1'-7 |
| | 7' | 19" | 10" | #4 | 11" | 9'-9 | #4 | 11" | 19'-9 | 92 | #6 | 11" | 33'-9 | 7'-5 | 3'-0 | 1'-4½ | 5'-1 | #6 | 11" | 32'-9 | #8 | 11" | 7'-9 | 36 | #4 | 5½" | 7'-0 | 1'-7 |
| | 8' | 19" | 10" | #4 | 13" | 10'-9 | #4 | 13" | 21'-9 | 92 | #7 | 13" | 34'-3 | 7'-8 | 3'-0 | 1'-4½ | 5'-1 | #6 | 13" | 32'-9 | #8 | 13" | 7'-9 | 36 | #5 | 6½" | 8'-0 | 2'-0 |
| | 9' | 19" | 10" | #5 | 13" | 11'-9 | #4 | 13" | 23'-9 | 100 | #7 | 13" | 34'-3 | 7'-8 | 3'-0 | 1'-4½ | 5'-1 | #6 | 13" | 32'-9 | #8 | 13" | 7'-9 | 36 | #5 | 6½" | 8'-6 | 2'-0 |
| | 10' | 19" | 10" | #5 | 11" | 12'-9 | #4 | 11" | 25'-9 | 108 | #6 | 11" | 33'-9 | 7'-5 | 3'-0 | 1'-4½ | 5'-1 | #6 | 11" | 32'-9 | #8 | 11" | 7'-9 | 36 | #5 | 5½" | 9'-3 | 2'-3 |
| 12' | 8' | 23" | 12" | #4 | 10" | 11'-3 | #4 | 15" | 23'-0 | 92 | #6 | 10" | 40'-3 | 8'-6 | 4'-0 | 1'-8½ | 5'-7 | #6 | 10" | 39'-6 | #8 | 10" | 9'-0 | 42 | #4 | 5" | 8'-3 | 2'-0 |
| | 9' | 23" | 12" | #4 | 10" | 12'-3 | #4 | 15" | 25'-0 | 100 | #6 | 10" | 40'-3 | 8'-6 | 4'-0 | 1'-8½ | 5'-7 | #6 | 10" | 39'-6 | #8 | 10" | 9'-0 | 42 | #5 | 5" | 9'-3 | 2'-4 |
| | 10' | 23" | 12" | #4 | 10" | 13'-3 | #4 | 15" | 27'-0 | 108 | #6 | 10" | 40'-3 | 8'-6 | 4'-0 | 1'-8½ | 5'-7 | #6 | 10" | 39'-6 | #8 | 10" | 9'-0 | 42 | #5 | 5" | 9'-9 | 2'-4 |
| | 11' | 23" | 12" | #5 | 10" | 14'-3 | #4 | 15" | 29'-0 | 108 | #6 | 10" | 40'-3 | 8'-6 | 4'-0 | 1'-8½ | 5'-7 | #6 | 10" | 39'-6 | #8 | 10" | 9'-0 | 42 | #5 | 5" | 10'-6 | 2'-8 |
| | 12' | 23" | 12" | #6 | 10" | 15'-3 | #4 | 15" | 31'-0 | 116 | #6 | 10" | 39'-9 | 8'-3 | 4'-0 | 1'-8½ | 5'-7 | #6 | 10" | 39'-6 | #8 | 10" | 9'-0 | 42 | #5 | 5" | 11'-0 | 2'-8 |

NOTE:

See B-02.30 for Table No.I, typical section, steel call outs, bend diagrams and quantities.

See B-01.10 for general notes and miscellaneous details.

| DATE | NO. | DESCRIPTION OF REVISIONS | MADE BY | DATE |
|---|---|---|---|---|
| 12-71 | ① | Table II, 6' span, T now 8" | JTW | 7-76 |
| 8-72 | ② | | | |
| 3-73 | ③ | | | |

| | |
|---|---|
| DESIGN | DHY |
| DRAWN | CAG |
| CHECKED | NAB |

DESIGN APPROVED: R. C. Buckler

APPROVED FOR DISTRIBUTION: E. Sandlin

ARIZONA
DEPARTMENT OF TRANSPORTATION
HIGHWAYS DIVISION
STANDARD PLANS

TRIPLE BARREL
BOX CULVERT

REVISION

STANDARD NO. CB-3A

PLAN NO. B-02.35

| *QUANTITIES PER LIN. FOOT OF BARRELS | | | | | | | | | | | | | |
|---|---|---|---|---|---|---|---|---|---|---|---|---|---|
| | | Table I | | Table II | | Table III | | Table IV | | Table V | | | |
| Span "S" | Height "H" | Concrete C.Y. | Reinf. Steel Lbs. | Concrete C.Y. | Reinf. Steel Lbs. | Concrete C.Y. | Reinf. Steel Lbs. | Concrete C.Y. | Reinf. Steel Lbs. | Concrete C.Y. | Reinf. Steel Lbs. | | |
| 6' | 3' | 1.860 | 310.5 | 1.860 | 251.7 | 2.031 | 265.2 | 2.287 | 271.7 | 2.458 | 283.7 | | |
| | 4' | 1.984 | 315.8 | 1.984 | 267.4 | 2.154 | 280.6 | 2.411 | 287.2 | 2.583 | 297.9 | | |
| | 5' | 2.107 | 324.5 | 2.107 | 275.4 | 2.278 | 289.3 | 2.534 | 295.9 | 2.705 | 305.4 | | |
| | 6' | 2.231 | 339.9 | 2.231 | 307.5 | 2.401 | 304.8 | 2.657 | 309.4 | 2.828 | 317.4 | | |
| | 7' | 2.354 | 355.3 | 2.354 | 322.9 | 2.525 | 320.2 | 2.781 | 324.8 | 2.952 | 336.1 | | |
| 8' | 3' | 2.459 | 427.7 | 2.794 | 395.7 | 3.128 | 381.6 | 3.573 | 394.7 | 4.019 | 406.0 | | |
| | 4' | 2.598 | 488.8 | 2.932 | 395.5 | 3.267 | 396.3 | 3.712 | 410.2 | 4.157 | 421.5 | | |
| | 5' | 2.849 | 473.3 | 3.071 | 403.6 | 3.405 | 421.4 | 3.851 | 418.9 | 4.296 | 423.5 | | |
| | 6' | 2.987 | 491.6 | 3.210 | 418.3 | 3.544 | 436.8 | 3.990 | 435.8 | 4.435 | 438.9 | | |
| | 7' | 3.126 | 509.8 | 3.349 | 433.0 | 3.683 | 452.3 | 4.129 | 451.2 | 4.574 | 455.8 | | |
| | 8' | 3.265 | 522.7 | 3.488 | 464.8 | 3.822 | 463.0 | 4.268 | 452.2 | 4.712 | 490.8 | | |
| 10' | 3' | 3.385 | 606.5 | 3.935 | 515.8 | 4.621 | 525.7 | 5.171 | 563.7 | 5.858 | 588.5 | | |
| | 4' | 3.677 | 632.8 | 4.089 | 532.8 | 4.776 | 541.2 | 5.462 | 564.2 | 6.012 | 604.0 | | |
| | 5' | 3.831 | 629.3 | 4.381 | 544.9 | 5.067 | 552.0 | 5.617 | 572.2 | 6.166 | 612.7 | | |
| | 6' | 3.986 | 667.0 | 4.535 | 539.8 | 5.222 | 567.5 | 5.771 | 586.9 | 6.321 | 628.1 | | |
| | 7' | 4.140 | 690.3 | 4.689 | 555.3 | 5.376 | 582.9 | 5.925 | 602.9 | 6.475 | 643.6 | | |
| | 8' | 4.294 | 676.2 | 4.844 | 601.8 | 5.530 | 591.7 | 6.080 | 636.3 | 6.629 | 641.3 | | |
| | 9' | 4.449 | 696.3 | 4.998 | 617.2 | 5.685 | 607.7 | 6.234 | 652.5 | 6.783 | 664.9 | | |
| | 10' | 4.603 | 705.8 | 5.152 | 634.6 | 5.839 | 664.3 | 6.387 | 675.6 | 6.938 | 728.2 | | |
| 12' | 8' | 5.799 | 925.7 | 6.622 | 760.7 | 7.610 | 773.7 | 8.434 | 780.2 | 9.256 | 789.1 | | |
| | 9' | 5.985 | 953.7 | 6.808 | 780.2 | 7.795 | 791.9 | 8.618 | 828.4 | 9.441 | 840.3 | | |
| | 10' | 6.170 | 967.4 | 6.993 | 797.1 | 7.981 | 808.1 | 8.804 | 853.8 | 9.627 | 856.8 | | |
| | 11' | 6.355 | 985.4 | 7.178 | 807.5 | 8.166 | 817.6 | 8.989 | 861.8 | 9.812 | 881.9 | | |
| | 12' | 6.540 | 1008.1 | 7.363 | 826.8 | 8.351 | 848.9 | 9.174 | 880.8 | 9.997 | 914.3 | | |

| TABLE NO. I 0'-10' FILL | | | | | | | | | | | | | | | | | | | | | | | | | | | | | | | |
|---|---|---|---|---|---|---|---|---|---|---|---|---|---|---|---|---|---|---|---|---|---|---|---|---|---|---|---|---|---|---|---|
| | | | | aa | | | bb | | | cc | dd | | | | | | ee | | | ff | | | gg | hh | | | |
| Span "S" | Height "H" | Top Slab "T" | Walls "W" | Size | Spacing | Length | Size | Spacing | Length | Number ⌖ | Size | Spacing | Length | A | B | C | D | Size | Spacing | Length | Size | Spacing | Length | Number ⌖ | Size | Spacing | Length | F |
| 6' | 3' | 8" | 8" | #4 | 11" | 3'-9 | #5 | 11" | 8'-3 | 88 | #4 | 11" | 27'-9 | 5'-1 | 2'-3 | 5½" | 3'-6 | #5 | 11" | 14'-0 | #5 | 11" | 21'-0 | 40 | #4 | 5½" | 6'-9 | 4'-2 |
| | 4' | 8" | 8" | #4 | 11" | 4'-9 | #4 | 11" | 10'-3 | 98 | #4 | 11" | 27'-9 | 5'-1 | 2'-3 | 5½" | 3'-6 | #5 | 11" | 14'-0 | #5 | 11" | 21'-0 | 40 | #4 | 5½" | 7'-3 | 4'-2 |
| | 5' | 8" | 8" | #4 | 11" | 5'-9 | #4 | 11" | 12'-3 | 98 | #4 | 11" | 27'-9 | 5'-1 | 2'-3 | 5½" | 3'-6 | #5 | 11" | 14'-0 | #5 | 11" | 21'-0 | 40 | #4 | 5½" | 7'-9 | 4'-2 |
| | 6' | 8" | 8" | #4 | 11" | 6'-9 | #4 | 11" | 14'-3 | 108 | #4 | 11" | 27'-9 | 5'-1 | 2'-3 | 5½" | 3'-6 | #5 | 11" | 14'-0 | #5 | 11" | 21'-0 | 40 | #4 | 5½" | 8'-3 | 4'-2 |
| | 7' | 8" | 8" | #4 | 11" | 7'-9 | #4 | 11" | 16'-3 | 118 | #4 | 11" | 27'-9 | 5'-1 | 2'-3 | 5½" | 3'-6 | #5 | 11" | 14'-0 | #5 | 11" | 21'-0 | 40 | #4 | 5½" | 8'-9 | 4'-2 |
| 8' | 3' | 8½" | 9" | #4 | 12" | 4'-0 | #4 | 6" | 8'-6 | 88 | #5 | 12" | 34'-6 | 5'-8 | 3'-4 | 6" | 4'-5 | #5 | 12" | 18'-3 | #6 | 12" | 27'-6 | 48 | #5 | 6" | 8'-0 | 5'-3 |
| | 4' | 8½" | 9" | #4 | 12" | 5'-0 | #4 | 6" | 10'-6 | 98 | #5 | 12" | 34'-9 | 5'-10 | 3'-4 | 6" | 4'-5 | #6 | 12" | 18'-6 | #6 | 12" | 27'-6 | 56 | #5 | 6" | 8'-6 | 5'-3 |
| | 5' | 9" | 9" | #4 | 14" | 6'-0 | #4 | 7" | 12'-6 | 98 | #6 | 14" | 35'-0 | 6'-0 | 3'-0 | 6½" | 4'-8 | #6 | 14" | 18'-6 | #6 | 14" | 27'-6 | 56 | #5 | 7" | 9'-0 | 5'-3 |
| | 6' | 9" | 9" | #4 | 14" | 7'-0 | #4 | 7" | 14'-6 | 108 | #6 | 14" | 35'-0 | 6'-0 | 3'-0 | 6½" | 4'-8 | #6 | 14" | 18'-6 | #6 | 14" | 27'-6 | 56 | #5 | 7" | 9'-6 | 5'-3 |
| | 7' | 9" | 9" | #4 | 14" | 8'-0 | #4 | 7" | 16'-6 | 118 | #6 | 14" | 35'-0 | 5'-10 | 3'-4 | 6½" | 4'-4 | #6 | 14" | 18'-6 | #6 | 14" | 27'-6 | 56 | #5 | 7" | 10'-0 | 5'-3 |
| | 8' | 9" | 9" | #4 | 14" | 9'-0 | #4 | 7" | 18'-6 | 118 | #6 | 14" | 35'-6 | 6'-2 | 3'-4 | 6½" | 4'-4 | #6 | 14" | 18'-6 | #6 | 14" | 27'-6 | 56 | #5 | 7" | 10'-6 | 5'-3 |
| 10' | 3' | 10" | 10" | #4 | 11" | 4'-3 | #5 | 5½" | 9'-0 | 88 | #6 | 11" | 42'-6 | 6'-11 | 4'-2 | 7½" | 5'-5 | #5 | 11" | 22'-6 | #6 | 11" | 34'-0 | 64 | #5 | 5½" | 9'-3 | 6'-6 |
| | 4' | 10½" | 10" | #4 | 11" | 5'-3 | #5 | 5½" | 11'-0 | 98 | #6 | 11" | 42'-6 | 6'-10 | 4'-2 | 8" | 5'-4 | #5 | 11" | 22'-6 | #6 | 11" | 34'-0 | 64 | #5 | 5½" | 9'-9 | 6'-6 |
| | 5' | 10½" | 10" | #4 | 11" | 6'-3 | #6 | 11" | 13'-0 | 98 | #6 | 11" | 43'-0 | 7'-1 | 4'-2 | 8" | 5'-4 | #5 | 11" | 22'-6 | #6 | 11" | 34'-0 | 64 | #5 | 5½" | 10'-3 | 6'-6 |
| | 6' | 10½" | 10" | #4 | 13" | 7'-3 | #5 | 6½" | 15'-0 | 108 | #6 | 13" | 43'-0 | 7'-2 | 4'-0 | 8" | 5'-6 | #6 | 13" | 22'-9 | #7 | 13" | 34'-0 | 64 | #5 | 6½" | 10'-9 | 6'-6 |
| | 7' | 10½" | 10" | #4 | 13" | 8'-3 | #5 | 6½" | 17'-0 | 118 | #6 | 13" | 43'-0 | 7'-2 | 4'-0 | 8" | 5'-6 | #6 | 13" | 22'-9 | #7 | 13" | 34'-0 | 64 | #5 | 6½" | 11'-3 | 6'-6 |
| | 8' | 10½" | 10" | #4 | 13" | 9'-3 | #6 | 13" | 19'-0 | 118 | #6 | 13" | 43'-0 | 7'-2 | 4'-0 | 8" | 5'-6 | #6 | 13" | 22'-9 | #7 | 13" | 34'-0 | 64 | #5 | 6½" | 11'-9 | 6'-6 |
| | 9' | 10½" | 10" | #4 | 13" | 10'-3 | #6 | 13" | 21'-0 | 128 | #6 | 13" | 43'-0 | 7'-2 | 4'-0 | 8" | 5'-6 | #6 | 13" | 22'-9 | #7 | 13" | 34'-0 | 64 | #5 | 6½" | 12'-3 | 6'-6 |
| | 10' | 10½" | 10" | #4 | 13" | 11'-3 | #4 | 6½" | 23'-0 | 138 | #6 | 13" | 43'-0 | 7'-2 | 4'-0 | 8" | 5'-6 | #6 | 13" | 22'-9 | #7 | 13" | 34'-0 | 64 | #5 | 6½" | 12'-9 | 6'-6 |
| 12' | 8' | 12½" | 12" | #4 | 11" | 9'-6 | #5 | 5½" | 20'-0 | 118 | #6 | 11" | 51'-0 | 8'-2 | 5'-0 | 10" | 6'-4 | #6 | 11" | 27'-0 | #7 | 11" | 40'-0 | 80 | #5 | 5½" | 13'-3 | 7'-8 |
| | 9' | 12½" | 12" | #4 | 11" | 10'-6 | #5 | 5½" | 22'-0 | 128 | #6 | 11" | 51'-6 | 8'-5 | 5'-0 | 10" | 6'-4 | #6 | 11" | 27'-0 | #7 | 11" | 40'-0 | 80 | #5 | 5½" | 13'-9 | 7'-8 |
| | 10' | 12½" | 12" | #4 | 12" | 11'-6 | #5 | 6" | 24'-0 | 138 | #7 | 12" | 51'-9 | 8'-6 | 5'-0 | 10" | 6'-4 | #6 | 12" | 27'-0 | #7 | 12" | 40'-0 | 80 | #5 | 6" | 14'-3 | 7'-8 |
| | 11' | 12½" | 12" | #4 | 12" | 12'-6 | #5 | 6" | 26'-0 | 138 | #7 | 12" | 51'-9 | 8'-6 | 5'-0 | 10" | 6'-4 | #6 | 12" | 27'-0 | #7 | 12" | 40'-0 | 80 | #5 | 6" | 14'-9 | 7'-8 |
| | 12' | 12½" | 12" | #4 | 12" | 13'-6 | #5 | 6" | 28'-0 | 148 | #7 | 12" | 51'-3 | 8'-3 | 5'-0 | 10" | 6'-4 | #6 | 12" | 27'-0 | #7 | 12" | 40'-0 | 80 | #5 | 6" | 15'-3 | 7'-8 |

⌖ Total number of bars in the cross-section.

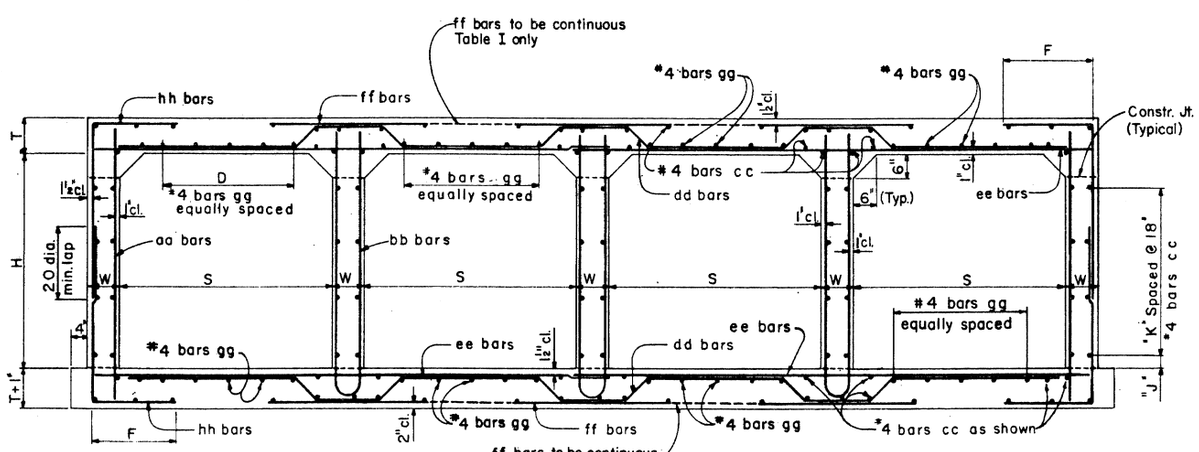


TYPICAL SECTION

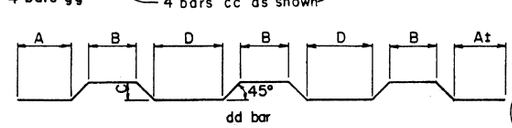


BENDS

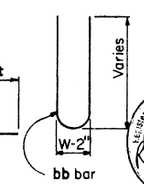


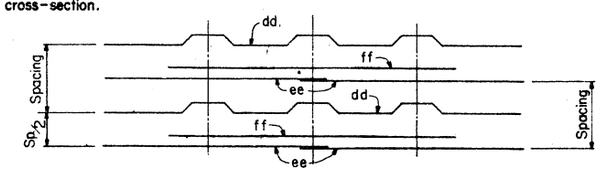


REINFORCING BAR PLACING DIAGRAM
For Table I only

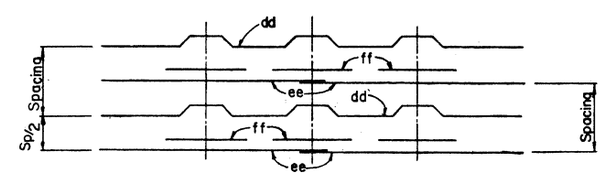


REINFORCING BAR PLACING DIAGRAM
For Tables II through V

| Height "H" | "J" Dim. | "K" Spaces |
|---|---|---|
| 3' | 9" | 1 |
| 4' | 3" | 2 |
| 5' | 12" | 2 |
| 6' | 9" | 3 |
| 7' | 3" | 4 |
| 8' | 12" | 4 |
| 9' | 9" | 5 |
| 10' | 3" | 6 |
| 11' | 12" | 6 |
| 12' | 9" | 7 |

NOTE:
See B-02.45 for Tables II thru V
See B-01.10 for general notes and miscellaneous details.
All bend dimensions are out to out of bar.

| NO. | DESCRIPTION OF REVISIONS | MADE BY | DATE |
|---|---|---|---|
| 1 | Table I, ff bars & quantities | J.T.W. | 7-76 |

| | | |
|---|---|---|
| DESIGN | DRY | 12-71 |
| DRAWN | CAG | 8-72 |
| CHECKED | MAB | 3-73 |

DESIGN APPROVED
R. C. Beckler
APPROVED FOR DISTRIBUTION
E. J. Bendlin

ARIZONA
DEPARTMENT OF TRANSPORTATION
HIGHWAYS DIVISION
STANDARD PLANS

FOUR BARREL
BOX CULVERT

REVISION

STANDARD NO. CB-4
PLAN NO. B-02.40

## TABLE NO. II
10'-15' FILL

| Span "S" | Height "H" | Top Slab "T" | Walls "W" | aa Size | aa Spacing | aa Length | bb Size | bb Spacing | bb Length | cc ⊕Number | dd Size | dd Spacing | dd Length | dd A | dd B | dd C | dd D | ee Size | ee Spacing | ee Length | ff Size | ff Spacing | ff Length | gg ⊕Number | hh Size | hh Spacing | hh Length | hh F |
|---|---|---|---|---|---|---|---|---|---|---|---|---|---|---|---|---|---|---|---|---|---|---|---|---|---|---|---|---|
| 6' | 3' | 8" | 8" | #4 | 12" | 3'-9 | #4 | 12" | 8'-0 | 88 | #5 | 12" | 26'-6 | 4'-5 | 2'-6 | 5" | 3'-4 | #4 | 12" | 14'-0 | #5 | 12" | 4'-9 | 40 | #4 | 6" | 4'-3 | 1'-9 |
| | 4' | 8" | 8" | #4 | 12" | 4'-9 | #4 | 12" | 10'-0 | 98 | #5 | 12" | 27'-0 | 4'-8 | 2'-6 | 5" | 3'-4 | #4 | 12" | 14'-0 | #5 | 12" | 4'-9 | 40 | #4 | 6" | 4'-9 | 1'-9 |
| | 5' | 8" | 8" | #4 | 12" | 5'-9 | #4 | 12" | 12'-0 | 98 | #5 | 12" | 27'-0 | 4'-8 | 2'-6 | 5" | 3'-4 | #4 | 12" | 14'-0 | #5 | 12" | 4'-9 | 40 | #4 | 6" | 5'-3 | 1'-9 |
| | 6' | 8" | 8" | #4 | 11" | 6'-9 | #4 | 11" | 14'-0 | 108 | #5 | 11" | 27'-0 | 4'-8 | 2'-6 | 5" | 3'-4 | #4 | 11" | 14'-0 | #5 | 11" | 4'-9 | 40 | #4 | 5½" | 5'-9 | 1'-9 |
| | 7' | 8" | 8" | #4 | 11" | 7'-9 | #4 | 11" | 16'-0 | 118 | #5 | 11" | 27'-0 | 4'-8 | 2'-6 | 5" | 3'-4 | #4 | 11" | 14'-0 | #5 | 11" | 4'-9 | 40 | #4 | 5½" | 6'-3 | 1'-9 |
| 8' | 3' | 10" | 9" | #4 | 12" | 4'-3 | #4 | 12" | 9'-0 | 88 | #6 | 12" | 35'-3 | 6'-0 | 3'-0 | 7½" | 4'-6 | #5 | 12" | 18'-6 | #6 | 12" | 6'-3 | 48 | #5 | 6" | 5'-0 | 2'-3 |
| | 4' | 10" | 9" | #4 | 12" | 5'-3 | #4 | 12" | 11'-0 | 98 | #6 | 12" | 35'-9 | 6'-3 | 3'-0 | 7½" | 4'-6 | #5 | 12" | 18'-6 | #6 | 12" | 6'-3 | 48 | #4 | 6" | 5'-3 | 2'-0 |
| | 5' | 10" | 9" | #4 | 12" | 6'-3 | #4 | 12" | 13'-0 | 98 | #6 | 12" | 35'-9 | 6'-3 | 3'-0 | 7½" | 4'-6 | #5 | 12" | 18'-6 | #6 | 12" | 6'-3 | 48 | #4 | 6" | 5'-9 | 2'-0 |
| | 6' | 10" | 9" | #4 | 12" | 7'-3 | #4 | 12" | 15'-0 | 108 | #6 | 12" | 35'-9 | 6'-3 | 3'-0 | 7½" | 4'-6 | #5 | 12" | 18'-6 | #6 | 12" | 6'-3 | 48 | #4 | 6" | 6'-3 | 2'-0 |
| | 7' | 10" | 9" | #4 | 12" | 8'-3 | #4 | 12" | 17'-0 | 118 | #6 | 12" | 35'-9 | 6'-3 | 3'-0 | 7½" | 4'-6 | #5 | 12" | 18'-6 | #6 | 12" | 6'-3 | 48 | #4 | 6" | 6'-9 | 2'-0 |
| | 8' | 10" | 9" | #4 | 12" | 9'-3 | #4 | 12" | 19'-0 | 118 | #6 | 12" | 35'-9 | 6'-3 | 3'-0 | 7½" | 4'-6 | #5 | 12" | 18'-6 | #6 | 12" | 6'-3 | 48 | #5 | 6" | 7'-6 | 2'-3 |
| 10' | 3' | 12" | 10" | #4 | 11" | 4'-6 | #4 | 11" | 9'-6 | 88 | #6 | 11" | 43'-3 | 7'-3 | 3'-6 | 9½" | 5'-9 | #5 | 11" | 22'-6 | #7 | 11" | 7'-6 | 56 | #5 | 5½" | 5'-3 | 2'-3 |
| | 4' | 12" | 10" | #4 | 11" | 5'-6 | #4 | 11" | 11'-6 | 98 | #6 | 11" | 43'-3 | 7'-3 | 3'-6 | 9½" | 5'-9 | #5 | 11" | 22'-6 | #7 | 11" | 7'-6 | 56 | #5 | 5½" | 5'-9 | 2'-3 |
| | 5' | 12½" | 10" | #4 | 11" | 6'-6 | #4 | 11" | 13'-6 | 98 | #6 | 11" | 43'-9 | 7'-5 | 3'-6 | 10" | 5'-8 | #5 | 11" | 22'-6 | #7 | 11" | 7'-6 | 56 | #5 | 5½" | 6'-3 | 2'-3 |
| | 6' | 12½" | 10" | #4 | 11" | 7'-6 | #4 | 11" | 15'-6 | 108 | #6 | 11" | 43'-9 | 7'-5 | 3'-6 | 10" | 5'-8 | #5 | 11" | 22'-6 | #7 | 11" | 7'-6 | 56 | #4 | 5½" | 6'-9 | 2'-3 |
| | 7' | 12½" | 10" | #4 | 11" | 8'-6 | #4 | 11" | 17'-6 | 118 | #6 | 11" | 43'-9 | 7'-5 | 3'-6 | 10" | 5'-8 | #5 | 11" | 22'-6 | #7 | 11" | 7'-6 | 56 | #4 | 5½" | 7'-3 | 2'-3 |
| | 8' | 12½" | 10" | #4 | 13" | 9'-6 | #4 | 13" | 19'-6 | 118 | #7 | 13" | 44'-3 | 7'-8 | 3'-6 | 10" | 5'-8 | #6 | 13" | 22'-9 | #7 | 13" | 7'-6 | 56 | #5 | 6½" | 7'-9 | 2'-3 |
| | 9' | 12½" | 10" | #4 | 13" | 10'-6 | #4 | 13" | 21'-6 | 128 | #7 | 13" | 44'-3 | 7'-8 | 3'-6 | 10" | 5'-8 | #6 | 13" | 22'-9 | #7 | 13" | 7'-6 | 56 | #5 | 6½" | 8'-3 | 2'-3 |
| | 10' | 12½" | 10" | #4 | 13" | 11'-6 | #4 | 13" | 23'-6 | 138 | #7 | 13" | 44'-3 | 7'-8 | 3'-6 | 10" | 5'-8 | #6 | 13" | 22'-9 | #7 | 13" | 7'-6 | 56 | #5 | 6½" | 9'-0 | 2'-6 |
| 12' | 8' | 15" | 12" | #4 | 11" | 10'-0 | #4 | 11" | 20'-6 | 118 | #6 | 11" | 52'-0 | 8'-5 | 4'-6 | 12½" | 6'-5 | #6 | 11" | 27'-0 | #8 | 11" | 9'-0 | 64 | #5 | 5½" | 8'-3 | 2'-6 |
| | 9' | 15" | 12" | #4 | 11" | 11'-0 | #4 | 11" | 22'-6 | 128 | #6 | 11" | 52'-9 | 8'-9 | 4'-6 | 12½" | 6'-5 | #6 | 11" | 27'-0 | #8 | 11" | 9'-0 | 64 | #5 | 5½" | 8'-9 | 2'-6 |
| | 10' | 15" | 12" | #4 | 11" | 12'-0 | #4 | 11" | 24'-6 | 138 | #6 | 11" | 52'-0 | 8'-5 | 4'-6 | 12½" | 6'-5 | #6 | 11" | 27'-0 | #8 | 11" | 9'-0 | 64 | #5 | 5½" | 9'-6 | 2'-9 |
| | 11' | 15" | 12" | #4 | 11" | 13'-0 | #4 | 11" | 26'-6 | 138 | #6 | 11" | 52'-0 | 8'-5 | 4'-6 | 12½" | 6'-5 | #6 | 11" | 27'-0 | #8 | 11" | 9'-0 | 64 | #5 | 5½" | 10'-0 | 2'-9 |
| | 12' | 15" | 12" | #4 | 11" | 14'-0 | #4 | 11" | 28'-6 | 148 | #6 | 11" | 52'-0 | 8'-5 | 4'-6 | 12½" | 6'-5 | #6 | 11" | 27'-0 | #8 | 11" | 9'-0 | 64 | #5 | 5½" | 10'-9 | 3'-0 |

## TABLE NO. III
15'-20' FILL

| Span "S" | Height "H" | Top Slab "T" | Walls "W" | aa Size | aa Spacing | aa Length | bb Size | bb Spacing | bb Length | cc ⊕Number | dd Size | dd Spacing | dd Length | dd A | dd B | dd C | dd D | ee Size | ee Spacing | ee Length | ff Size | ff Spacing | ff Length | gg ⊕Number | hh Size | hh Spacing | hh Length | hh F |
|---|---|---|---|---|---|---|---|---|---|---|---|---|---|---|---|---|---|---|---|---|---|---|---|---|---|---|---|---|
| 6' | 3' | 9" | 8" | #4 | 11" | 4'-0 | #4 | 11" | 8'-6 | 88 | #5 | 11" | 27'-6 | 4'-7 | 2'-6 | 6½" | 3'-1 | #4 | 11" | 14'-0 | #5 | 11" | 4'-9 | 32 | #4 | 5½" | 4'-3 | 1'-8 |
| | 4' | 9" | 8" | #4 | 11" | 5'-0 | #4 | 11" | 10'-6 | 98 | #5 | 11" | 27'-6 | 4'-7 | 2'-6 | 6½" | 3'-1 | #4 | 11" | 14'-0 | #5 | 11" | 4'-9 | 32 | #4 | 5½" | 4'-9 | 1'-8 |
| | 5' | 9" | 8" | #4 | 11" | 6'-0 | #4 | 11" | 12'-6 | 98 | #5 | 11" | 27'-6 | 4'-7 | 2'-6 | 6½" | 3'-1 | #4 | 11" | 14'-0 | #5 | 11" | 4'-9 | 32 | #4 | 5½" | 5'-3 | 1'-8 |
| | 6' | 9" | 8" | #4 | 11" | 7'-0 | #4 | 11" | 14'-6 | 108 | #5 | 11" | 27'-6 | 4'-7 | 2'-6 | 6½" | 3'-1 | #4 | 11" | 14'-0 | #5 | 11" | 4'-9 | 32 | #4 | 5½" | 5'-9 | 1'-8 |
| | 7' | 9" | 8" | #4 | 11" | 8'-0 | #4 | 11" | 16'-6 | 118 | #5 | 11" | 27'-6 | 4'-7 | 2'-6 | 6½" | 3'-1 | #4 | 11" | 14'-0 | #5 | 11" | 4'-9 | 32 | #4 | 5½" | 6'-3 | 1'-8 |
| 8' | 3' | 11½" | 9" | #4 | 12" | 4'-6 | #4 | 12" | 9'-6 | 88 | #6 | 12" | 36'-0 | 6'-1 | 3'-0 | 9" | 4'-3 | #5 | 12" | 18'-6 | #6 | 12" | 6'-3 | 48 | #4 | 6" | 4'-6 | 1'-9 |
| | 4' | 11½" | 9" | #4 | 12" | 5'-6 | #4 | 12" | 11'-6 | 98 | #6 | 12" | 36'-0 | 6'-1 | 3'-0 | 9" | 4'-3 | #5 | 12" | 18'-6 | #6 | 12" | 6'-3 | 48 | #4 | 6" | 5'-0 | 1'-9 |
| | 5' | 11½" | 9" | #4 | 13" | 6'-6 | #4 | 13" | 13'-6 | 98 | #6 | 13" | 36'-0 | 6'-1 | 3'-0 | 9" | 4'-3 | #5 | 13" | 18'-6 | #7 | 13" | 6'-6 | 48 | #5 | 6½" | 6'-0 | 2'-0 |
| | 6' | 11½" | 9" | #4 | 13" | 7'-6 | #4 | 13" | 15'-6 | 108 | #6 | 13" | 36'-0 | 6'-1 | 3'-0 | 9" | 4'-3 | #5 | 13" | 18'-6 | #7 | 13" | 6'-6 | 48 | #5 | 6½" | 6'-6 | 2'-0 |
| | 7' | 11½" | 9" | #4 | 13" | 8'-6 | #4 | 13" | 17'-6 | 118 | #6 | 13" | 36'-0 | 6'-1 | 3'-0 | 9" | 4'-3 | #5 | 13" | 18'-6 | #7 | 13" | 6'-6 | 48 | #5 | 6½" | 7'-0 | 2'-0 |
| | 8' | 11½" | 9" | #4 | 13" | 9'-6 | #4 | 13" | 19'-6 | 118 | #6 | 13" | 36'-0 | 6'-4 | 2'-6 | 9" | 4'-9 | #6 | 13" | 18'-6 | #7 | 13" | 6'-6 | 48 | #5 | 6½" | 7'-9 | 2'-4 |
| 10' | 3' | 14½" | 10" | #4 | 13" | 5'-0 | #4 | 13" | 10'-6 | 88 | #6 | 13" | 44'-3 | 7'-7 | 3'-0 | 1'-0 | 5'-10 | #6 | 13" | 22'-9 | #8 | 13" | 7'-9 | 56 | #5 | 6½" | 5'-3 | 2'-0 |
| | 4' | 14½" | 10" | #4 | 13" | 6'-0 | #4 | 13" | 12'-6 | 98 | #6 | 13" | 44'-3 | 7'-7 | 3'-0 | 1'-0 | 5'-10 | #6 | 13" | 22'-9 | #8 | 13" | 7'-9 | 56 | #5 | 6½" | 5'-9 | 2'-0 |
| | 5' | 15" | 10" | #4 | 13" | 7'-0 | #4 | 13" | 14'-6 | 98 | #6 | 13" | 45'-0 | 7'-10 | 3'-0 | 1'-0½ | 5'-9 | #6 | 13" | 22'-9 | #8 | 13" | 7'-9 | 56 | #5 | 6½" | 6'-3 | 2'-0 |
| | 6' | 15" | 10" | #4 | 13" | 8'-0 | #4 | 13" | 16'-6 | 108 | #6 | 13" | 45'-0 | 7'-10 | 3'-0 | 1'-0½ | 5'-9 | #6 | 13" | 22'-9 | #8 | 13" | 7'-9 | 56 | #5 | 6½" | 6'-9 | 2'-0 |
| | 7' | 15" | 10" | #4 | 13" | 9'-0 | #4 | 13" | 18'-6 | 118 | #6 | 13" | 45'-0 | 7'-10 | 3'-0 | 1'-0½ | 5'-9 | #6 | 13" | 22'-9 | #8 | 13" | 7'-9 | 56 | #5 | 6½" | 7'-3 | 2'-0 |
| | 8' | 15" | 10" | #4 | 13" | 10'-0 | #4 | 13" | 20'-6 | 118 | #6 | 13" | 45'-0 | 7'-10 | 3'-0 | 1'-0½ | 5'-9 | #6 | 13" | 22'-9 | #8 | 13" | 7'-9 | 56 | #5 | 6½" | 7'-9 | 2'-0 |
| | 9' | 15" | 10" | #4 | 13" | 11'-0 | #4 | 13" | 22'-6 | 128 | #6 | 13" | 44'-6 | 7'-8 | 3'-0 | 1'-0½ | 5'-9 | #6 | 13" | 22'-9 | #8 | 13" | 7'-9 | 56 | #5 | 6½" | 8'-6 | 2'-4 |
| | 10' | 15" | 10" | #4 | 12" | 12'-0 | #4 | 12" | 24'-6 | 138 | #6 | 12" | 44'-6 | 7'-8 | 3'-0 | 1'-0½ | 5'-9 | #6 | 12" | 22'-9 | #8 | 12" | 7'-9 | 56 | #5 | 6" | 9'-0 | 2'-4 |
| 12' | 8' | 18" | 12" | #4 | 12" | 10'-6 | #4 | 12" | 21'-6 | 118 | #7 | 12" | 53'-9 | 9'-0 | 4'-0 | 1'-3½ | 6'-5 | #6 | 12" | 27'-0 | #8 | 12" | 9'-0 | 64 | #5 | 6" | 8'-3 | 2'-4 |
| | 9' | 18" | 12" | #4 | 12" | 11'-6 | #4 | 12" | 23'-6 | 128 | #7 | 12" | 53'-9 | 9'-0 | 4'-0 | 1'-3½ | 6'-5 | #6 | 12" | 27'-0 | #8 | 12" | 9'-0 | 64 | #5 | 6" | 9'-0 | 2'-6 |
| | 10' | 18" | 12" | #4 | 12" | 12'-6 | #4 | 12" | 25'-6 | 138 | #7 | 12" | 53'-9 | 9'-0 | 4'-0 | 1'-3½ | 6'-5 | #6 | 12" | 27'-0 | #8 | 12" | 9'-0 | 64 | #5 | 6" | 9'-6 | 2'-6 |
| | 11' | 18" | 12" | #4 | 12" | 13'-6 | #4 | 12" | 27'-6 | 138 | #7 | 12" | 53'-9 | 9'-0 | 4'-0 | 1'-3½ | 6'-5 | #6 | 12" | 27'-0 | #8 | 12" | 9'-0 | 64 | #5 | 6" | 10'-0 | 2'-6 |
| | 12' | 18" | 12" | #5 | 12" | 14'-6 | #4 | 12" | 29'-6 | 148 | #7 | 12" | 53'-9 | 9'-0 | 4'-0 | 1'-3½ | 6'-5 | #6 | 12" | 27'-0 | #8 | 12" | 9'-0 | 64 | #5 | 6" | 11'-0 | 3'-0 |

## TABLE NO. IV
20'-25' FILL

| Span "S" | Height "H" | Top Slab "T" | Walls "W" | aa Size | aa Spacing | aa Length | bb Size | bb Spacing | bb Length | cc ⊕Number | dd Size | dd Spacing | dd Length | dd A | dd B | dd C | dd D | ee Size | ee Spacing | ee Length | ff Size | ff Spacing | ff Length | gg ⊕Number | hh Size | hh Spacing | hh Length | hh F |
|---|---|---|---|---|---|---|---|---|---|---|---|---|---|---|---|---|---|---|---|---|---|---|---|---|---|---|---|---|
| 6' | 3' | 10½" | 8" | #4 | 11" | 4'-3 | #4 | 11" | 9'-0 | 88 | #5 | 11" | 28'-3 | 4'-8 | 2'-6 | 8" | 2'-10 | #4 | 11" | 14'-0 | #5 | 11" | 5'-3 | 32 | #4 | 5½" | 4'-3 | 1'-6 |
| | 4' | 10½" | 8" | #4 | 11" | 5'-3 | #4 | 11" | 11'-0 | 98 | #5 | 11" | 28'-3 | 4'-8 | 2'-6 | 8" | 2'-10 | #4 | 11" | 14'-0 | #5 | 11" | 5'-3 | 32 | #4 | 5½" | 4'-9 | 1'-6 |
| | 5' | 10½" | 8" | #4 | 11" | 6'-3 | #4 | 11" | 13'-0 | 98 | #5 | 11" | 28'-3 | 4'-8 | 2'-6 | 8" | 2'-10 | #4 | 11" | 14'-0 | #5 | 11" | 5'-3 | 32 | #4 | 5½" | 5'-3 | 1'-6 |
| | 6' | 10½" | 8" | #4 | 11" | 7'-3 | #4 | 11" | 15'-0 | 108 | #5 | 11" | 28'-3 | 4'-8 | 2'-6 | 8" | 2'-10 | #4 | 11" | 14'-0 | #5 | 11" | 4'-9 | 32 | #4 | 5½" | 6'-0 | 1'-9 |
| | 7' | 10½" | 8" | #4 | 11" | 8'-3 | #4 | 11" | 17'-0 | 118 | #5 | 11" | 28'-3 | 4'-8 | 2'-6 | 8" | 2'-10 | #4 | 11" | 14'-0 | #5 | 11" | 4'-9 | 32 | #4 | 5½" | 6'-6 | 1'-9 |
| 8' | 3' | 13½" | 9" | #4 | 11" | 4'-9 | #4 | 11" | 10'-0 | 88 | #5 | 11" | 36'-6 | 5'-11 | 3'-0 | 11" | 3'-11 | #5 | 11" | 18'-6 | #7 | 11" | 6'-6 | 40 | #4 | 5½" | 4'-6 | 1'-6 |
| | 4' | 13½" | 9" | #4 | 11" | 5'-9 | #4 | 11" | 12'-0 | 98 | #5 | 11" | 36'-6 | 5'-11 | 3'-0 | 11" | 3'-11 | #5 | 11" | 18'-6 | #7 | 11" | 6'-6 | 40 | #4 | 5½" | 5'-0 | 1'-6 |
| | 5' | 13½" | 9" | #4 | 11" | 6'-9 | #4 | 11" | 14'-0 | 98 | #5 | 11" | 36'-6 | 5'-11 | 3'-0 | 11" | 3'-11 | #5 | 11" | 18'-6 | #7 | 11" | 6'-6 | 40 | #4 | 5½" | 5'-6 | 1'-6 |
| | 6' | 13½" | 9" | #4 | 11" | 7'-9 | #4 | 11" | 16'-0 | 108 | #5 | 11" | 36'-6 | 5'-11 | 3'-0 | 11" | 3'-11 | #5 | 11" | 18'-6 | #7 | 11" | 6'-6 | 40 | #4 | 5½" | 6'-3 | 1'-9 |
| | 7' | 13½" | 9" | #4 | 11" | 8'-9 | #4 | 11" | 18'-0 | 118 | #5 | 11" | 36'-6 | 5'-11 | 3'-0 | 11" | 3'-11 | #5 | 11" | 18'-6 | #7 | 11" | 6'-6 | 40 | #4 | 5½" | 6'-9 | 1'-9 |
| | 8' | 13½" | 9" | #4 | 12" | 9'-9 | #4 | 12" | 20'-0 | 118 | #5 | 12" | 36'-6 | 5'-11 | 3'-0 | 11" | 3'-11 | #5 | 12" | 18'-6 | #7 | 12" | 6'-6 | 40 | #5 | 6" | 7'-3 | 1'-9 |
| 10' | 3' | 16½" | 10" | #4 | 12" | 5'-3 | #4 | 12" | 11'-0 | 88 | #6 | 12" | 45'-3 | 7'-8 | 3'-0 | 1'-2 | 5'-6 | #6 | 12" | 22'-9 | #8 | 12" | 7'-9 | 56 | #5 | 6" | 5'-0 | 1'-9 |
| | 4' | 17" | 10" | #4 | 12" | 6'-3 | #4 | 12" | 13'-0 | 98 | #6 | 12" | 45'-6 | 7'-8 | 3'-0 | 1'-2½ | 5'-5 | #6 | 12" | 22'-9 | #8 | 12" | 7'-9 | 56 | #4 | 6" | 5'-6 | 1'-9 |
| | 5' | 17" | 10" | #4 | 12" | 7'-3 | #4 | 12" | 15'-0 | 98 | #6 | 12" | 45'-6 | 7'-8 | 3'-0 | 1'-2½ | 5'-5 | #6 | 12" | 22'-9 | #8 | 12" | 7'-9 | 56 | #4 | 6" | 6'-0 | 1'-9 |
| | 6' | 17" | 10" | #4 | 12" | 8'-3 | #4 | 12" | 17'-0 | 108 | #6 | 12" | 45'-6 | 7'-8 | 3'-0 | 1'-2½ | 5'-5 | #6 | 12" | 22'-9 | #8 | 12" | 7'-9 | 56 | #4 | 6" | 6'-6 | 1'-9 |
| | 7' | 17" | 10" | #4 | 12" | 9'-3 | #4 | 12" | 19'-0 | 118 | #6 | 12" | 45'-6 | 7'-8 | 3'-0 | 1'-2½ | 5'-5 | #6 | 12" | 22'-9 | #8 | 12" | 7'-9 | 56 | #4 | 6" | 7'-3 | 2'-0 |
| | 8' | 17" | 10" | #4 | 12" | 10'-3 | #4 | 12" | 21'-0 | 118 | #6 | 12" | 45'-6 | 7'-8 | 3'-0 | 1'-2½ | 5'-5 | #6 | 12" | 22'-9 | #8 | 12" | 7'-9 | 56 | #5 | 6" | 8'-0 | 2'-0 |
| | 9' | 17" | 10" | #4 | 12" | 11'-3 | #4 | 12" | 23'-0 | 128 | #6 | 12" | 45'-6 | 7'-8 | 3'-0 | 1'-2½ | 5'-5 | #6 | 12" | 22'-9 | #8 | 12" | 7'-9 | 56 | #5 | 6" | 8'-6 | 2'-0 |
| | 10' | 17" | 10" | #5 | 12" | 12'-3 | #4 | 12" | 25'-0 | 138 | #6 | 12" | 45'-6 | 7'-8 | 3'-0 | 1'-2½ | 5'-5 | #6 | 12" | 22'-9 | #8 | 12" | 7'-9 | 56 | #5 | 6" | 9'-0 | 2'-3 |
| 12' | 8' | 20½" | 12" | #4 | 15" | 11'-0 | #4 | 15" | 22'-6 | 118 | #6 | 10" | 54'-3 | 8'-9 | 4'-0 | 1'-6 | 6'-0 | #6 | 10" | 27'-0 | #8 | 10" | 9'-0 | 56 | #4 | 5" | 8'-3 | 2'-2 |
| | 9' | 20½" | 12" | #4 | 15" | 12'-0 | #4 | 15" | 24'-6 | 128 | #6 | 10" | 54'-3 | 8'-9 | 4'-0 | 1'-6 | 6'-0 | #6 | 10" | 27'-0 | #8 | 10" | 9'-0 | 56 | #5 | 5" | 9'-0 | 2'-4 |
| | 10' | 20½" | 12" | #4 | 10" | 13'-0 | #4 | 15" | 26'-6 | 138 | #6 | 10" | 54'-3 | 8'-9 | 4'-0 | 1'-6 | 6'-0 | #6 | 10" | 27'-0 | #8 | 10" | 9'-0 | 56 | #5 | 5" | 9'-9 | 2'-6 |
| | 11' | 20½" | 12" | #4 | 10" | 14'-0 | #4 | 15" | 28'-6 | 138 | #6 | 10" | 53'-9 | 8'-6 | 4'-0 | 1'-6 | 6'-0 | #6 | 10" | 27'-0 | #8 | 10" | 9'-0 | 56 | #5 | 5" | 10'-3 | 2'-6 |
| | 12' | 20½" | 12" | #4 | 10" | 15'-0 | #4 | 15" | 30'-6 | 148 | #6 | 10" | 53'-9 | 8'-6 | 4'-0 | 1'-6 | 6'-0 | #6 | 10" | 27'-0 | #8 | 10" | 9'-0 | 56 | #5 | 5" | 11'-0 | 2'-9 |

## TABLE NO. V
25'-30' FILL

| Span "S" | Height "H" | Top Slab "T" | Walls "W" | aa Size | aa Spacing | aa Length | bb Size | bb Spacing | bb Length | cc ⊕Number | dd Size | dd Spacing | dd Length | dd A | dd B | dd C | dd D | ee Size | ee Spacing | ee Length | ff Size | ff Spacing | ff Length | gg ⊕Number | hh Size | hh Spacing | hh Length | hh F |
|---|---|---|---|---|---|---|---|---|---|---|---|---|---|---|---|---|---|---|---|---|---|---|---|---|---|---|---|---|
| 6' | 3' | 11½" | 8" | #4 | 15" | 4'-6 | #4 | 15" | 9'-6 | 88 | #5 | 10" | 28'-9 | 5'-0 | 2'-0 | 9" | 3'-2 | #4 | 10" | 14'-0 | #5 | 10" | 5'-3 | 32 | #4 | 5" | 4'-3 | 1'-6 |
| | 4' | 11½" | 8" | #4 | 15" | 5'-6 | #4 | 15" | 11'-6 | 98 | #5 | 10" | 28'-9 | 5'-0 | 2'-0 | 9" | 3'-2 | #4 | 10" | 14'-0 | #5 | 10" | 5'-3 | 32 | #4 | 5" | 4'-9 | 1'-6 |
| | 5' | 11½" | 8" | #4 | 15" | 6'-6 | #4 | 15" | 13'-6 | 98 | #5 | 10" | 28'-9 | 5'-0 | 2'-0 | 9" | 3'-2 | #4 | 10" | 14'-0 | #5 | 10" | 5'-3 | 32 | #4 | 5" | 5'-3 | 1'-6 |
| | 6' | 11½" | 8" | #4 | 15" | 7'-6 | #4 | 15" | 15'-6 | 108 | #5 | 10" | 28'-9 | 5'-0 | 2'-0 | 9" | 3'-2 | #4 | 10" | 14'-0 | #5 | 10" | 4'-9 | 32 | #4 | 5" | 6'-0 | 1'-9 |
| | 7' | 11½" | 8" | #4 | 10" | 8'-6 | #4 | 15" | 17'-6 | 118 | #5 | 10" | 28'-9 | 5'-0 | 2'-0 | 9" | 3'-2 | #4 | 10" | 14'-0 | #5 | 10" | 4'-9 | 32 | #4 | 5" | 6'-6 | 1'-9 |
| 8' | 3' | 15½" | 9" | #4 | 11" | 5'-0 | #4 | 11" | 10'-9 | 88 | #5 | 11" | 37'-0 | 5'-10 | 3'-0 | 1'-1 | 3'-7 | #5 | 11" | 18'-6 | #7 | 11" | 7'-0 | 40 | #4 | 5½" | 4'-9 | 1'-8 |
| | 4' | 15½" | 9" | #4 | 11" | 6'-0 | #4 | 11" | 12'-9 | 98 | #5 | 11" | 37'-0 | 5'-10 | 3'-0 | 1'-1 | 3'-7 | #5 | 11" | 18'-6 | #7 | 11" | 7'-0 | 40 | #4 | 5½" | 5'-3 | 1'-8 |
| | 5' | 15½" | 9" | #4 | 11" | 7'-0 | #4 | 11" | 14'-9 | 98 | #5 | 11" | 37'-0 | 5'-10 | 3'-0 | 1'-1 | 3'-7 | #5 | 11" | 18'-6 | #7 | 11" | 6'-6 | 40 | #4 | 5½" | 5'-9 | 1'-8 |
| | 6' | 15½" | 9" | #4 | 11" | 8'-0 | #4 | 11" | 16'-9 | 108 | #5 | 11" | 37'-0 | 5'-10 | 3'-0 | 1'-1 | 3'-7 | #5 | 11" | 18'-6 | #7 | 11" | 6'-6 | 40 | #4 | 5½" | 6'-3 | 1-8 |
| | 7' | 15½" | 9" | #4 | 11" | 9'-0 | #4 | 11" | 18'-9 | 118 | #5 | 11" | 37'-0 | 5'-10 | 3'-0 | 1'-1 | 3'-7 | #5 | 11" | 18'-6 | #7 | 11" | 6'-6 | 40 | #4 | 5½" | 7'-0 | 1'-10 |
| | 8' | 15½" | 9" | #4 | 11" | 10'-0 | #4 | 11" | 20'-9 | 118 | #5 | 11" | 37'-0 | 5'-10 | 3'-0 | 1'-1 | 3'-7 | #5 | 11" | 18'-6 | #7 | 11" | 6'-6 | 40 | #5 | 5½" | 7'-9 | 2'-0 |
| 10' | 3' | 19" | 10" | #4 | 11" | 5'-9 | #4 | 11" | 11'-9 | 88 | #6 | 11" | 45'-9 | 7'-6 | 3'-0 | 1'-4½ | 5'-1 | #6 | 11" | 22'-9 | #8 | 11" | 7'-9 | 48 | #4 | 5½" | 5'-0 | 1'-7 |
| | 4' | 19" | 10" | #4 | 11" | 6'-9 | #4 | 11" | 13'-9 | 98 | #6 | 11" | 45'-9 | 7'-6 | 3'-0 | 1'-4½ | 5'-1 | #6 | 11" | 22'-9 | #8 | 11" | 7'-9 | 48 | #4 | 5½" | 5'-6 | 1'-7 |
| | 5' | 19" | 10" | #4 | 11" | 7'-9 | #4 | 11" | 15'-9 | 98 | #6 | 11" | 45'-9 | 7'-6 | 3'-0 | 1'-4½ | 5'-1 | #6 | 11" | 22'-9 | #8 | 11" | 7'-9 | 48 | #4 | 5½" | 6'-0 | 1'-7 |
| | 6' | 19" | 10" | #4 | 11" | 8'-9 | #4 | 11" | 17'-9 | 108 | #6 | 11" | 45'-9 | 7'-6 | 3'-0 | 1'-4½ | 5'-1 | #6 | 11" | 22'-9 | #8 | 11" | 7'-9 | 48 | #4 | 5½" | 6'-6 | 1'-7 |
| | 7' | 19" | 10" | #4 | 11" | 9'-9 | #4 | 11" | 19'-9 | 118 | #6 | 11" | 45'-9 | 7'-6 | 3'-0 | 1'-4½ | 5'-1 | #6 | 11" | 22'-9 | #8 | 11" | 7'-9 | 48 | #4 | 5½" | 7'-0 | 1'-7 |
| | 8' | 19" | 10" | #4 | 13" | 10'-9 | #4 | 13" | 21'-9 | 118 | #7 | 13" | 46'-3 | 7'-9 | 3'-0 | 1'-4½ | 5'-1 | #6 | 13" | 22'-9 | #8 | 13" | 7'-9 | 48 | #5 | 6½" | 8'-0 | 2'-0 |
| | 9' | 19" | 10" | #5 | 13" | 11'-9 | #4 | 13" | 23'-9 | 128 | #7 | 13" | 46'-3 | 7'-9 | 3'-0 | 1'-4½ | 5'-1 | #6 | 13" | 22'-9 | #8 | 13" | 7'-9 | 48 | #5 | 6½" | 8'-6 | 2'-0 |
| | 10' | 19" | 10" | #5 | 11" | 12'-9 | #4 | 11" | 25'-9 | 138 | #6 | 11" | 45'-9 | 7'-6 | 3'-0 | 1'-4½ | 5'-1 | #6 | 11" | 22'-9 | #8 | 11" | 7'-9 | 48 | #5 | 5½" | 9'-3 | 2'-3 |
| 12' | 8' | 23" | 12" | #4 | 10" | 11'-3 | #4 | 15" | 23'-0 | 118 | #6 | 10" | 54'-9 | 8'-7 | 4'-0 | 1'-8½ | 5'-7 | #6 | 10" | 27'-0 | #8 | 10" | 9'-0 | 56 | #4 | 5" | 8'-3 | 2'-0 |
| | 9' | 23" | 12" | #4 | 10" | 12'-3 | #4 | 15" | 25'-0 | 128 | #6 | 10" | 54'-9 | 8'-7 | 4'-0 | 1'-8½ | 5'-7 | #6 | 10" | 27'-0 | #8 | 10" | 9'-0 | 56 | #5 | 5" | 9'-3 | 2'-4 |
| | 10' | 23" | 12" | #4 | 10" | 13'-3 | #4 | 15" | 27'-0 | 138 | #6 | 10" | 54'-9 | 8'-7 | 4'-0 | 1'-8½ | 5'-7 | #6 | 10" | 27'-0 | #8 | 10" | 9'-0 | 56 | #5 | 5" | 9'-9 | 2'-4 |
| | 11' | 23" | 12" | #5 | 10" | 14'-3 | #4 | 15" | 29'-0 | 138 | #6 | 10" | 54'-9 | 8'-7 | 4'-0 | 1'-8½ | 5'-7 | #6 | 10" | 27'-0 | #8 | 10" | 9'-0 | 56 | #5 | 5" | 10'-6 | 2'-8 |
| | 12' | 23" | 12" | #6 | 10" | 15'-3 | #4 | 15" | 31'-0 | 148 | #6 | 10" | 54'-3 | 8'-3 | 4'-0 | 1'-8½ | 5'-7 | #6 | 10" | 27'-0 | #8 | 10" | 9'-0 | 56 | #5 | 5" | 11'-0 | 2'-8 |

⊕ Total number of bars in the cross-section.

NOTE:

See B-02.40 for Table No. I, typical section, steel call outs, bend diagrams and quantities.

See B-01.10 for general notes and miscellaneous details.

| DESIGN | DHY | 12-71 | NO. | DESCRIPTION OF REVISIONS | MADE BY | DATE |
|---|---|---|---|---|---|---|
| DRAWN | CAG | 8-72 | ① | Table II, 6' span, T now 8" | J T W | 7-76 |
| CHECKED | NAB | 3-73 | ② | | | |
| | | | ③ | | | |

DESIGN APPROVED R. C. Buchler

APPROVED FOR DISTRIBUTION [signature]

ARIZONA
DEPARTMENT OF TRANSPORTATION
HIGHWAYS DIVISION
STANDARD PLANS

FOUR BARREL
BOX CULVERT

REVISION

STANDARD NO. CB-4A

PLAN NO. B-02.45

## QUANTITIES PER LIN. FOOT OF BARRELS

| Span "S" | Height "H" | Table I Concrete C.Y. | Table I Reinf. Steel Lbs. | Table II Concrete C.Y. | Table II Reinf. Steel Lbs. | Table III Concrete C.Y. | Table III Reinf. Steel Lbs. | Table IV Concrete C.Y. | Table IV Reinf. Steel Lbs. | Table V Concrete C.Y. | Table V Reinf. Steel Lbs. |
|---|---|---|---|---|---|---|---|---|---|---|---|
| 6' | 3' | 2.293 | 383.2 | 2.293 | 314.0 | 2.505 | 330.4 | 2.823 | 339.1 | 3.035 | 352.5 |
| | 4' | 2.441 | 387.9 | 2.441 | 332.5 | 2.653 | 348.6 | 2.971 | 357.3 | 3.184 | 370.4 |
| | 5' | 2.590 | 398.1 | 2.590 | 341.8 | 2.801 | 358.8 | 3.119 | 367.5 | 3.331 | 377.6 |
| | 6' | 2.738 | 416.3 | 2.738 | 380.8 | 2.950 | 377.1 | 3.267 | 382.6 | 3.479 | 390.8 |
| | 7' | 2.886 | 464.0 | 2.886 | 399.0 | 3.098 | 395.3 | 3.416 | 400.8 | 3.628 | 411.9 |
| 8' | 3' | 3.038 | 526.9 | 3.453 | 491.3 | 3.868 | 476.8 | 4.422 | 494.9 | 4.975 | 508.9 |
| | 4' | 3.205 | 600.3 | 3.620 | 493.9 | 4.035 | 494.2 | 4.588 | 513.0 | 5.142 | 527.2 |
| | 5' | 3.510 | 582.5 | 3.787 | 503.2 | 4.202 | 522.0 | 4.755 | 523.3 | 5.309 | 528.4 |
| | 6' | 3.676 | 604.4 | 3.953 | 520.6 | 4.368 | 540.0 | 4.922 | 543.0 | 5.475 | 546.7 |
| | 7' | 3.843 | 626.3 | 4.120 | 538.0 | 4.535 | 558.0 | 5.088 | 561.2 | 5.642 | 566.3 |
| | 8' | 4.010 | 641.4 | 4.287 | 571.2 | 4.702 | 570.0 | 5.255 | 556.3 | 5.807 | 602.2 |
| 10' | 3' | 4.189 | 753.3 | 4.872 | 646.8 | 5.726 | 656.9 | 6.409 | 705.8 | 7.263 | 740.7 |
| | 4' | 4.545 | 785.6 | 5.058 | 666.6 | 5.912 | 674.9 | 6.765 | 709.6 | 7.449 | 758.9 |
| | 5' | 4.730 | 778.3 | 5.414 | 680.1 | 6.267 | 687.7 | 6.951 | 719.0 | 7.634 | 769.1 |
| | 6' | 4.916 | 827.7 | 5.599 | 677.8 | 6.453 | 705.7 | 7.136 | 736.4 | 7.819 | 787.3 |
| | 7' | 5.101 | 856.2 | 5.784 | 696.1 | 6.638 | 723.7 | 7.321 | 755.1 | 8.004 | 805.5 |
| | 8' | 5.286 | 835.7 | 5.969 | 747.2 | 6.823 | 733.8 | 7.506 | 789.8 | 8.189 | 798.6 |
| | 9' | 5.471 | 859.9 | 6.154 | 765.3 | 7.008 | 752.3 | 7.691 | 808.6 | 8.374 | 824.8 |
| | 10' | 5.656 | 870.0 | 6.340 | 785.2 | 7.193 | 821.3 | 7.875 | 833.7 | 8.560 | 897.2 |
| 12' | 8' | 7.148 | 1155.5 | 8.172 | 956.1 | 9.400 | 967.6 | 10.425 | 980.3 | 11.448 | 991.2 |
| | 9' | 7.370 | 1189.4 | 8.394 | 977.6 | 9.622 | 988.5 | 10.646 | 1030.8 | 11.670 | 1044.8 |
| | 10' | 7.593 | 1207.4 | 8.616 | 998.1 | 9.845 | 1007.4 | 10.868 | 1058.6 | 11.892 | 1063.7 |
| | 11' | 7.815 | 1229.6 | 8.838 | 1009.9 | 10.067 | 1018.2 | 11.091 | 1067.7 | 12.114 | 1089.9 |
| | 12' | 8.037 | 1257.8 | 9.061 | 1032.1 | 10.289 | 1081.7 | 11.313 | 1102.6 | 12.336 | 1124.7 |

## TABLE NO. I
## 0'-10' FILL

| Span "S" | Height "H" | Top Slab "T" | Walls "W" | aa Size | aa Spacing | aa Length | bb Size | bb Spacing | bb Length | cc Number ✠ | dd Size | dd Spacing | dd Length | A | B | C | D | E | ee & eei Size | ee & eei Spacing | ee Length | eei Length | ff Size | ff Spacing | ff Length | gg Number ✠ | hh Size | hh Spacing | hh Length | F |
|---|---|---|---|---|---|---|---|---|---|---|---|---|---|---|---|---|---|---|---|---|---|---|---|---|---|---|---|---|---|---|
| 6' | 3' | 8" | 8" | #4 | 11" | 3'-9 | #5 | 11" | 8'-3 | 108 | #4 | 11" | 18'-0 | 5'-0 | 2'-3 | 5½" | 3'-6 | 2'-4 | #5 | 11" | 20'-9 | 14'-3 | #5 | 11" | 27'-9 | 50 | #4 | 5½" | 6'-9 | 4'-2 |
| | 4' | 8" | 8" | #4 | 11" | 4'-9 | #4 | 11" | 10'-3 | 120 | #4 | 11" | 18'-0 | 5'-0 | 2'-3 | 5½" | 3'-6 | 2'-4 | #5 | 11" | 20'-9 | 14'-3 | #5 | 11" | 27'-9 | 50 | #4 | 5½" | 7'-3 | 4'-2 |
| | 5' | 8" | 8" | #4 | 11" | 5'-9 | #4 | 11" | 12'-3 | 120 | #4 | 11" | 18'-0 | 5'-0 | 2'-3 | 5½" | 3'-6 | 2'-4 | #5 | 11" | 20'-9 | 14'-3 | #5 | 11" | 27'-9 | 50 | #4 | 5½" | 7'-9 | 4'-2 |
| | 6' | 8" | 8" | #4 | 11" | 6'-9 | #4 | 11" | 14'-3 | 132 | #4 | 11" | 18'-0 | 5'-0 | 2'-3 | 5½" | 3'-6 | 2'-4 | #5 | 11" | 20'-9 | 14'-3 | #5 | 11" | 27'-9 | 50 | #4 | 5½" | 8'-3 | 4'-2 |
| | 7' | 8" | 8" | #4 | 11" | 7'-9 | #4 | 11" | 16'-3 | 144 | #5 | 11" | 18'-0 | 5'-0 | 2'-3 | 5½" | 3'-6 | 2'-4 | #5 | 11" | 20'-9 | 14'-3 | #5 | 11" | 27'-9 | 50 | #4 | 5½" | 8'-9 | 4'-2 |
| 8' | 3' | 8½" | 9" | #4 | 12" | 4'-0 | #4 | 6" | 8'-6 | 108 | #5 | 12" | 22'-6 | 5'-8 | 3'-4 | 6" | 4'-5 | 2'-11 | #5 | 12" | 27'-0 | 18'-3 | #6 | 12" | 36'-3 | 60 | #5 | 6" | 8'-0 | 5'-3 |
| | 4' | 8½" | 9" | #4 | 12" | 5'-0 | #4 | 6" | 10'-6 | 120 | #5 | 12" | 22'-9 | 5'-10 | 3'-4 | 6" | 4'-5 | 3'-0 | #6 | 12" | 27'-0 | 18'-3 | #6 | 12" | 36'-3 | 70 | #5 | 6" | 8'-6 | 5'-3 |
| | 5' | 9" | 9" | #4 | 14" | 6'-0 | #4 | 7" | 12'-6 | 120 | #6 | 14" | 22'-9 | 6'-0 | 3'-0 | 6½" | 4'-8 | 3'-0 | #6 | 14" | 27'-0 | 18'-3 | #6 | 14" | 36'-3 | 70 | #5 | 7" | 9'-0 | 5'-3 |
| | 6' | 9" | 9" | #4 | 14" | 7'-0 | #4 | 7" | 14'-6 | 132 | #6 | 14" | 22'-9 | 6'-0 | 3'-0 | 6½" | 4'-8 | 3'-0 | #6 | 14" | 27'-0 | 18'-3 | #6 | 14" | 36'-3 | 70 | #5 | 7" | 9'-6 | 5'-3 |
| | 7' | 9" | 9" | #4 | 14" | 8'-0 | #4 | 7" | 16'-6 | 144 | #6 | 14" | 22'-9 | 5'-10 | 3'-4 | 6½" | 4'-4 | 2'-10 | #6 | 14" | 27'-0 | 18'-3 | #6 | 14" | 36'-3 | 70 | #5 | 7" | 10'-0 | 5'-3 |
| | 8' | 9" | 9" | #4 | 14" | 9'-0 | #4 | 7" | 18'-6 | 144 | #6 | 14" | 23'-0 | 6'-1 | 3'-4 | 6½" | 4'-4 | 2'-10 | #6 | 14" | 27'-0 | 18'-3 | #6 | 14" | 36'-3 | 70 | #5 | 7" | 10'-6 | 5'-3 |
| 10' | 3' | 10" | 10" | #4 | 11" | 4'-3 | #5 | 5½" | 9'-0 | 108 | #6 | 11" | 27'-9 | 6'-11 | 4'-2 | 7½" | 5'-5 | 3'-6 | #5 | 11" | 33'-3 | 22'-6 | #6 | 11" | 44'-9 | 80 | #5 | 5½" | 9'-3 | 6'-6 |
| | 4' | 10½" | 10" | #4 | 11" | 5'-3 | #5 | 5½" | 11'-0 | 120 | #6 | 11" | 27'-9 | 6'-10 | 4'-2 | 8" | 5'-4 | 3'-5 | #5 | 11" | 33'-3 | 22'-6 | #6 | 11" | 44'-9 | 80 | #5 | 5½" | 9'-9 | 6'-6 |
| | 5' | 10½" | 10" | #4 | 11" | 6'-3 | #6 | 11" | 13'-0 | 120 | #6 | 11" | 28'-0 | 7'-1 | 4'-2 | 8" | 5'-4 | 3'-5 | #5 | 11" | 33'-3 | 22'-6 | #6 | 11" | 44'-9 | 80 | #5 | 5½" | 10'-3 | 6'-6 |
| | 6' | 10½" | 10" | #4 | 13" | 7'-3 | #5 | 6½" | 15'-0 | 132 | #6 | 13" | 28'-0 | 7'-2 | 4'-0 | 8" | 5'-6 | 3'-6 | #6 | 13" | 33'-3 | 22'-6 | #7 | 13" | 44'-9 | 80 | #5 | 6½" | 10'-9 | 6'-6 |
| | 7' | 10½" | 10" | #4 | 13" | 8'-3 | #5 | 6½" | 17'-0 | 144 | #6 | 13" | 28'-0 | 7'-2 | 4'-0 | 8" | 5'-6 | 3'-6 | #6 | 13" | 33'-3 | 22'-6 | #7 | 13" | 44'-9 | 80 | #5 | 6½" | 11'-3 | 6'-6 |
| | 8' | 10½" | 10" | #4 | 13" | 9'-3 | #6 | 13" | 19'-0 | 144 | #6 | 13" | 28'-0 | 7'-2 | 4'-0 | 8" | 5'-6 | 3'-6 | #6 | 13" | 33'-3 | 22'-6 | #7 | 13" | 44'-9 | 80 | #5 | 6½" | 11'-9 | 6'-6 |
| | 9' | 10½" | 10" | #4 | 13" | 10'-3 | #6 | 13" | 21'-0 | 156 | #6 | 13" | 28'-0 | 7'-2 | 4'-0 | 8" | 5'-6 | 3'-6 | #6 | 13" | 33'-3 | 22'-6 | #7 | 13" | 44'-9 | 80 | #5 | 6½" | 12'-3 | 6'-6 |
| | 10' | 10½" | 10" | #4 | 13" | 11'-3 | #4 | 6½" | 23'-0 | 168 | #6 | 13" | 28'-0 | 7'-2 | 4'-0 | 8" | 5'-6 | 3'-6 | #6 | 13" | 33'-3 | 22'-6 | #7 | 13" | 44'-9 | 80 | #5 | 6½" | 12'-9 | 6'-6 |
| 12' | 8' | 12½" | 12" | #4 | 11" | 9'-6 | #5 | 5½" | 20'-0 | 144 | #6 | 11" | 33'-3 | 8'-2 | 5'-0 | 10" | 6'-4 | 4'-0 | #6 | 11" | 40'-0 | 27'-0 | #7 | 11" | 53'-6 | 100 | #5 | 5½" | 13'-3 | 7'-8 |
| | 9' | 12½" | 12" | #4 | 11" | 10'-6 | #5 | 5½" | 22'-0 | 156 | #6 | 11" | 33'-6 | 8'-5 | 5'-0 | 10" | 6'-4 | 4'-0 | #6 | 11" | 40'-0 | 27'-0 | #7 | 11" | 53'-6 | 100 | #5 | 5½" | 13'-9 | 7'-8 |
| | 10' | 12½" | 12" | #4 | 12" | 11'-6 | #5 | 6" | 24'-0 | 168 | #7 | 12" | 33'-6 | 8'-7 | 5'-0 | 10" | 6'-4 | 3'-10 | #6 | 12" | 40'-0 | 27'-0 | #7 | 12" | 53'-6 | 100 | #5 | 6" | 14'-3 | 7'-8 |
| | 11' | 12½" | 12" | #4 | 12" | 12'-6 | #5 | 6" | 26'-0 | 168 | #7 | 12" | 33'-6 | 8'-7 | 5'-0 | 10" | 6'-4 | 3'-10 | #6 | 12" | 40'-0 | 27'-0 | #7 | 12" | 53'-6 | 100 | #5 | 6" | 14'-9 | 7'-8 |
| | 12' | 12½" | 12" | #4 | 12" | 13'-6 | #5 | 6" | 28'-0 | 180 | #7 | 12" | 33'-3 | 8'-4 | 5'-0 | 10" | 6'-4 | 3'-10 | #6 | 12" | 40'-0 | 27'-0 | #7 | 12" | 53'-6 | 100 | #5 | 6" | 15'-3 | 7'-8 |

✠ Total number of bars in the cross-section.

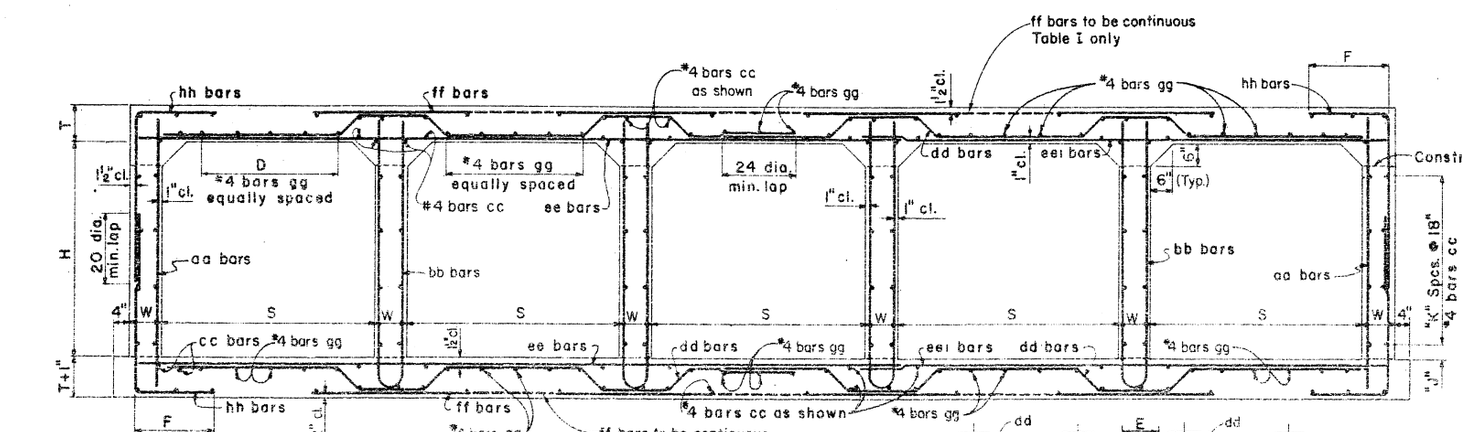


TYPICAL SECTION

REINFORCING BAR PLACING DIAGRAM
For Table I only

REINFORCING BAR PLACING DIAGRAM
For Tables II through V

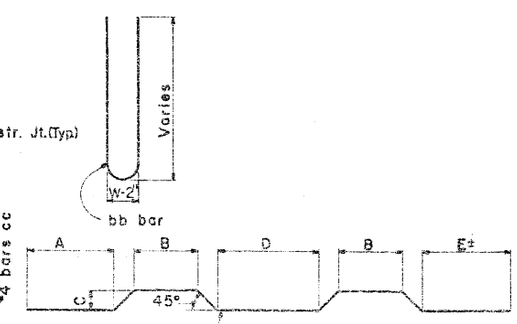


BENDS

| Height "H" | "J" Dim. | "K" Spaces |
|---|---|---|
| 3' | 9" | 1 |
| 4' | 3" | 2 |
| 5' | 12" | 2 |
| 6' | 9" | 3 |
| 7' | 3" | 4 |
| 8' | 12" | 4 |
| 9' | 9" | 5 |
| 10' | 3" | 6 |
| 11' | 12" | 6 |
| 12' | 9" | 7 |

NOTE:
See B-02.55 for Tables II thru V.
See B-01.10 for general notes and miscellaneous details.
All bend dimensions are out to out of bar.

| NO. | DESCRIPTION OF REVISIONS | MADE BY | DATE |
|---|---|---|---|
| 1 | Table I ff bars & quantities | JTW | 7-76 |
| 2 | — | | |
| 3 | — | | |

| | | |
|---|---|---|
| DESIGN | DHY | 12-71 |
| DRAWN | FDL | 8-72 |
| CHECKED | WAB | 3-73 |

DESIGN APPROVED R.C. Breckler
APPROVED FOR DISTRIBUTION R.C. Breckler

ARIZONA
DEPARTMENT OF TRANSPORTATION
HIGHWAYS DIVISION
STANDARD PLANS

FIVE BARREL
BOX CULVERT

REVISION

STANDARD NO. CB-5
PLAN NO. B-02.50

## TABLE NO. II
### 10'-15' FILL

| Span "S" | Height "H" | Top Slab "T" | Walls "W" | aa Size | aa Spacing | aa Length | bb Size | bb Spacing | bb Length | cc Number ⊕ | dd Size | dd Spacing | dd Length | dd A | dd B | dd C | dd D | dd E | ee & eel Size | ee & eel Spacing | ee Length | eel Length | ff Size | ff Spacing | ff Length | gg Number ⊕ | hh Size | hh Spacing | hh Length | hh F |
|---|---|---|---|---|---|---|---|---|---|---|---|---|---|---|---|---|---|---|---|---|---|---|---|---|---|---|---|---|---|---|
| 6' | 3' | 8" | 8" | #4 | 12" | 3'-9 | #4 | 12" | 8'-0 | 108 | #5 | 12" | 17'-6 | 4'-5 | 2'-6 | 5" | 3'-4 | 2'-4 | #4 | 12" | 20'-9 | 14'-3 | #5 | 12" | 4'-9 | 50 | #4 | 6" | 4'-3 | 1'-9 |
| | 4' | 8" | 8" | #4 | 12" | 4'-9 | #4 | 12" | 10'-0 | 120 | #5 | 12" | 17'-9 | 4'-8 | 2'-6 | 5" | 3'-4 | 2'-4 | #4 | 12" | 20'-9 | 14'-3 | #5 | 12" | 4'-9 | 50 | #4 | 6" | 4'-9 | 1'-9 |
| | 5' | 8" | 8" | #4 | 12" | 5'-9 | #4 | 12" | 12'-0 | 120 | #5 | 12" | 17'-9 | 4'-8 | 2'-6 | 5" | 3'-4 | 2'-4 | #4 | 12" | 20'-9 | 14'-3 | #5 | 12" | 4'-9 | 50 | #4 | 6" | 5'-3 | 1'-9 |
| | 6' | 8" | 8" | #4 | 11" | 6'-9 | #4 | 11" | 14'-0 | 132 | #5 | 11" | 17'-9 | 4'-8 | 2'-6 | 5" | 3'-4 | 2'-4 | #4 | 11" | 20'-9 | 14'-3 | #5 | 11" | 4'-9 | 50 | #4 | 5½" | 5'-9 | 1'-9 |
| | 7' | 8" | 8" | #4 | 11" | 7'-9 | #4 | 11" | 16'-0 | 144 | #5 | 11" | 17'-9 | 4'-8 | 2'-6 | 5" | 3'-4 | 2'-4 | #4 | 11" | 20'-9 | 14'-3 | #5 | 11" | 4'-9 | 50 | #4 | 5½" | 6'-3 | 1'-9 |
| 8' | 3' | 10" | 9" | #4 | 12" | 4'-3 | #4 | 12" | 9'-0 | 108 | #6 | 12" | 23'-0 | 5'-11 | 3'-0 | 7½" | 4'-6 | 3'-0 | #5 | 12" | 27'-0 | 18'-3 | #6 | 12" | 6'-3 | 60 | #5 | 6" | 5'-0 | 2'-3 |
| | 4' | 10" | 9" | #4 | 12" | 5'-3 | #4 | 12" | 11'-0 | 120 | #6 | 12" | 23'-3 | 6'-2 | 3'-0 | 7½" | 4'-6 | 3'-0 | #5 | 12" | 27'-0 | 18'-3 | #6 | 12" | 6'-3 | 60 | #4 | 6" | 5'-3 | 2'-0 |
| | 5' | 10" | 9" | #4 | 12" | 6'-3 | #4 | 12" | 13'-0 | 120 | #6 | 12" | 23'-3 | 6'-2 | 3'-0 | 7½" | 4'-6 | 3'-0 | #5 | 12" | 27'-0 | 18'-3 | #6 | 12" | 6'-3 | 60 | #4 | 6" | 5'-9 | 2'-0 |
| | 6' | 10" | 9" | #4 | 12" | 7'-3 | #4 | 12" | 15'-0 | 132 | #6 | 12" | 23'-3 | 6'-2 | 3'-0 | 7½" | 4'-6 | 3'-0 | #5 | 12" | 27'-0 | 18'-3 | #6 | 12" | 6'-3 | 60 | #4 | 6" | 6'-3 | 2'-0 |
| | 7' | 10" | 9" | #4 | 12" | 8'-3 | #4 | 12" | 17'-0 | 144 | #6 | 12" | 23'-3 | 6'-2 | 3'-0 | 7½" | 4'-6 | 3'-0 | #5 | 12" | 27'-0 | 18'-3 | #6 | 12" | 6'-3 | 60 | #4 | 6" | 6'-9 | 2'-0 |
| | 8' | 10" | 9" | #4 | 12" | 9'-3 | #4 | 12" | 19'-0 | 144 | #6 | 12" | 23'-3 | 6'-2 | 3'-0 | 7½" | 4'-6 | 3'-0 | #5 | 12" | 27'-0 | 18'-3 | #6 | 12" | 6'-3 | 60 | #5 | 6" | 7'-6 | 2'-3 |
| 10' | 3' | 12" | 10" | #4 | 11" | 4'-6 | #4 | 11" | 9'-6 | 108 | #6 | 11" | 28'-3 | 7'-3 | 3'-6 | 9½" | 5'-9 | 3'-9 | #5 | 11" | 33'-3 | 22'-6 | #7 | 11" | 7'-6 | 70 | #5 | 5½" | 5'-3 | 2'-3 |
| | 4' | 12" | 10" | #4 | 11" | 5'-6 | #4 | 11" | 11'-6 | 120 | #6 | 11" | 28'-3 | 7'-3 | 3'-6 | 9½" | 5'-9 | 3'-9 | #5 | 11" | 33'-3 | 22'-6 | #7 | 11" | 7'-6 | 70 | #5 | 5½" | 5'-9 | 2'-3 |
| | 5' | 12½" | 10" | #4 | 11" | 6'-6 | #4 | 11" | 13'-6 | 120 | #6 | 11" | 28'-6 | 7'-5 | 3'-6 | 10" | 5'-8 | 3'-8 | #5 | 11" | 33'-3 | 22'-6 | #7 | 11" | 7'-6 | 70 | #5 | 5½" | 6'-3 | 2'-3 |
| | 6' | 12½" | 10" | #4 | 11" | 7'-6 | #4 | 11" | 15'-6 | 132 | #6 | 11" | 28'-6 | 7'-5 | 3'-6 | 10" | 5'-8 | 3'-8 | #5 | 11" | 33'-3 | 22'-6 | #7 | 11" | 7'-6 | 70 | #4 | 5½" | 6'-9 | 2'-3 |
| | 7' | 12½" | 10" | #4 | 11" | 8'-6 | #4 | 11" | 17'-6 | 144 | #6 | 11" | 28'-6 | 7'-5 | 3'-6 | 10" | 5'-8 | 3'-8 | #5 | 11" | 33'-3 | 22'-6 | #7 | 11" | 7'-6 | 70 | #4 | 5½" | 7'-3 | 2'-3 |
| | 8' | 12½" | 10" | #4 | 13" | 9'-6 | #4 | 13" | 19'-6 | 144 | #7 | 13" | 28'-9 | 7'-8 | 3'-6 | 10" | 5'-8 | 3'-8 | #6 | 13" | 33'-3 | 22'-6 | #7 | 13" | 7'-6 | 70 | #5 | 6½" | 7'-9 | 2'-3 |
| | 9' | 12½" | 10" | #4 | 13" | 10'-6 | #4 | 13" | 21'-6 | 156 | #7 | 13" | 28'-9 | 7'-8 | 3'-6 | 10" | 5'-8 | 3'-8 | #6 | 13" | 33'-3 | 22'-6 | #7 | 13" | 7'-6 | 70 | #5 | 6½" | 8'-3 | 2'-3 |
| | 10' | 12½" | 10" | #4 | 13" | 11'-6 | #4 | 13" | 23'-6 | 168 | #7 | 13" | 28'-9 | 7'-8 | 3'-6 | 10" | 5'-8 | 3'-8 | #6 | 13" | 33'-3 | 22'-6 | #7 | 13" | 7'-6 | 70 | #5 | 6½" | 9'-0 | 2'-6 |
| 12' | 8' | 15" | 12" | #4 | 11" | 10'-0 | #4 | 11" | 20'-6 | 144 | #6 | 11" | 34'-9 | 8'-6 | 4'-6 | 12½" | 6'-5 | 4'-11 | #6 | 11" | 40'-0 | 27'-0 | #8 | 11" | 9'-0 | 80 | #5 | 5½" | 8'-3 | 2'-6 |
| | 9' | 15" | 12" | #4 | 11" | 11'-0 | #4 | 11" | 22'-6 | 156 | #6 | 11" | 35'-9 | 8'-9 | 4'-6 | 12½" | 6'-5 | 4'-11 | #6 | 11" | 40'-0 | 27'-0 | #8 | 11" | 9'-0 | 80 | #5 | 5½" | 8'-9 | 2'-6 |
| | 10' | 15" | 12" | #4 | 11" | 12'-0 | #4 | 11" | 24'-6 | 168 | #6 | 11" | 34'-9 | 8'-6 | 4'-6 | 12½" | 6'-5 | 4'-11 | #6 | 11" | 40'-0 | 27'-0 | #8 | 11" | 9'-0 | 80 | #5 | 5½" | 9'-6 | 2'-9 |
| | 11' | 15" | 12" | #4 | 11" | 13'-0 | #4 | 11" | 26'-6 | 168 | #6 | 11" | 34'-9 | 8'-6 | 4'-6 | 12½" | 6'-5 | 4'-11 | #6 | 11" | 40'-0 | 27'-0 | #8 | 11" | 9'-0 | 80 | #5 | 5½" | 10'-0 | 2'-9 |
| | 12' | 15" | 12" | #4 | 11" | 14'-0 | #4 | 11" | 28'-6 | 180 | #6 | 11" | 34'-9 | 8'-6 | 4'-6 | 12½" | 6'-5 | 4'-11 | #6 | 11" | 40'-0 | 27'-0 | #8 | 11" | 9'-0 | 80 | #5 | 5½" | 10'-9 | 3'-0 |

## TABLE NO. III
### 15'-20' FILL

| Span "S" | Height "H" | Top Slab "T" | Walls "W" | aa Size | aa Spacing | aa Length | bb Size | bb Spacing | bb Length | cc Number ⊕ | dd Size | dd Spacing | dd Length | dd A | dd B | dd C | dd D | dd E | ee & eel Size | ee & eel Spacing | ee Length | eel Length | ff Size | ff Spacing | ff Length | gg Number ⊕ | hh Size | hh Spacing | hh Length | hh F |
|---|---|---|---|---|---|---|---|---|---|---|---|---|---|---|---|---|---|---|---|---|---|---|---|---|---|---|---|---|---|---|
| 6' | 3' | 9" | 8" | #4 | 11" | 4'-0 | #4 | 11" | 8'-6 | 108 | #5 | 11" | 18'-0 | 4'-6 | 2'-6 | 6½" | 3'-1 | 2'-4 | #4 | 11" | 20'-9 | 14'-3 | #5 | 11" | 4'-9 | 40 | #4 | 5½" | 4'-3 | 1'-8 |
| | 4' | 9" | 8" | #4 | 11" | 5'-0 | #4 | 11" | 10'-6 | 120 | #5 | 11" | 18'-0 | 4'-6 | 2'-6 | 6½" | 3'-1 | 2'-4 | #4 | 11" | 20'-9 | 14'-3 | #5 | 11" | 4'-9 | 40 | #4 | 5½" | 4'-9 | 1'-8 |
| | 5' | 9" | 8" | #4 | 11" | 6'-0 | #4 | 11" | 12'-6 | 120 | #5 | 11" | 18'-0 | 4'-6 | 2'-6 | 6½" | 3'-1 | 2'-4 | #4 | 11" | 20'-9 | 14'-3 | #5 | 11" | 4'-9 | 40 | #4 | 5½" | 5'-3 | 1'-8 |
| | 6' | 9" | 8" | #4 | 11" | 7'-0 | #4 | 11" | 14'-6 | 132 | #5 | 11" | 18'-0 | 4'-6 | 2'-6 | 6½" | 3'-1 | 2'-4 | #4 | 11" | 20'-9 | 14'-3 | #5 | 11" | 4'-9 | 40 | #4 | 5½" | 5'-9 | 1'-8 |
| | 7' | 9" | 8" | #4 | 11" | 8'-0 | #4 | 11" | 16'-6 | 144 | #5 | 11" | 18'-0 | 4'-6 | 2'-6 | 6½" | 3'-1 | 2'-4 | #4 | 11" | 20'-9 | 14'-3 | #5 | 11" | 4'-9 | 40 | #4 | 5½" | 6'-3 | 1'-8 |
| 8' | 3' | 11½" | 9" | #4 | 12" | 4'-6 | #4 | 12" | 9'-6 | 108 | #6 | 12" | 23'-3 | 6'-0 | 3'-0 | 9" | 4'-3 | 2'-9 | #5 | 12" | 27'-0 | 18'-3 | #6 | 12" | 6'-3 | 60 | #4 | 6" | 4'-6 | 1'-9 |
| | 4' | 11½" | 9" | #4 | 12" | 5'-6 | #4 | 12" | 11'-6 | 120 | #6 | 12" | 23'-3 | 6'-0 | 3'-0 | 9" | 4'-3 | 2'-9 | #5 | 12" | 27'-0 | 18'-3 | #6 | 12" | 6'-3 | 60 | #4 | 6" | 5'-0 | 1'-9 |
| | 5' | 11½" | 9" | #4 | 13" | 6'-6 | #4 | 13" | 13'-6 | 120 | #6 | 13" | 23'-3 | 6'-0 | 3'-0 | 9" | 4'-3 | 2'-9 | #5 | 13" | 27'-0 | 18'-3 | #7 | 13" | 6'-6 | 60 | #5 | 6½" | 6'-0 | 2'-0 |
| | 6' | 11½" | 9" | #4 | 13" | 7'-6 | #4 | 13" | 15'-6 | 132 | #6 | 13" | 23'-3 | 6'-0 | 3'-0 | 9" | 4'-3 | 2'-9 | #5 | 13" | 27'-0 | 18'-3 | #7 | 13" | 6'-6 | 60 | #5 | 6½" | 6'-6 | 2'-0 |
| | 7' | 11½" | 9" | #4 | 13" | 8'-6 | #4 | 13" | 17'-6 | 144 | #6 | 13" | 23'-3 | 6'-0 | 3'-0 | 9" | 4'-3 | 2'-9 | #5 | 13" | 27'-0 | 18'-3 | #7 | 13" | 6'-6 | 60 | #5 | 6½" | 7'-0 | 2'-0 |
| | 8' | 11½" | 9" | #4 | 13" | 9'-6 | #4 | 13" | 19'-6 | 144 | #6 | 13" | 23'-3 | 6'-3 | 2'-6 | 9" | 4'-9 | 3'-0 | #5 | 13" | 27'-0 | 18'-3 | #7 | 13" | 6'-6 | 60 | #5 | 6½" | 7'-9 | 2'-4 |
| 10' | 3' | 14½" | 10" | #4 | 13" | 5'-0 | #4 | 13" | 10'-6 | 108 | #6 | 13" | 28'-6 | 7'-6 | 3'-0 | 1'-0 | 5'-10 | 3'-6 | #6 | 13" | 33'-3 | 22'-6 | #8 | 13" | 7'-9 | 70 | #5 | 6½" | 5'-3 | 2'-0 |
| | 4' | 14½" | 10" | #4 | 13" | 6'-0 | #4 | 13" | 12'-6 | 120 | #6 | 13" | 28'-6 | 7'-6 | 3'-0 | 1'-0 | 5'-10 | 3'-6 | #6 | 13" | 33'-3 | 22'-6 | #8 | 13" | 7'-9 | 70 | #5 | 6½" | 5'-9 | 2'-0 |
| | 5' | 15" | 10" | #4 | 13" | 7'-0 | #4 | 13" | 14'-6 | 120 | #6 | 13" | 29'-0 | 7'-9 | 3'-0 | 1'-0½ | 5'-9 | 3'-6 | #6 | 13" | 33'-3 | 22'-6 | #8 | 13" | 7'-9 | 70 | #5 | 6½" | 6'-3 | 2'-0 |
| | 6' | 15" | 10" | #4 | 13" | 8'-0 | #4 | 13" | 16'-6 | 132 | #6 | 13" | 29'-0 | 7'-9 | 3'-0 | 1'-0½ | 5'-9 | 3'-6 | #6 | 13" | 33'-3 | 22'-6 | #8 | 13" | 7'-9 | 70 | #5 | 6½" | 6'-9 | 2'-0 |
| | 7' | 15" | 10" | #4 | 13" | 9'-0 | #4 | 13" | 18'-6 | 144 | #6 | 13" | 29'-0 | 7'-9 | 3'-0 | 1'-0½ | 5'-9 | 3'-6 | #6 | 13" | 33'-3 | 22'-6 | #8 | 13" | 7'-9 | 70 | #5 | 6½" | 7'-3 | 2'-0 |
| | 8' | 15" | 10" | #4 | 13" | 10'-0 | #4 | 13" | 20'-6 | 144 | #6 | 13" | 29'-0 | 7'-9 | 3'-0 | 1'-0½ | 5'-9 | 3'-6 | #6 | 13" | 33'-3 | 22'-6 | #8 | 13" | 7'-9 | 70 | #5 | 6½" | 7'-9 | 2'-0 |
| | 9' | 15" | 10" | #4 | 13" | 11'-0 | #4 | 13" | 22'-6 | 156 | #6 | 13" | 28'-9 | 7'-6 | 3'-0 | 1'-0½ | 5'-9 | 3'-6 | #6 | 13" | 33'-3 | 22'-6 | #8 | 13" | 7'-9 | 70 | #5 | 6½" | 8'-6 | 2'-4 |
| | 10' | 15" | 10" | #4 | 12" | 12'-0 | #4 | 12" | 24'-6 | 168 | #6 | 12" | 28'-9 | 7'-6 | 3'-0 | 1'-0½ | 5'-9 | 3'-6 | #6 | 12" | 33'-3 | 22'-6 | #8 | 12" | 7'-9 | 70 | #5 | 6" | 9'-0 | 2'-4 |
| 12' | 8' | 18" | 12" | #4 | 12" | 10'-6 | #4 | 12" | 21'-6 | 144 | #7 | 12" | 34'-9 | 8'-11 | 4'-0 | 1'-3½ | 6'-5 | 4'-0 | #6 | 12" | 40'-0 | 27'-0 | #8 | 12" | 9'-0 | 80 | #5 | 6" | 8'-3 | 2'-4 |
| | 9' | 18" | 12" | #4 | 12" | 11'-6 | #4 | 12" | 23'-6 | 156 | #7 | 12" | 34'-9 | 8'-11 | 4'-0 | 1'-3½ | 6'-5 | 4'-0 | #6 | 12" | 40'-0 | 27'-0 | #8 | 12" | 9'-0 | 80 | #5 | 6" | 9'-0 | 2'-6 |
| | 10' | 18" | 12" | #4 | 12" | 12'-6 | #4 | 12" | 25'-6 | 168 | #7 | 12" | 34'-9 | 8'-11 | 4'-0 | 1'-3½ | 6'-5 | 4'-0 | #6 | 12" | 40'-0 | 27'-0 | #8 | 12" | 9'-0 | 80 | #5 | 6" | 9'-6 | 2'-6 |
| | 11' | 18" | 12" | #4 | 12" | 13'-6 | #4 | 12" | 27'-6 | 168 | #7 | 12" | 34'-9 | 8'-11 | 4'-0 | 1'-3½ | 6'-5 | 4'-0 | #6 | 12" | 40'-0 | 27'-0 | #8 | 12" | 9'-0 | 80 | #5 | 6" | 10'-0 | 2'-6 |
| | 12' | 18" | 12" | #4 | 12" | 14'-6 | #4 | 12" | 29'-6 | 180 | #7 | 12" | 34'-9 | 8'-11 | 4'-0 | 1'-3½ | 6'-5 | 4'-0 | #6 | 12" | 40'-0 | 27'-0 | #8 | 12" | 9'-0 | 80 | #6 | 6" | 11'-0 | 3'-0 |

## TABLE NO. IV
### 20'-25' FILL

| Span "S" | Height "H" | Top Slab "T" | Walls "W" | aa Size | aa Spacing | aa Length | bb Size | bb Spacing | bb Length | cc Number ⊕ | dd Size | dd Spacing | dd Length | dd A | dd B | dd C | dd D | dd E | ee & eer Size | ee & eer Spacing | ee Length | eel Length | ff Size | ff Spacing | ff Length | gg Number ⊕ | hh Size | hh Spacing | hh Length | hh F |
|---|---|---|---|---|---|---|---|---|---|---|---|---|---|---|---|---|---|---|---|---|---|---|---|---|---|---|---|---|---|---|
| 6' | 3' | 10½" | 8" | #4 | 11" | 4'-3 | #4 | 11" | 9'-0 | 108 | #5 | 11" | 18'-6 | 4'-8 | 2'-6 | 8" | 2'-10 | 2'-2 | #4 | 11" | 20'-9 | 14'-3 | #5 | 11" | 5'-3 | 40 | #4 | 5½" | 4'-3 | 1'-6 |
| | 4' | 10½" | 8" | #4 | 11" | 5'-3 | #4 | 11" | 11'-0 | 120 | #5 | 11" | 18'-6 | 4'-8 | 2'-6 | 8" | 2'-10 | 2'-2 | #4 | 11" | 20'-9 | 14'-3 | #5 | 11" | 5'-3 | 40 | #4 | 5½" | 4'-9 | 1'-6 |
| | 5' | 10½" | 8" | #4 | 11" | 6'-3 | #4 | 11" | 13'-0 | 120 | #5 | 11" | 18'-6 | 4'-8 | 2'-6 | 8" | 2'-10 | 2'-2 | #4 | 11" | 20'-9 | 14'-3 | #5 | 11" | 5'-3 | 40 | #4 | 5½" | 5'-3 | 1'-6 |
| | 6' | 10½" | 8" | #4 | 11" | 7'-3 | #4 | 11" | 15'-0 | 132 | #5 | 11" | 18'-6 | 4'-8 | 2'-6 | 8" | 2'-10 | 2'-2 | #4 | 11" | 20'-9 | 14'-3 | #5 | 11" | 4'-9 | 40 | #4 | 5½" | 6'-0 | 1'-9 |
| | 7' | 10½" | 8" | #4 | 11" | 8'-3 | #4 | 11" | 17'-0 | 144 | #5 | 11" | 18'-6 | 4'-8 | 2'-6 | 8" | 2'-10 | 2'-2 | #4 | 11" | 20'-9 | 14'-3 | #5 | 11" | 4'-9 | 40 | #4 | 5½" | 6'-6 | 1'-9 |
| 8' | 3' | 13½" | 9" | #4 | 11" | 4'-9 | #4 | 11" | 10'-0 | 108 | #5 | 11" | 23'-9 | 6'-0 | 3'-0 | 11" | 3'-11 | 2'-7 | #5 | 11" | 27'-0 | 18'-3 | #7 | 11" | 6'-6 | 50 | #4 | 5½" | 4'-6 | 1'-6 |
| | 4' | 13½" | 9" | #4 | 11" | 5'-9 | #4 | 11" | 12'-0 | 120 | #5 | 11" | 23'-9 | 6'-0 | 3'-0 | 11" | 3'-11 | 2'-7 | #5 | 11" | 27'-0 | 18'-3 | #7 | 11" | 6'-6 | 50 | #4 | 5½" | 5'-0 | 1'-6 |
| | 5' | 13½" | 9" | #4 | 11" | 6'-9 | #4 | 11" | 14'-0 | 120 | #5 | 11" | 23'-9 | 6'-0 | 3'-0 | 11" | 3'-11 | 2'-7 | #5 | 11" | 27'-0 | 18'-3 | #7 | 11" | 6'-6 | 50 | #4 | 5½" | 5'-6 | 1'-6 |
| | 6' | 13½" | 9" | #4 | 11" | 7'-9 | #4 | 11" | 16'-0 | 132 | #5 | 11" | 23'-9 | 6'-0 | 3'-0 | 11" | 3'-11 | 2'-7 | #5 | 11" | 27'-0 | 18'-3 | #7 | 11" | 6'-6 | 50 | #4 | 5½" | 6'-3 | 1'-9 |
| | 7' | 13½" | 9" | #4 | 11" | 8'-9 | #4 | 11" | 18'-0 | 144 | #5 | 11" | 23'-9 | 6'-0 | 3'-0 | 11" | 3'-11 | 2'-7 | #5 | 11" | 27'-0 | 18'-3 | #7 | 11" | 6'-6 | 50 | #4 | 5½" | 6'-9 | 1'-9 |
| | 8' | 13½" | 9" | #4 | 12" | 9'-9 | #4 | 12" | 20'-0 | 144 | #5 | 12" | 23'-9 | 6'-0 | 3'-0 | 11" | 3'-11 | 2'-7 | #5 | 12" | 27'-0 | 18'-3 | #7 | 12" | 6'-6 | 50 | #5 | 6" | 7'-3 | 1'-9 |
| 10' | 3' | 16½" | 10" | #4 | 12" | 5'-3 | #4 | 12" | 11'-0 | 108 | #6 | 12" | 29'-3 | 7'-8 | 3'-0 | 1'-2 | 5'-6 | 3'-5 | #6 | 12" | 33'-3 | 22'-6 | #8 | 12" | 7'-9 | 70 | #5 | 6" | 5'-0 | 1'-9 |
| | 4' | 17" | 10" | #4 | 12" | 6'-3 | #4 | 12" | 13'-0 | 120 | #6 | 12" | 29'-6 | 7'-8 | 3'-0 | 1'-2½ | 5'-5 | 3'-6 | #6 | 12" | 33'-3 | 22'-6 | #8 | 12" | 7'-9 | 70 | #4 | 6" | 5'-6 | 1'-9 |
| | 5' | 17" | 10" | #4 | 12" | 7'-3 | #4 | 12" | 15'-0 | 120 | #6 | 12" | 29'-6 | 7'-8 | 3'-0 | 1'-2½ | 5'-5 | 3'-6 | #6 | 12" | 33'-3 | 22'-6 | #8 | 12" | 7'-9 | 70 | #4 | 6" | 6'-0 | 1'-9 |
| | 6' | 17" | 10" | #4 | 12" | 8'-3 | #4 | 12" | 17'-0 | 132 | #6 | 12" | 29'-6 | 7'-8 | 3'-0 | 1'-2½ | 5'-5 | 3'-6 | #6 | 12" | 33'-3 | 22'-6 | #8 | 12" | 7'-9 | 70 | #4 | 6" | 6'-6 | 1'-9 |
| | 7' | 17" | 10" | #4 | 12" | 9'-3 | #4 | 12" | 19'-0 | 144 | #6 | 12" | 29'-6 | 7'-8 | 3'-0 | 1'-2½ | 5'-5 | 3'-6 | #6 | 12" | 33'-3 | 22'-6 | #8 | 12" | 7'-9 | 70 | #4 | 6" | 7'-3 | 2'-0 |
| | 8' | 17" | 10" | #4 | 12" | 10'-3 | #4 | 12" | 21'-0 | 144 | #6 | 12" | 29'-6 | 7'-8 | 3'-0 | 1'-2½ | 5'-5 | 3'-6 | #6 | 12" | 33'-3 | 22'-6 | #8 | 12" | 7'-9 | 70 | #5 | 6" | 8'-0 | 2'-0 |
| | 9' | 17" | 10" | #4 | 12" | 11'-3 | #4 | 12" | 23'-0 | 156 | #6 | 12" | 29'-6 | 7'-8 | 3'-0 | 1'-2½ | 5'-5 | 3'-6 | #6 | 12" | 33'-3 | 22'-6 | #8 | 12" | 7'-9 | 70 | #5 | 6" | 8'-6 | 2'-0 |
| | 10' | 17" | 10" | #5 | 12" | 12'-3 | #4 | 12" | 25'-0 | 168 | #6 | 12" | 29'-6 | 7'-8 | 3'-0 | 1'-2½ | 5'-5 | 3'-6 | #6 | 12" | 33'-3 | 22'-6 | #8 | 12" | 7'-9 | 70 | #5 | 6" | 9'-0 | 2'-3 |
| 12' | 8' | 20½" | 12" | #4 | 15" | 11'-0 | #4 | 15" | 22'-6 | 144 | #6 | 10" | 35'-0 | 8'-9 | 4'-0 | 1'-6 | 6'-0 | 3'-9 | #6 | 10" | 40'-0 | 27'-0 | #8 | 10" | 9'-0 | 70 | #4 | 5" | 8'-3 | 2'-2 |
| | 9' | 20½" | 12" | #4 | 15" | 12'-0 | #4 | 15" | 24'-6 | 156 | #6 | 10" | 35'-0 | 8'-9 | 4'-0 | 1'-6 | 6'-0 | 3'-9 | #6 | 10" | 40'-0 | 27'-0 | #8 | 10" | 9'-0 | 70 | #5 | 5" | 9'-0 | 2'-4 |
| | 10' | 20½" | 12" | #4 | 10" | 13'-0 | #4 | 10" | 26'-6 | 168 | #6 | 10" | 35'-0 | 8'-9 | 4'-0 | 1'-6 | 6'-0 | 3'-9 | #6 | 10" | 40'-0 | 27'-0 | #8 | 10" | 9'-0 | 70 | #5 | 5" | 9'-9 | 2'-6 |
| | 11' | 20½" | 12" | #4 | 10" | 14'-0 | #4 | 10" | 28'-6 | 168 | #6 | 10" | 34'-9 | 8'-6 | 4'-0 | 1'-6 | 6'-0 | 3'-9 | #6 | 10" | 40'-0 | 27'-0 | #8 | 10" | 9'-0 | 70 | #5 | 5" | 10'-3 | 2'-6 |
| | 12' | 20½" | 12" | #4 | 10" | 15'-0 | #4 | 10" | 30'-6 | 180 | #6 | 10" | 34'-9 | 8'-6 | 4'-0 | 1'-6 | 6'-0 | 3'-9 | #6 | 10" | 40'-0 | 27'-0 | #8 | 10" | 9'-0 | 70 | #5 | 5" | 11'-0 | 2'-9 |

## TABLE NO. V
### 25'-30' FILL

| Span "S" | Height "H" | Top Slab "T" | Walls "W" | aa Size | aa Spacing | aa Length | bb Size | bb Spacing | bb Length | cc Number ⊕ | dd Size | dd Spacing | dd Length | dd A | dd B | dd C | dd D | dd E | ee & eel Size | ee & eel Spacing | ee Length | eel Length | ff Size | ff Spacing | ff Length | gg Number ⊕ | hh Size | hh Spacing | hh Length | hh F |
|---|---|---|---|---|---|---|---|---|---|---|---|---|---|---|---|---|---|---|---|---|---|---|---|---|---|---|---|---|---|---|
| 6' | 3' | 11½" | 8" | #4 | 15" | 4'-6 | #4 | 15" | 9'-6 | 108 | #5 | 10" | 18'-6 | 4'-11 | 2'-0 | 9" | 3'-2 | 2'-2 | #4 | 10" | 20'-9 | 14'-3 | #5 | 10" | 5'-3 | 40 | #4 | 5" | 4'-3 | 1'-6 |
| | 4' | 11½" | 8" | #4 | 15" | 5'-6 | #4 | 15" | 11'-6 | 120 | #5 | 10" | 18'-6 | 4'-11 | 2'-0 | 9" | 3'-2 | 2'-2 | #4 | 10" | 20'-9 | 14'-3 | #5 | 10" | 5'-3 | 40 | #4 | 5" | 4'-9 | 1'-6 |
| | 5' | 11½" | 8" | #4 | 15" | 6'-6 | #4 | 15" | 13'-6 | 120 | #5 | 10" | 18'-6 | 4'-11 | 2'-0 | 9" | 3'-2 | 2'-2 | #4 | 10" | 20'-9 | 14'-3 | #5 | 10" | 5'-3 | 40 | #4 | 5" | 5'-3 | 1'-6 |
| | 6' | 11½" | 8" | #4 | 15" | 7'-6 | #4 | 15" | 15'-6 | 132 | #5 | 10" | 18'-6 | 4'-11 | 2'-0 | 9" | 3'-2 | 2'-2 | #4 | 10" | 20'-9 | 14'-3 | #5 | 10" | 4'-9 | 40 | #4 | 5" | 6'-0 | 1'-9 |
| | 7' | 11½" | 8" | #4 | 10" | 8'-6 | #4 | 15" | 17'-6 | 144 | #5 | 10" | 18'-6 | 4'-11 | 2'-0 | 9" | 3'-2 | 2'-2 | #4 | 10" | 20'-9 | 14'-3 | #5 | 10" | 4'-9 | 40 | #4 | 5" | 6'-6 | 1'-9 |
| 8' | 3' | 15½" | 9" | #4 | 11" | 5'-0 | #4 | 11" | 10'-9 | 108 | #5 | 11" | 24'-0 | 5'-10 | 3'-0 | 1'-1 | 3'-7 | 2'-5 | #5 | 11" | 27'-0 | 18'-3 | #7 | 11" | 7'-0 | 50 | #4 | 5½" | 4'-9 | 1'-8 |
| | 4' | 15½" | 9" | #4 | 11" | 6'-0 | #4 | 11" | 12'-9 | 120 | #5 | 11" | 24'-0 | 5'-10 | 3'-0 | 1'-1 | 3'-7 | 2'-5 | #5 | 11" | 27'-0 | 18'-3 | #7 | 11" | 7'-0 | 50 | #4 | 5½" | 5'-3 | 1'-8 |
| | 5' | 15½" | 9" | #4 | 11" | 7'-0 | #4 | 11" | 14'-9 | 120 | #5 | 11" | 24'-0 | 5'-10 | 3'-0 | 1'-1 | 3'-7 | 2'-5 | #5 | 11" | 27'-0 | 18'-3 | #7 | 11" | 6'-6 | 50 | #4 | 5½" | 5'-9 | 1'-8 |
| | 6' | 15½" | 9" | #4 | 11" | 8'-0 | #4 | 11" | 16'-9 | 132 | #5 | 11" | 24'-0 | 5'-10 | 3'-0 | 1'-1 | 3'-7 | 2'-5 | #5 | 11" | 27'-0 | 18'-3 | #7 | 11" | 6'-6 | 50 | #4 | 5½" | 6'-0 | 1'-8 |
| | 7' | 15½" | 9" | #4 | 11" | 9'-0 | #4 | 11" | 18'-9 | 144 | #5 | 11" | 24'-0 | 5'-10 | 3'-0 | 1'-1 | 3'-7 | 2'-5 | #5 | 11" | 27'-0 | 18'-3 | #7 | 11" | 6'-6 | 50 | #4 | 5½" | 7'-0 | 1'-10 |
| | 8' | 15½" | 9" | #4 | 11" | 10'-0 | #4 | 11" | 20'-9 | 144 | #5 | 11" | 24'-0 | 5'-10 | 3'-0 | 1'-1 | 3'-7 | 2'-5 | #5 | 11" | 27'-0 | 18'-3 | #7 | 11" | 6'-6 | 50 | #5 | 5½" | 7'-9 | 2'-0 |
| 10' | 3' | 19" | 10" | #4 | 11" | 5'-9 | #4 | 11" | 11'-9 | 108 | #6 | 11" | 29'-6 | 7'-5 | 3'-0 | 1'-4½ | 5'-1 | 3'-2 | #6 | 11" | 33'-3 | 22'-6 | #8 | 11" | 7'-9 | 60 | #4 | 5½" | 5'-0 | 1'-7 |
| | 4' | 19" | 10" | #4 | 11" | 6'-9 | #4 | 11" | 13'-9 | 120 | #6 | 11" | 29'-6 | 7'-5 | 3'-0 | 1'-4½ | 5'-1 | 3'-2 | #6 | 11" | 33'-3 | 22'-6 | #8 | 11" | 7'-9 | 60 | #4 | 5½" | 5'-6 | 1'-7 |
| | 5' | 19" | 10" | #4 | 11" | 7'-9 | #4 | 11" | 15'-9 | 120 | #6 | 11" | 29'-6 | 7'-5 | 3'-0 | 1'-4½ | 5'-1 | 3'-2 | #6 | 11" | 33'-3 | 22'-6 | #8 | 11" | 7'-9 | 60 | #4 | 5½" | 6'-0 | 1'-7 |
| | 6' | 19" | 10" | #4 | 11" | 8'-9 | #4 | 11" | 17'-9 | 132 | #6 | 11" | 29'-6 | 7'-5 | 3'-0 | 1'-4½ | 5'-1 | 3'-2 | #6 | 11" | 33'-3 | 22'-6 | #8 | 11" | 7'-9 | 60 | #4 | 5½" | 6'-6 | 1'-7 |
| | 7' | 19" | 10" | #4 | 11" | 9'-9 | #4 | 11" | 19'-9 | 144 | #6 | 11" | 29'-6 | 7'-5 | 3'-0 | 1'-4½ | 5'-1 | 3'-2 | #6 | 11" | 33'-3 | 22'-6 | #8 | 11" | 7'-9 | 60 | #4 | 5½" | 7'-0 | 2'-0 |
| | 8' | 19" | 10" | #4 | 13" | 10'-9 | #4 | 13" | 21'-9 | 144 | #7 | 13" | 30'-0 | 7'-8 | 3'-0 | 1'-4½ | 5'-1 | 3'-5 | #6 | 13" | 33'-3 | 22'-6 | #8 | 13" | 7'-9 | 60 | #5 | 6½" | 8'-0 | 2'-0 |
| | 9' | 19" | 10" | #5 | 13" | 11'-9 | #4 | 13" | 23'-9 | 156 | #7 | 13" | 30'-0 | 7'-8 | 3'-0 | 1'-4½ | 5'-1 | 3'-5 | #6 | 13" | 33'-3 | 22'-6 | #8 | 13" | 7'-9 | 60 | #5 | 6½" | 8'-6 | 2'-0 |
| | 10' | 19" | 10" | #5 | 11" | 12'-9 | #4 | 11" | 25'-9 | 168 | #6 | 11" | 29'-6 | 7'-5 | 3'-0 | 1'-4½ | 5'-1 | 3'-2 | #6 | 11" | 33'-3 | 22'-6 | #8 | 11" | 7'-9 | 60 | #5 | 5½" | 9'-3 | 2'-3 |
| 12' | 8' | 23" | 12" | #4 | 10" | 11'-3 | #4 | 15" | 23'-0 | 144 | #6 | 10" | 35'-6 | 8'-7 | 4'-0 | 1'-8½ | 5'-7 | 3'-6 | #6 | 10" | 40'-0 | 27'-0 | #8 | 10" | 9'-0 | 70 | #4 | 5" | 8'-3 | 2'-0 |
| | 9' | 23" | 12" | #4 | 10" | 12'-3 | #4 | 15" | 25'-0 | 156 | #6 | 10" | 35'-6 | 8'-7 | 4'-0 | 1'-8½ | 5'-7 | 3'-6 | #6 | 10" | 40'-0 | 27'-0 | #8 | 10" | 9'-0 | 70 | #5 | 5" | 9'-3 | 2'-4 |
| | 10' | 23" | 12" | #4 | 10" | 13'-3 | #4 | 15" | 27'-0 | 168 | #6 | 10" | 35'-6 | 8'-7 | 4'-0 | 1'-8½ | 5'-7 | 3'-6 | #6 | 10" | 40'-0 | 27'-0 | #8 | 10" | 9'-0 | 70 | #5 | 5" | 9'-9 | 2'-4 |
| | 11' | 23" | 12" | #5 | 10" | 14'-3 | #4 | 15" | 29'-0 | 168 | #6 | 10" | 35'-6 | 8'-7 | 4'-0 | 1'-8½ | 5'-7 | 3'-6 | #6 | 10" | 40'-0 | 27'-0 | #8 | 10" | 9'-0 | 70 | #5 | 5" | 10'-6 | 2'-8 |
| | 12' | 23" | 12" | #6 | 10" | 15'-3 | #4 | 15" | 31'-0 | 180 | #6 | 10" | 35'-3 | 8'-4 | 4'-0 | 1'-8½ | 5'-7 | 3'-6 | #6 | 10" | 40'-0 | 27'-0 | #8 | 10" | 9'-0 | 70 | #5 | 5" | 11'-0 | 2'-8 |

⊕ Total number of bars in the cross-section.

NOTE:

See B-02.50 for Table No. I, typical section, steel call-outs, bend diagrams and quantities.

See B-01.10 for general notes and miscellaneous details.

REGISTERED PROFESSIONAL ENGINEER CERTIFICATE (CIVIL) — RICHARD C. BRECHLER — EXP. DEC. 31, 19 — ARIZONA, U.S.A.

| DESIGN APPROVED: R. C. Brechler | ARIZONA DEPARTMENT OF TRANSPORTATION HIGHWAYS DIVISION STANDARD PLANS | REVISION |
|---|---|---|
| APPROVED FOR DISTRIBUTION: [signature] | FIVE BARREL BOX CULVERT | STANDARD NO. CB-5A; PLAN NO. B-02.55 |

| QUANTITIES PER LIN. FOOT OF BARRELS | | | | | | | | | | | |
|---|---|---|---|---|---|---|---|---|---|---|---|
| | | Table I | | Table II | | Table III | | Table IV | | Table V | |
| Span "S" | Height "H" | Concrete C.Y. | Reinf. Steel Lbs. | Concrete C.Y. | Reinf. Steel Lbs. | Concrete C.Y. | Reinf. Steel Lbs. | Concrete C.Y. | Reinf. Steel Lbs. | Concrete C.Y. | Reinf. Steel Lbs. |
| 6' | 3' | 2.726 | 491.6 | 2.726 | 370.0 | 2.979 | 388.7 | 3.359 | 398.8 | 3.612 | 415.5 |
| | 4' | 2.899 | 495.7 | 2.899 | 391.1 | 3.152 | 409.7 | 3.532 | 419.8 | 3.786 | 435.7 |
| | 5' | 3.072 | 507.4 | 3.072 | 401.8 | 3.325 | 421.4 | 3.705 | 431.5 | 3.958 | 444.1 |
| | 6' | 3.245 | 528.4 | 3.245 | 447.1 | 3.498 | 442.4 | 3.878 | 449.4 | 4.131 | 459.7 |
| | 7' | 3.418 | 549.4 | 3.418 | 468.1 | 3.671 | 463.4 | 4.050 | 470.4 | 4.303 | 483.2 |
| 8' | 3' | 3.617 | 670.5 | 4.113 | 579.0 | 4.609 | 566.4 | 5.271 | 609.9 | 5.932 | 622.0 |
| | 4' | 3.811 | 710.5 | 4.307 | 584.2 | 4.803 | 586.4 | 5.465 | 629.0 | 6.127 | 641.1 |
| | 5' | 4.171 | 692.9 | 4.502 | 594.9 | 4.998 | 635.1 | 5.659 | 638.8 | 6.321 | 642.7 |
| | 6' | 4.365 | 718.4 | 4.696 | 615.0 | 5.192 | 654.9 | 5.854 | 659.6 | 6.515 | 666.6 |
| | 7' | 4.560 | 744.0 | 4.891 | 635.0 | 5.387 | 674.7 | 6.048 | 683.9 | 6.710 | 688.0 |
| | 8' | 4.754 | 761.4 | 5.085 | 669.5 | 5.581 | 686.9 | 6.243 | 694.3 | 6.903 | 698.3 |
| 10' | 3' | 4.993 | 901.3 | 5.810 | 797.0 | 6.831 | 845.8 | 7.648 | 851.2 | 8.669 | 891.0 |
| | 4' | 5.414 | 939.4 | 6.026 | 817.6 | 7.047 | 864.7 | 8.068 | 853.6 | 8.885 | 910.1 |
| | 5' | 5.630 | 926.7 | 6.446 | 830.8 | 7.468 | 878.3 | 8.284 | 861.6 | 9.101 | 919.8 |
| | 6' | 5.846 | 958.5 | 6.663 | 851.4 | 7.684 | 897.1 | 8.501 | 878.9 | 9.317 | 938.9 |
| | 7' | 6.062 | 974.9 | 6.879 | 872.0 | 7.900 | 916.0 | 8.717 | 897.6 | 9.533 | 963.9 |
| | 8' | 6.278 | 1062.5 | 7.095 | 883.2 | 8.116 | 930.0 | 8.933 | 985.6 | 9.749 | 975.9 |
| | 9' | 6.494 | 1092.5 | 7.311 | 903.8 | 8.332 | 949.3 | 9.149 | 954.9 | 9.966 | 1023.0 |
| | 10' | 6.710 | 1122.4 | 7.527 | 926.3 | 8.548 | 968.7 | 9.363 | 981.3 | 10.182 | 1055.9 |
| 12' | 8' | 8.497 | 1372.9 | 9.721 | 1157.2 | 11.190 | 1203.3 | 12.415 | 1205.8 | 13.639 | 1327.5 |
| | 9' | 8.756 | 1410.7 | 9.980 | 1182.1 | 11.450 | 1256.3 | 12.674 | 1258.8 | 13.898 | 1346.8 |
| | 10' | 9.015 | 1446.4 | 10.240 | 1204.8 | 11.709 | 1283.7 | 12.933 | 1289.0 | 14.157 | 1376.1 |
| | 11' | 9.275 | 1472.8 | 10.499 | 1218.1 | 11.968 | 1295.7 | 13.192 | 1298.5 | 14.417 | 1430.4 |
| | 12' | 9.534 | 1506.4 | 10.758 | 1243.0 | 12.227 | 1319.5 | 13.452 | 1335.9 | 14.676 | 1463.6 |

| TABLE NO. I 0'-10' FILL | | | | | | | | | | | | | | | | | | | | | | | | | | | | | | | |
|---|---|---|---|---|---|---|---|---|---|---|---|---|---|---|---|---|---|---|---|---|---|---|---|---|---|---|---|---|---|---|---|
| | | | | aa | | | bb | | | cc | dd | | | | | | | ee | | | ff | | | gg | hh | | | | |
| Span "S" | Height "H" | Top Slab "T" | Walls "W" | Size | Spacing | Length | Size | Spacing | Length | Number ✠ | Size | Spacing | Length | A | B | C | D | E | Size | Spacing | Length | Size | Spacing | Length | Number ✠ | Size | Spacing | Length | F |
| 6' | 3' | 8" | 8" | #4 | 11" | 3'-9 | #5 | 11" | 8'-3 | 128 | #5 | 11" | 25'-0 | 5'-1 | 2'-3 | 5½" | 3'-6 | 5'-1 | #5 | 11" | 20'-9 | #5 | 11" | 14'-6 | 60 | #4 | 5½" | 6'-9 | 4'-2 |
| | 4' | 8" | 8" | #4 | 11" | 4'-9 | #4 | 11" | 10'-3 | 142 | #5 | 11" | 25'-0 | 5'-1 | 2'-3 | 5½" | 3'-6 | 5'-1 | #5 | 11" | 20'-9 | #5 | 11" | 14'-6 | 60 | #4 | 5½" | 7'-3 | 4'-2 |
| | 5' | 8" | 8" | #4 | 11" | 5'-9 | #4 | 11" | 12'-3 | 142 | #5 | 11" | 25'-0 | 5'-1 | 2'-3 | 5½" | 3'-6 | 5'-1 | #5 | 11" | 20'-9 | #5 | 11" | 14'-6 | 60 | #4 | 5½" | 7'-9 | 4'-2 |
| | 6' | 8" | 8" | #4 | 11" | 6'-9 | #4 | 11" | 14'-3 | 156 | #5 | 11" | 25'-0 | 5'-1 | 2'-3 | 5½" | 3'-6 | 5'-1 | #5 | 11" | 20'-9 | #5 | 11" | 14'-6 | 60 | #4 | 5½" | 8'-3 | 4'-2 |
| | 7' | 8" | 8" | #4 | 11" | 7'-9 | #4 | 11" | 16'-3 | 170 | #5 | 11" | 25'-0 | 5'-1 | 2'-3 | 5½" | 3'-6 | 5'-1 | #5 | 11" | 20'-9 | #5 | 11" | 14'-6 | 60 | #4 | 5½" | 8'-9 | 4'-2 |
| 8' | 3' | 8½" | 9" | #4 | 14" | 4'-0 | #5 | 7" | 8'-6 | 128 | #6 | 14" | 31'-9 | 5'-10 | 3'-4 | 6" | 4'-5 | 6'-8 | #6 | 14" | 27'-0 | #6 | 14" | 18'-9 | 72 | #5 | 7" | 8'-0 | 5'-3 |
| | 4' | 8½" | 9" | #4 | 14" | 5'-0 | #5 | 7" | 10'-6 | 142 | #6 | 14" | 31'-9 | 5'-10 | 3'-4 | 6" | 4'-5 | 6'-8 | #6 | 14" | 27'-0 | #6 | 14" | 18'-9 | 84 | #5 | 7" | 8'-6 | 5'-3 |
| | 5' | 9" | 9" | #4 | 14" | 6'-0 | #4 | 7" | 12'-6 | 142 | #6 | 14" | 31'-9 | 6'-0 | 3'-0 | 6½" | 4'-8 | 6'-6 | #6 | 14" | 27'-0 | #6 | 14" | 18'-9 | 84 | #5 | 7" | 9'-0 | 5'-3 |
| | 6' | 9" | 9" | #4 | 14" | 7'-0 | #4 | 7" | 14'-6 | 156 | #6 | 14" | 31'-9 | 6'-0 | 3'-0 | 6½" | 4'-8 | 6'-6 | #6 | 14" | 27'-0 | #6 | 14" | 18'-9 | 84 | #5 | 7" | 9'-6 | 5'-3 |
| | 7' | 9" | 9" | #4 | 14" | 8'-0 | #4 | 7" | 16'-6 | 170 | #6 | 14" | 31'-9 | 5'-10 | 3'-4 | 6½" | 4'-4 | 6'-8 | #6 | 14" | 27'-0 | #6 | 14" | 18'-9 | 84 | #5 | 7" | 10'-0 | 5'-3 |
| | 8' | 9" | 9" | #4 | 14" | 9'-0 | #4 | 7" | 18'-6 | 170 | #6 | 14" | 32'-0 | 6'-1 | 3'-4 | 6½" | 4'-4 | 6'-8 | #6 | 14" | 27'-0 | #6 | 14" | 18'-9 | 84 | #5 | 7" | 10'-6 | 5'-3 |
| 10' | 3' | 10" | 10" | #4 | 11" | 4'-3 | #5 | 5½" | 9'-0 | 128 | #6 | 11" | 39'-0 | 7'-0 | 4'-2 | 7½" | 5'-5 | 8'-4 | #5 | 11" | 33'-6 | #6 | 11" | 23'-0 | 96 | #5 | 5½" | 9'-3 | 6'-6 |
| | 4' | 10½" | 10" | #4 | 11" | 5'-3 | #5 | 5½" | 11'-0 | 142 | #6 | 11" | 39'-0 | 6'-11 | 4'-2 | 8" | 5'-4 | 8'-4 | #5 | 11" | 33'-6 | #6 | 11" | 23'-0 | 96 | #5 | 5½" | 9'-9 | 6'-6 |
| | 5' | 10½" | 10" | #4 | 11" | 6'-3 | #6 | 11" | 13'-0 | 142 | #6 | 11" | 39'-0 | 7'-1 | 4'-2 | 8" | 5'-4 | 8'-3 | #5 | 11" | 33'-6 | #6 | 11" | 23'-0 | 96 | #5 | 5½" | 10'-3 | 6'-6 |
| | 6' | 10½" | 10" | #4 | 11" | 7'-3 | #6 | 11" | 15'-0 | 156 | #6 | 11" | 39'-0 | 7'-2 | 4'-0 | 8" | 5'-6 | 8'-2 | #5 | 11" | 33'-6 | #6 | 11" | 23'-0 | 96 | #5 | 5½" | 10'-9 | 6'-6 |
| | 7' | 10½" | 10" | #4 | 11" | 8'-3 | #4 | 5½" | 17'-0 | 170 | #6 | 11" | 39'-0 | 7'-2 | 4'-0 | 8" | 5'-6 | 8'-2 | #5 | 11" | 33'-6 | #6 | 11" | 23'-0 | 96 | #5 | 5½" | 11'-3 | 6'-6 |
| | 8' | 10½" | 10" | #4 | 11" | 9'-3 | #4 | 5½" | 19'-0 | 170 | #6 | 11" | 39'-0 | 7'-2 | 4'-0 | 8" | 5'-6 | 8'-2 | #6 | 11" | 33'-6 | #6 | 11" | 23'-0 | 96 | #5 | 5½" | 11'-9 | 6'-6 |
| | 9' | 10½" | 10" | #4 | 11" | 10'-3 | #4 | 5½" | 21'-0 | 184 | #6 | 11" | 39'-0 | 7'-2 | 4'-0 | 8" | 5'-6 | 8'-2 | #6 | 11" | 33'-6 | #6 | 11" | 23'-0 | 96 | #5 | 5½" | 12'-3 | 6'-6 |
| | 10' | 10½" | 10" | #4 | 11" | 11'-3 | #4 | 5½" | 23'-0 | 198 | #6 | 11" | 39'-0 | 7'-2 | 4'-0 | 8" | 5'-6 | 8'-2 | #6 | 11" | 33'-6 | #6 | 11" | 23'-0 | 96 | #5 | 5½" | 12'-9 | 6'-6 |
| 12' | 8' | 12½" | 12" | #4 | 12" | 9'-6 | #5 | 6" | 20'-0 | 170 | #7 | 12" | 46'-9 | 8'-5 | 5'-0 | 10" | 6'-4 | 9'-9 | #6 | 12" | 40'-0 | #7 | 12" | 27'-6 | 120 | #5 | 6" | 13'-3 | 7'-8 |
| | 9' | 12½" | 12" | #4 | 12" | 10'-6 | #5 | 6" | 22'-0 | 184 | #7 | 12" | 47'-0 | 8'-7 | 5'-0 | 10" | 6'-4 | 9'-9 | #6 | 12" | 40'-0 | #7 | 12" | 27'-6 | 120 | #5 | 6" | 13'-9 | 7'-8 |
| | 10' | 12½" | 12" | #4 | 12" | 11'-6 | #5 | 6" | 24'-0 | 198 | #7 | 12" | 47'-0 | 8'-7 | 5'-0 | 10" | 6'-4 | 9'-9 | #6 | 12" | 40'-0 | #7 | 12" | 27'-6 | 120 | #5 | 6" | 14'-3 | 7'-8 |
| | 11' | 12½" | 12" | #4 | 12" | 12'-6 | #5 | 6" | 26'-0 | 198 | #7 | 12" | 47'-0 | 8'-7 | 5'-0 | 10" | 6'-4 | 9'-9 | #6 | 12" | 40'-0 | #7 | 12" | 27'-6 | 120 | #5 | 6" | 14'-9 | 7'-8 |
| | 12' | 12½" | 12" | #4 | 12" | 13'-6 | #5 | 6" | 28'-0 | 212 | #7 | 12" | 46'-9 | 8'-5 | 5'-0 | 10" | 6'-4 | 9'-9 | #6 | 12" | 40'-0 | #7 | 12" | 27'-6 | 120 | #5 | 6" | 15'-3 | 7'-8 |

✠ Total number of bars in the cross-section.

| Height "H" | "J" Dim. | "K" Spaces |
|---|---|---|
| 3' | 9" | 1 |
| 4' | 3" | 2 |
| 5' | 12" | 2 |
| 6' | 9" | 3 |
| 7' | 3" | 4 |
| 8' | 12" | 4 |
| 9' | 9" | 5 |
| 10' | 3" | 6 |
| 11' | 12" | 6 |
| 12' | 9" | 7 |

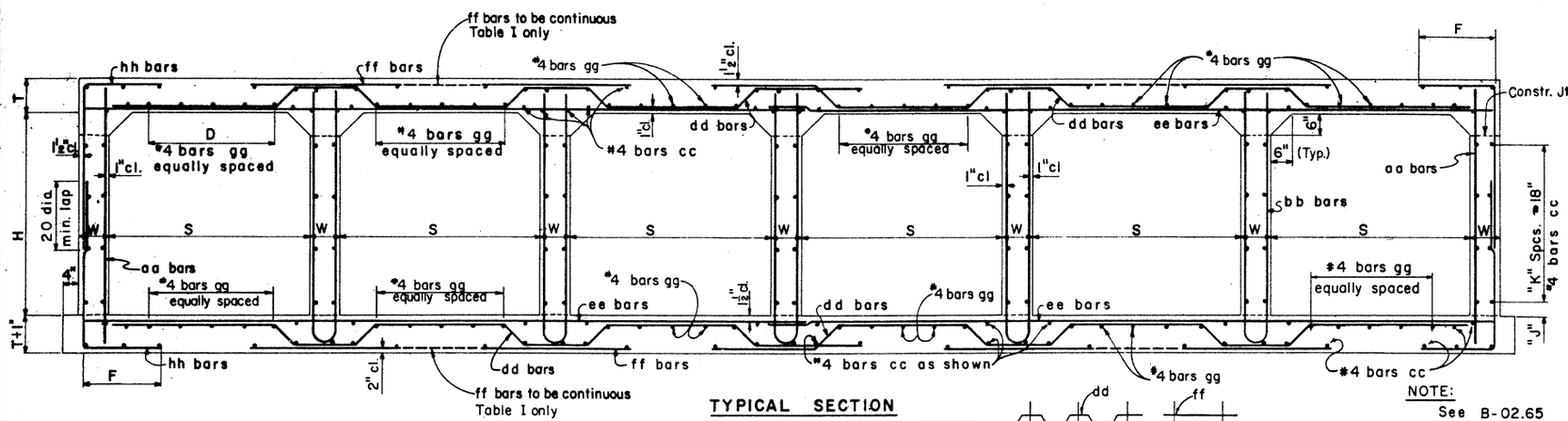


TYPICAL SECTION

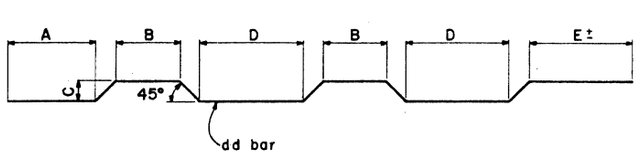


BENDS

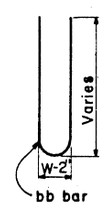


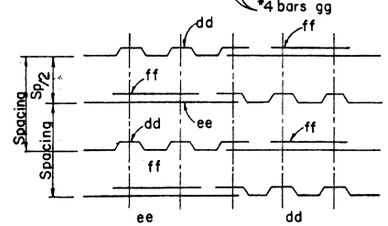


SIX BARREL REINF. PLACING DIAGRAM
For Table I only

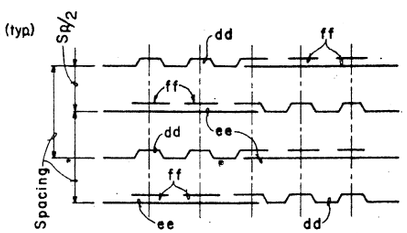


SIX BARREL REINF. PLACING DIAGRAM
For Tables II through V

NOTE:
See B-02.65 for Tables II thru V.
See B-01.10 for general notes and miscellaneous details.
All bend dimensions are out to out of bar.

| NO. | DATE | DESCRIPTION OF REVISIONS | MADE BY | DATE |
|---|---|---|---|---|
| 1 | 12-71 | Table I ff bars & quantities | J.T.W. | 7-72 |
| 2 | 8-72 | | | |
| 3 | 3-73 | | | |

DESIGN: DRAWN: CHECKED: DRY: C.A.G. M.A.B.

DESIGN APPROVED R.C. Brickler
APPROVED FOR DISTRIBUTION E. R. Benedini

ARIZONA DEPARTMENT OF TRANSPORTATION HIGHWAYS DIVISION STANDARD PLANS

SIX BARREL BOX CULVERT

REVISION

STANDARD NO. CB-6

PLAN NO. B-02.60

## TABLE NO. II
### 10'-15' FILL

| Span "S" | Height "H" | Top Slab "T" | Walls "W" | aa Size | aa Spacing | aa Length | bb Size | bb Spacing | bb Length | cc Number⌖ | dd Size | dd Spacing | dd Length | dd A | dd B | dd C | dd D | dd E | ee Size | ee Spacing | ee Length | ff Size | ff Spacing | ff Length | gg Number⌖ | hh Size | hh Spacing | hh Length | hh F |
|---|---|---|---|---|---|---|---|---|---|---|---|---|---|---|---|---|---|---|---|---|---|---|---|---|---|---|---|---|---|
| 6' | 3' | 8" | 8" | #4 | 12" | 3'-9 | #4 | 12" | 8'-0 | 128 | #5 | 12" | 22'-9 | 4'-5 | 2'-6 | 5" | 3'-4 | 3'-8 | #4 | 12" | 20'-9 | #5 | 12" | 4'-9 | 60 | #4 | 6" | 4'-3 | 1'-9 |
| | 4' | 8" | 8" | #4 | 12" | 4'-9 | #4 | 12" | 10'-0 | 142 | #5 | 12" | 23'-0 | 4'-8 | 2'-6 | 5" | 3'-4 | 3'-8 | #4 | 12" | 20'-9 | #5 | 12" | 4'-9 | 60 | #4 | 6" | 4'-9 | 1'-9 |
| | 5' | 8" | 8" | #4 | 12" | 5'-9 | #4 | 12" | 12'-0 | 142 | #5 | 12" | 23'-0 | 4'-8 | 2'-6 | 5" | 3'-4 | 3'-8 | #4 | 12" | 20'-9 | #5 | 12" | 4'-9 | 60 | #4 | 6" | 5'-3 | 1'-9 |
| | 6' | 8" | 8" | #4 | 11" | 6'-9 | #4 | 11" | 14'-0 | 156 | #5 | 11" | 23'-0 | 4'-8 | 2'-6 | 5" | 3'-4 | 3'-8 | #4 | 11" | 20'-9 | #5 | 11" | 4'-9 | 60 | #4 | 5½" | 5'-9 | 1'-9 |
| | 7' | 8" | 8" | #4 | 11" | 7'-9 | #4 | 11" | 16'-0 | 170 | #5 | 11" | 23'-0 | 4'-8 | 2'-6 | 5" | 3'-4 | 3'-8 | #4 | 11" | 20'-9 | #5 | 11" | 4'-9 | 60 | #4 | 5½" | 6'-3 | 1'-9 |
| 8' | 3' | 10" | 9" | #4 | 12" | 4'-3 | #4 | 12" | 9'-0 | 128 | #6 | 12" | 30'-0 | 5'-11 | 3'-0 | 7½" | 4'-6 | 4'-8 | #5 | 12" | 27'-0 | #6 | 12" | 6'-3 | 72 | #5 | 6" | 5'-0 | 2'-3 |
| | 4' | 10" | 9" | #4 | 12" | 5'-3 | #4 | 12" | 11'-0 | 142 | #6 | 12" | 30'-3 | 6'-2 | 3'-0 | 7½" | 4'-6 | 4'-8 | #5 | 12" | 27'-0 | #6 | 12" | 6'-3 | 72 | #4 | 6" | 5'-3 | 2'-0 |
| | 5' | 10" | 9" | #4 | 12" | 6'-3 | #4 | 12" | 13'-0 | 142 | #6 | 12" | 30'-3 | 6'-2 | 3'-0 | 7½" | 4'-6 | 4'-8 | #5 | 12" | 27'-0 | #6 | 12" | 6'-3 | 72 | #4 | 6" | 5'-9 | 2'-0 |
| | 6' | 10" | 9" | #4 | 12" | 7'-3 | #4 | 12" | 15'-0 | 156 | #6 | 12" | 30'-3 | 6'-2 | 3'-0 | 7½" | 4'-6 | 4'-8 | #5 | 12" | 27'-0 | #6 | 12" | 6'-3 | 72 | #4 | 6" | 6'-3 | 2'-0 |
| | 7' | 10" | 9" | #4 | 12" | 8'-3 | #4 | 12" | 17'-0 | 170 | #6 | 12" | 30'-3 | 6'-2 | 3'-0 | 7½" | 4'-6 | 4'-8 | #5 | 12" | 27'-0 | #6 | 12" | 6'-3 | 72 | #4 | 6" | 6'-9 | 2'-0 |
| | 8' | 10" | 9" | #4 | 12" | 9'-3 | #4 | 12" | 19'-0 | 170 | #6 | 12" | 30'-3 | 6'-2 | 3'-0 | 7½" | 4'-6 | 4'-8 | #5 | 12" | 27'-0 | #6 | 12" | 6'-3 | 72 | #5 | 6" | 7'-6 | 2'-3 |
| 10' | 3' | 12" | 10" | #4 | 13" | 4'-6 | #4 | 13" | 9'-6 | 128 | #7 | 13" | 37'-3 | 7'-6 | 3'-6 | 9½" | 5'-9 | 5'-6 | #6 | 13" | 33'-6 | #7 | 13" | 7'-6 | 84 | #5 | 6½" | 5'-3 | 2'-3 |
| | 4' | 12" | 10" | #4 | 13" | 5'-6 | #4 | 13" | 11'-6 | 142 | #7 | 13" | 37'-3 | 7'-6 | 3'-6 | 9½" | 5'-9 | 5'-6 | #6 | 13" | 33'-6 | #7 | 13" | 7'-6 | 84 | #5 | 6½" | 5'-9 | 2'-3 |
| | 5' | 12½" | 10" | #4 | 13" | 6'-6 | #4 | 13" | 13'-6 | 142 | #7 | 13" | 37'-6 | 7'-9 | 3'-6 | 10" | 5'-6 | 5'-6 | #6 | 13" | 33'-6 | #7 | 13" | 7'-6 | 84 | #5 | 6½" | 6'-3 | 2'-3 |
| | 6' | 12½" | 10" | #4 | 13" | 7'-6 | #4 | 13" | 15'-6 | 156 | #7 | 13" | 37'-6 | 7'-9 | 3'-6 | 10" | 5'-6 | 5'-6 | #6 | 13" | 33'-6 | #7 | 13" | 7'-6 | 84 | #5 | 6½" | 6'-9 | 2'-3 |
| | 7' | 12½" | 10" | #4 | 13" | 8'-6 | #4 | 13" | 17'-6 | 170 | #7 | 13" | 37'-6 | 7'-9 | 3'-6 | 10" | 5'-8 | 5'-6 | #6 | 13" | 33'-6 | #7 | 13" | 7'-6 | 84 | #5 | 6½" | 7'-3 | 2'-3 |
| | 8' | 12½" | 10" | #4 | 13" | 9'-6 | #4 | 13" | 19'-6 | 170 | #7 | 13" | 37'-6 | 7'-9 | 3'-6 | 10" | 5'-8 | 5'-6 | #6 | 13" | 33'-6 | #7 | 13" | 7'-6 | 84 | #5 | 6½" | 7'-9 | 2'-3 |
| | 9' | 12½" | 10" | #4 | 13" | 10'-6 | #4 | 13" | 21'-6 | 184 | #7 | 13" | 37'-6 | 7'-9 | 3'-6 | 10" | 5'-8 | 5'-6 | #6 | 13" | 33'-6 | #7 | 13" | 7'-6 | 84 | #5 | 6½" | 8'-3 | 2'-3 |
| | 10' | 12½" | 10" | #4 | 13" | 11'-6 | #4 | 13" | 23'-6 | 198 | #7 | 13" | 37'-6 | 7'-9 | 3'-6 | 10" | 5'-8 | 5'-6 | #6 | 13" | 33'-6 | #7 | 13" | 7'-6 | 84 | #5 | 6½" | 9'-0 | 2'-6 |
| 12' | 8' | 15" | 12" | #4 | 11" | 10'-0 | #4 | 11" | 20'-6 | 170 | #7 | 11" | 44'-6 | 8'-7 | 4'-6 | 12½" | 6'-5 | 6'-8 | #6 | 11" | 40'-0 | #7 | 11" | 8'-9 | 96 | #5 | 5½" | 8'-3 | 2'-6 |
| | 9' | 15" | 12" | #4 | 11" | 11'-0 | #4 | 11" | 22'-6 | 184 | #7 | 11" | 44'-9 | 8'-10 | 4'-6 | 12½" | 6'-5 | 6'-8 | #6 | 11" | 40'-0 | #7 | 11" | 8'-9 | 96 | #5 | 5½" | 8'-9 | 2'-6 |
| | 10' | 15" | 12" | #4 | 11" | 12'-0 | #4 | 11" | 24'-6 | 198 | #7 | 11" | 44'-6 | 8'-7 | 4'-6 | 12½" | 6'-5 | 6'-8 | #6 | 11" | 40'-0 | #7 | 11" | 8'-9 | 96 | #5 | 5½" | 9'-6 | 2'-9 |
| | 11' | 15" | 12" | #4 | 11" | 13'-0 | #4 | 11" | 26'-6 | 198 | #7 | 11" | 44'-6 | 8'-7 | 4'-6 | 12½" | 6'-5 | 6'-8 | #6 | 11" | 40'-0 | #7 | 11" | 8'-9 | 96 | #5 | 5½" | 10'-0 | 2'-9 |
| | 12' | 15" | 12" | #4 | 11" | 14'-0 | #4 | 11" | 28'-6 | 212 | #7 | 11" | 44'-6 | 8'-7 | 4'-6 | 12½" | 6'-5 | 6'-8 | #6 | 11" | 40'-0 | #7 | 11" | 8'-9 | 96 | #5 | 5½" | 10'-9 | 3'-0 |

## TABLE NO. III
### 15'-20' FILL

| Span "S" | Height "H" | Top Slab "T" | Walls "W" | aa Size | aa Spacing | aa Length | bb Size | bb Spacing | bb Length | cc Number⌖ | dd Size | dd Spacing | dd Length | dd A | dd B | dd C | dd D | dd E | ee Size | ee Spacing | ee Length | ff Size | ff Spacing | ff Length | gg Number⌖ | hh Size | hh Spacing | hh Length | hh F |
|---|---|---|---|---|---|---|---|---|---|---|---|---|---|---|---|---|---|---|---|---|---|---|---|---|---|---|---|---|---|
| 6' | 3' | 9" | 8" | #4 | 11" | 4'-0 | #4 | 11" | 8'-6 | 128 | #5 | 11" | 23'-3 | 4'-6 | 2'-6 | 6½" | 3'-1 | 3'-8 | #4 | 11" | 20'-9 | #5 | 11" | 4'-9 | 48 | #4 | 5½" | 4'-3 | 1'-8 |
| | 4' | 9" | 8" | #4 | 11" | 5'-0 | #4 | 11" | 10'-6 | 142 | #5 | 11" | 23'-3 | 4'-6 | 2'-6 | 6½" | 3'-1 | 3'-8 | #4 | 11" | 20'-9 | #5 | 11" | 4'-9 | 48 | #4 | 5½" | 4'-9 | 1'-8 |
| | 5' | 9" | 8" | #4 | 11" | 6'-0 | #4 | 11" | 12'-6 | 142 | #5 | 11" | 23'-3 | 4'-6 | 2'-6 | 6½" | 3'-1 | 3'-8 | #4 | 11" | 20'-9 | #5 | 11" | 4'-9 | 48 | #4 | 5½" | 5'-3 | 1'-8 |
| | 6' | 9" | 8" | #4 | 11" | 7'-0 | #4 | 11" | 14'-6 | 156 | #5 | 11" | 23'-3 | 4'-6 | 2'-6 | 6½" | 3'-1 | 3'-8 | #4 | 11" | 20'-9 | #5 | 11" | 4'-9 | 48 | #4 | 5½" | 5'-9 | 1'-8 |
| | 7' | 9" | 8" | #4 | 11" | 8'-0 | #4 | 11" | 16'-6 | 170 | #5 | 11" | 23'-3 | 4'-6 | 2'-6 | 6½" | 3'-1 | 3'-8 | #4 | 11" | 20'-9 | #5 | 11" | 4'-9 | 48 | #4 | 5½" | 6'-3 | 1'-8 |
| 8' | 3' | 11½" | 9" | #4 | 12" | 4'-6 | #4 | 12" | 9'-6 | 128 | #6 | 12" | 30'-6 | 6'-0 | 3'-0 | 9" | 4'-3 | 4'-8 | #5 | 12" | 27'-0 | #6 | 12" | 6'-3 | 72 | #4 | 6" | 4'-6 | 1'-9 |
| | 4' | 11½" | 9" | #4 | 12" | 5'-6 | #4 | 12" | 11'-6 | 142 | #6 | 12" | 30'-6 | 6'-0 | 3'-0 | 9" | 4'-3 | 4'-8 | #5 | 12" | 27'-0 | #6 | 12" | 6'-3 | 72 | #4 | 6" | 5'-0 | 1'-9 |
| | 5' | 11½" | 9" | #4 | 14" | 6'-6 | #4 | 14" | 13'-6 | 142 | #7 | 14" | 30'-9 | 6'-2 | 3'-0 | 9" | 4'-3 | 4'-9 | #5 | 14" | 27'-0 | #7 | 14" | 6'-6 | 72 | #5 | 7" | 6'-0 | 2'-0 |
| | 6' | 11½" | 9" | #4 | 14" | 7'-6 | #4 | 14" | 15'-6 | 156 | #7 | 14" | 30'-9 | 6'-2 | 3'-0 | 9" | 4'-3 | 4'-9 | #5 | 14" | 27'-0 | #7 | 14" | 6'-6 | 72 | #5 | 7" | 6'-6 | 2'-0 |
| | 7' | 11½" | 9" | #4 | 14" | 8'-6 | #4 | 14" | 17'-6 | 170 | #7 | 14" | 30'-9 | 6'-2 | 3'-0 | 9" | 4'-3 | 4'-9 | #5 | 14" | 27'-0 | #7 | 14" | 6'-6 | 72 | #5 | 7" | 7'-0 | 2'-0 |
| | 8' | 11½" | 9" | #4 | 14" | 9'-6 | #4 | 14" | 19'-6 | 170 | #7 | 14" | 30'-9 | 6'-5 | 2'-6 | 9" | 4'-9 | 4'-6 | #5 | 14" | 27'-0 | #7 | 14" | 6'-6 | 72 | #5 | 7" | 7'-9 | 2'-4 |
| 10' | 3' | 14½" | 10" | #4 | 18" | 5'-0 | #4 | 18" | 10'-6 | 128 | #7 | 12" | 37'-9 | 7'-9 | 3'-0 | 1'-0 | 5'-10 | 5'-3 | #6 | 12" | 33'-6 | #7 | 12" | 7'-6 | 84 | #5 | 6" | 5'-3 | 2'-0 |
| | 4' | 14½" | 10" | #4 | 18" | 6'-0 | #4 | 18" | 12'-6 | 142 | #7 | 12" | 37'-9 | 7'-9 | 3'-0 | 1'-0 | 5'-10 | 5'-3 | #6 | 12" | 33'-6 | #7 | 12" | 7'-6 | 84 | #5 | 6" | 5'-9 | 2'-0 |
| | 5' | 15" | 10" | #4 | 18" | 7'-0 | #4 | 18" | 14'-6 | 142 | #7 | 12" | 38'-3 | 7'-11 | 3'-0 | 1'-0½ | 5'-9 | 5'-3 | #6 | 12" | 33'-6 | #7 | 12" | 7'-6 | 84 | #5 | 6" | 6'-3 | 2'-0 |
| | 6' | 15" | 10" | #4 | 18" | 8'-0 | #4 | 18" | 16'-6 | 156 | #7 | 12" | 38'-3 | 7'-11 | 3'-0 | 1'-0½ | 5'-9 | 5'-3 | #6 | 12" | 33'-6 | #7 | 12" | 7'-6 | 84 | #5 | 6" | 6'-9 | 2'-0 |
| | 7' | 15" | 10" | #4 | 18" | 9'-0 | #4 | 18" | 18'-6 | 170 | #7 | 12" | 38'-3 | 7'-11 | 3'-0 | 1'-0½ | 5'-9 | 5'-3 | #6 | 12" | 33'-6 | #7 | 12" | 7'-6 | 84 | #5 | 6" | 7'-3 | 2'-0 |
| | 8' | 15" | 10" | #4 | 12" | 10'-0 | #4 | 18" | 20'-6 | 170 | #7 | 12" | 38'-3 | 7'-11 | 3'-0 | 1'-0½ | 5'-9 | 5'-3 | #6 | 12" | 33'-6 | #7 | 12" | 7'-6 | 84 | #5 | 6" | 7'-9 | 2'-0 |
| | 9' | 15" | 10" | #4 | 12" | 11'-0 | #4 | 18" | 22'-6 | 184 | #7 | 12" | 38'-0 | 7'-9 | 3'-0 | 1'-0½ | 5'-9 | 5'-3 | #6 | 12" | 33'-6 | #7 | 12" | 7'-6 | 84 | #5 | 6" | 8'-6 | 2'-4 |
| | 10' | 15" | 10" | #4 | 12" | 12'-0 | #4 | 18" | 24'-6 | 198 | #7 | 12" | 38'-0 | 7'-9 | 3'-0 | 1'-0½ | 5'-9 | 5'-3 | #6 | 12" | 33'-6 | #7 | 12" | 7'-6 | 84 | #5 | 6" | 9'-0 | 2'-4 |
| 12' | 8' | 18" | 12" | #4 | 15" | 10'-6 | #4 | 15" | 21'-6 | 170 | #7 | 10" | 45'-3 | 8'-11 | 4'-0 | 1'-3½ | 6'-5 | 6'-5 | #6 | 10" | 40'-0 | #7 | 10" | 8'-9 | 96 | #4 | 5" | 8'-3 | 2'-4 |
| | 9' | 18" | 12" | #4 | 15" | 11'-6 | #4 | 15" | 23'-6 | 184 | #7 | 10" | 45'-3 | 8'-11 | 4'-0 | 1'-3½ | 6'-5 | 6'-5 | #6 | 10" | 40'-0 | #7 | 10" | 8'-9 | 96 | #5 | 5" | 9'-0 | 2'-6 |
| | 10' | 18" | 12" | #4 | 10" | 12'-6 | #4 | 15" | 25'-6 | 198 | #7 | 10" | 45'-3 | 8'-11 | 4'-0 | 1'-3½ | 6'-5 | 6'-5 | #6 | 10" | 40'-0 | #7 | 10" | 8'-9 | 96 | #5 | 5" | 9'-6 | 2'-6 |
| | 11' | 18" | 12" | #4 | 10" | 13'-6 | #4 | 15" | 27'-6 | 198 | #7 | 10" | 45'-3 | 8'-11 | 4'-0 | 1'-3½ | 6'-5 | 6'-5 | #6 | 10" | 40'-0 | #7 | 10" | 8'-9 | 96 | #5 | 5" | 10'-0 | 2'-6 |
| | 12' | 18" | 12" | #4 | 10" | 14'-6 | #4 | 15" | 29'-6 | 212 | #7 | 10" | 45'-3 | 8'-11 | 4'-0 | 1'-3½ | 6'-5 | 6'-5 | #6 | 10" | 40'-0 | #7 | 10" | 8'-9 | 96 | #5 | 5" | 10'-9 | 2'-9 |

## TABLE NO. IV
### 20'-25' FILL

| Span "S" | Height "H" | Top Slab "T" | Walls "W" | aa Size | aa Spacing | aa Length | bb Size | bb Spacing | bb Length | cc Number⌖ | dd Size | dd Spacing | dd Length | dd A | dd B | dd C | dd D | dd E | ee Size | ee Spacing | ee Length | ff Size | ff Spacing | ff Length | gg Number⌖ | hh Size | hh Spacing | hh Length | hh F |
|---|---|---|---|---|---|---|---|---|---|---|---|---|---|---|---|---|---|---|---|---|---|---|---|---|---|---|---|---|---|
| 6' | 3' | 10½" | 8" | #4 | 11" | 4'-3 | #4 | 11" | 9'-0 | 128 | #5 | 11" | 24'-0 | 4'-8 | 2'-6 | 8" | 2'-10 | 3'-11 | #4 | 11" | 20'-9 | #5 | 11" | 5'-3 | 48 | #4 | 5½" | 4'-3 | 1'-6 |
| | 4' | 10½" | 8" | #4 | 11" | 5'-3 | #4 | 11" | 11'-0 | 142 | #5 | 11" | 24'-0 | 4'-8 | 2'-6 | 8" | 2'-10 | 3'-11 | #4 | 11" | 20'-9 | #5 | 11" | 5'-3 | 48 | #4 | 5½" | 4'-9 | 1'-6 |
| | 5' | 10½" | 8" | #4 | 11" | 6'-3 | #4 | 11" | 13'-0 | 142 | #5 | 11" | 24'-0 | 4'-8 | 2'-6 | 8" | 2'-10 | 3'-11 | #4 | 11" | 20'-9 | #5 | 11" | 5'-3 | 48 | #4 | 5½" | 5'-3 | 1'-6 |
| | 6' | 10½" | 8" | #4 | 11" | 7'-3 | #4 | 11" | 15'-0 | 156 | #5 | 11" | 24'-0 | 4'-8 | 2'-6 | 8" | 2'-10 | 3'-11 | #4 | 11" | 20'-9 | #5 | 11" | 4'-9 | 48 | #4 | 5½" | 6'-0 | 1'-9 |
| | 7' | 10½" | 8" | #4 | 11" | 8'-3 | #4 | 11" | 17'-0 | 170 | #5 | 11" | 24'-0 | 4'-8 | 2'-6 | 8" | 2'-10 | 3'-11 | #4 | 11" | 20'-9 | #5 | 11" | 4'-9 | 48 | #4 | 5½" | 6'-6 | 1'-9 |
| 8' | 3' | 13½" | 9" | #4 | 15" | 4'-9 | #4 | 15" | 10'-0 | 128 | #7 | 15" | 31'-6 | 6'-4 | 3'-0 | 11" | 3'-11 | 4'-9 | #6 | 15" | 27'-0 | #7 | 15" | 6'-6 | 60 | #5 | 7½" | 4'-9 | 1'-9 |
| | 4' | 13½" | 9" | #4 | 15" | 5'-9 | #4 | 15" | 12'-0 | 142 | #7 | 15" | 31'-6 | 6'-4 | 3'-0 | 11" | 3'-11 | 4'-9 | #6 | 15" | 27'-0 | #7 | 15" | 6'-6 | 60 | #5 | 7½" | 5'-3 | 1'-9 |
| | 5' | 13½" | 9" | #4 | 15" | 6'-9 | #4 | 15" | 14'-0 | 142 | #7 | 15" | 31'-6 | 6'-4 | 3'-0 | 11" | 3'-11 | 4'-9 | #6 | 15" | 27'-0 | #7 | 15" | 6'-6 | 60 | #5 | 7½" | 5'-9 | 1'-9 |
| | 6' | 13½" | 9" | #4 | 15" | 7'-9 | #4 | 15" | 16'-0 | 156 | #7 | 15" | 31'-6 | 6'-4 | 3'-0 | 11" | 3'-11 | 4'-9 | #6 | 15" | 27'-0 | #7 | 15" | 6'-6 | 60 | #5 | 7½" | 6'-6 | 2'-0 |
| | 7' | 13½" | 9" | #5 | 15" | 8'-9 | #4 | 15" | 18'-0 | 170 | #7 | 15" | 31'-6 | 6'-4 | 3'-0 | 11" | 3'-11 | 4'-9 | #6 | 15" | 27'-0 | #7 | 15" | 6'-6 | 60 | #5 | 7½" | 7'-0 | 2'-0 |
| | 8' | 13½" | 9" | #5 | 15" | 9'-9 | #4 | 15" | 20'-0 | 170 | #7 | 15" | 31'-6 | 6'-4 | 3'-0 | 11" | 3'-11 | 4'-9 | #6 | 15" | 27'-0 | #7 | 15" | 6'-6 | 60 | #5 | 7½" | 7'-6 | 2'-0 |
| 10' | 3' | 16½" | 10" | #4 | 18" | 5'-3 | #4 | 18" | 11'-0 | 128 | #7 | 12" | 38'-6 | 7'-10 | 3'-0 | 1'-2 | 5'-6 | 5'-3 | #6 | 12" | 33'-6 | #7 | 12" | 7'-6 | 84 | #5 | 6" | 5'-0 | 1'-9 |
| | 4' | 17" | 10" | #4 | 18" | 6'-3 | #4 | 18" | 13'-0 | 142 | #7 | 12" | 38'-6 | 7'-10 | 3'-0 | 1'-2½ | 5'-5 | 5'-3 | #6 | 12" | 33'-6 | #7 | 12" | 7'-6 | 84 | #4 | 6" | 5'-6 | 1'-9 |
| | 5' | 17" | 10" | #4 | 18" | 7'-3 | #4 | 18" | 15'-0 | 142 | #7 | 12" | 38'-6 | 7'-10 | 3'-0 | 1'-2½ | 5'-5 | 5'-3 | #6 | 12" | 33'-6 | #7 | 12" | 7'-6 | 84 | #4 | 6" | 6'-0 | 1'-9 |
| | 6' | 17" | 10" | #4 | 18" | 8'-3 | #4 | 18" | 17'-0 | 156 | #7 | 12" | 38'-6 | 7'-10 | 3'-0 | 1'-2½ | 5'-5 | 5'-3 | #6 | 12" | 33'-6 | #7 | 12" | 7'-6 | 84 | #4 | 6" | 6'-6 | 1'-9 |
| | 7' | 17" | 10" | #4 | 18" | 9'-3 | #4 | 18" | 19'-0 | 170 | #7 | 12" | 38'-6 | 7'-10 | 3'-0 | 1'-2½ | 5'-5 | 5'-3 | #6 | 12" | 33'-6 | #7 | 12" | 7'-6 | 84 | #4 | 6" | 7'-3 | 2'-0 |
| | 8' | 17" | 10" | #4 | 12" | 10'-3 | #4 | 18" | 21'-0 | 170 | #7 | 12" | 38'-6 | 7'-10 | 3'-0 | 1'-2½ | 5'-5 | 5'-3 | #6 | 12" | 33'-6 | #7 | 12" | 7'-6 | 84 | #5 | 6" | 8'-0 | 2'-0 |
| | 9' | 17" | 10" | #4 | 12" | 11'-3 | #4 | 18" | 23'-0 | 184 | #7 | 12" | 38'-6 | 7'-10 | 3'-0 | 1'-2½ | 5'-5 | 5'-3 | #6 | 12" | 33'-6 | #7 | 12" | 7'-6 | 84 | #5 | 6" | 8'-6 | 2'-0 |
| | 10' | 17" | 10" | #5 | 12" | 12'-3 | #4 | 18" | 25'-0 | 198 | #7 | 12" | 38'-6 | 7'-10 | 3'-0 | 1'-2½ | 5'-5 | 5'-3 | #6 | 12" | 33'-6 | #7 | 12" | 7'-6 | 84 | #5 | 6" | 9'-0 | 2'-3 |
| 12' | 8' | 20½" | 12" | #4 | 15" | 11'-0 | #4 | 15" | 22'-6 | 170 | #7 | 10" | 46'-0 | 8'-10 | 4'-0 | 1'-6 | 6'-0 | 6'-5 | #6 | 10" | 40'-0 | #7 | 10" | 8'-9 | 84 | #4 | 5" | 8'-3 | 2'-2 |
| | 9' | 20½" | 12" | #4 | 15" | 12'-0 | #4 | 15" | 24'-6 | 184 | #7 | 10" | 46'-0 | 8'-10 | 4'-0 | 1'-6 | 6'-0 | 6'-5 | #6 | 10" | 40'-0 | #7 | 10" | 8'-9 | 84 | #5 | 5" | 9'-0 | 2'-4 |
| | 10' | 20½" | 12" | #4 | 10" | 13'-0 | #4 | 15" | 26'-6 | 198 | #7 | 10" | 46'-0 | 8'-10 | 4'-0 | 1'-6 | 6'-0 | 6'-5 | #6 | 10" | 40'-0 | #7 | 10" | 8'-9 | 84 | #5 | 5" | 9'-9 | 2'-6 |
| | 11' | 20½" | 12" | #4 | 10" | 14'-0 | #4 | 15" | 28'-6 | 198 | #7 | 10" | 45'-9 | 8'-8 | 4'-0 | 1'-6 | 6'-0 | 6'-5 | #6 | 10" | 40'-0 | #7 | 10" | 8'-9 | 84 | #5 | 5" | 10'-3 | 2'-6 |
| | 12' | 20½" | 12" | #5 | 10" | 15'-0 | #4 | 15" | 30'-6 | 212 | #7 | 10" | 45'-9 | 8'-8 | 4'-0 | 1'-6 | 6'-0 | 6'-5 | #6 | 10" | 40'-0 | #7 | 10" | 8'-9 | 84 | #5 | 5" | 11'-0 | 2'-9 |

⌖ Total number of bars in the cross-section.

## TABLE NO. V
### 25'-30' FILL

| Span "S" | Height "H" | Top Slab "T" | Walls "W" | aa Size | aa Spacing | aa Length | bb Size | bb Spacing | bb Length | cc Number⌖ | dd Size | dd Spacing | dd Length | dd A | dd B | dd C | dd D | dd E | ee Size | ee Spacing | ee Length | ff Size | ff Spacing | ff Length | gg Number⌖ | hh Size | hh Spacing | hh Length | hh F |
|---|---|---|---|---|---|---|---|---|---|---|---|---|---|---|---|---|---|---|---|---|---|---|---|---|---|---|---|---|---|
| 6' | 3' | 11½" | 8" | #4 | 15" | 4'-6 | #4 | 15" | 9'-6 | 128 | #5 | 10" | 24'-6 | 4'-11 | 2'-0 | 9" | 3'-2 | 3'-8 | #4 | 10" | 20'-9 | #5 | 10" | 5'-3 | 48 | #4 | 5" | 4'-3 | 1'-6 |
| | 4' | 11½" | 8" | #4 | 15" | 5'-6 | #4 | 15" | 11'-6 | 142 | #5 | 10" | 24'-6 | 4'-11 | 2'-0 | 9" | 3'-2 | 3'-8 | #4 | 10" | 20'-9 | #5 | 10" | 5'-3 | 48 | #4 | 5" | 4'-9 | 1'-6 |
| | 5' | 11½" | 8" | #4 | 15" | 6'-6 | #4 | 15" | 13'-6 | 142 | #5 | 10" | 24'-3 | 4'-11 | 2'-0 | 9" | 3'-2 | 3'-8 | #4 | 10" | 20'-9 | #5 | 10" | 5'-3 | 48 | #4 | 5" | 5'-3 | 1'-6 |
| | 6' | 11½" | 8" | #4 | 15" | 7'-6 | #4 | 15" | 15'-6 | 156 | #5 | 10" | 24'-3 | 4'-11 | 2'-0 | 9" | 3'-2 | 3'-5 | #4 | 10" | 20'-9 | #5 | 10" | 4'-9 | 48 | #4 | 5" | 6'-0 | 1'-9 |
| | 7' | 11½" | 8" | #4 | 10" | 8'-6 | #4 | 15" | 17'-6 | 170 | #5 | 10" | 24'-3 | 4'-11 | 2'-0 | 9" | 3'-2 | 3'-5 | #4 | 10" | 20'-9 | #5 | 10" | 4'-9 | 48 | #4 | 5" | 6'-6 | 1'-9 |
| 8' | 3' | 15½" | 9" | #4 | 15" | 5'-0 | #4 | 15" | 10'-9 | 128 | #7 | 15" | 31'-9 | 6'-0 | 3'-0 | 1'-1 | 3'-7 | 5'-0 | #6 | 15" | 27'-0 | #7 | 15" | 7'-0 | 60 | #5 | 7½" | 5'-0 | 1'-9 |
| | 4' | 15½" | 9" | #4 | 15" | 6'-0 | #4 | 15" | 12'-9 | 142 | #7 | 15" | 31'-9 | 6'-0 | 3'-0 | 1'-1 | 3'-7 | 5'-0 | #6 | 15" | 27'-0 | #7 | 15" | 7'-0 | 60 | #5 | 7½" | 5'-6 | 1'-9 |
| | 5' | 15½" | 9" | #4 | 15" | 7'-0 | #4 | 15" | 14'-9 | 142 | #7 | 15" | 31'-6 | 6'-0 | 3'-0 | 1'-1 | 3'-7 | 4'-9 | #6 | 15" | 27'-0 | #7 | 15" | 6'-6 | 60 | #5 | 7½" | 6'-0 | 1'-9 |
| | 6' | 15½" | 9" | #5 | 15" | 8'-0 | #4 | 15" | 16'-9 | 156 | #7 | 15" | 31'-6 | 6'-0 | 3'-0 | 1'-1 | 3'-7 | 4'-9 | #6 | 15" | 27'-0 | #7 | 15" | 6'-6 | 60 | #5 | 7½" | 6'-6 | 1'-9 |
| | 7' | 15½" | 9" | #5 | 15" | 9'-0 | #4 | 15" | 18'-9 | 170 | #7 | 15" | 31'-6 | 6'-0 | 3'-0 | 1'-1 | 3'-7 | 4'-9 | #6 | 15" | 27'-0 | #7 | 15" | 6'-6 | 60 | #5 | 7½" | 7'-3 | 2'-0 |
| | 8' | 15½" | 9" | #5 | 15" | 10'-0 | #4 | 15" | 20'-9 | 170 | #7 | 15" | 31'-6 | 6'-0 | 3'-0 | 1'-1 | 3'-7 | 4'-9 | #6 | 15" | 27'-0 | #7 | 15" | 6'-6 | 60 | #5 | 7½" | 7'-9 | 2'-0 |
| 10' | 3' | 19" | 10" | #4 | 15" | 5'-9 | #4 | 15" | 11'-9 | 128 | #8 | 15" | 39'-0 | 7'-9 | 3'-0 | 1'-4½ | 5'-1 | 5'-5 | #7 | 15" | 33'-6 | #8 | 15" | 7'-9 | 72 | #5 | 7½" | 5'-3 | 1'-9 |
| | 4' | 19" | 10" | #4 | 15" | 6'-9 | #4 | 15" | 13'-9 | 142 | #8 | 15" | 39'-0 | 7'-9 | 3'-0 | 1'-4½ | 5'-1 | 5'-5 | #7 | 15" | 33'-6 | #8 | 15" | 7'-9 | 72 | #5 | 7½" | 5'-9 | 1'-9 |
| | 5' | 19" | 10" | #4 | 15" | 7'-9 | #4 | 15" | 15'-9 | 142 | #8 | 15" | 39'-0 | 7'-9 | 3'-0 | 1'-4½ | 5'-1 | 5'-5 | #7 | 15" | 33'-6 | #8 | 15" | 7'-9 | 72 | #5 | 7½" | 6'-3 | 1'-9 |
| | 6' | 19" | 10" | #4 | 15" | 8'-9 | #4 | 15" | 17'-9 | 156 | #8 | 15" | 39'-0 | 7'-9 | 3'-0 | 1'-4½ | 5'-1 | 5'-5 | #7 | 15" | 33'-6 | #8 | 15" | 7'-9 | 72 | #5 | 7½" | 6'-9 | 1'-9 |
| | 7' | 19" | 10" | #5 | 15" | 9'-9 | #4 | 15" | 19'-9 | 170 | #8 | 15" | 39'-0 | 7'-9 | 3'-0 | 1'-4½ | 5'-1 | 5'-5 | #7 | 15" | 33'-6 | #8 | 15" | 7'-9 | 72 | #5 | 7½" | 7'-3 | 1'-9 |
| | 8' | 19" | 10" | #5 | 15" | 10'-9 | #4 | 15" | 21'-9 | 170 | #8 | 15" | 39'-0 | 7'-9 | 3'-0 | 1'-4½ | 5'-1 | 5'-5 | #7 | 15" | 33'-6 | #8 | 15" | 7'-9 | 72 | #5 | 7½" | 8'-0 | 2'-0 |
| | 9' | 19" | 10" | #5 | 15" | 11'-9 | #4 | 15" | 23'-9 | 184 | #8 | 15" | 39'-0 | 7'-9 | 3'-0 | 1'-4½ | 5'-1 | 5'-5 | #7 | 15" | 33'-6 | #8 | 15" | 7'-9 | 72 | #6 | 7½" | 8'-9 | 2'-3 |
| | 10' | 19" | 10" | #6 | 15" | 12'-9 | #4 | 15" | 25'-9 | 198 | #8 | 15" | 39'-0 | 7'-9 | 3'-0 | 1'-4½ | 5'-1 | 5'-5 | #7 | 15" | 33'-6 | #8 | 15" | 7'-9 | 72 | #6 | 7½" | 9'-6 | 2'-6 |
| 12' | 8' | 23" | 12" | #4 | 12" | 11'-3 | #4 | 18" | 23'-0 | 170 | #8 | 12" | 46'-9 | 8'-10 | 4'-0 | 1'-8½ | 5'-7 | 6'-6 | #7 | 12" | 40'-0 | #8 | 12" | 9'-0 | 84 | #5 | 6" | 8'-9 | 2'-1 |
| | 9' | 23" | 12" | #4 | 12" | 12'-3 | #4 | 18" | 25'-0 | 184 | #8 | 12" | 46'-9 | 8'-10 | 4'-0 | 1'-8½ | 5'-7 | 6'-6 | #7 | 12" | 40'-0 | #8 | 12" | 9'-0 | 84 | #5 | 6" | 9'-3 | 2'-4 |
| | 10' | 23" | 12" | #5 | 12" | 14'-3 | #4 | 18" | 27'-0 | 198 | #8 | 12" | 46'-9 | 8'-10 | 4'-0 | 1'-8½ | 5'-7 | 6'-6 | #7 | 12" | 40'-0 | #8 | 12" | 9'-0 | 84 | #5 | 6" | 9'-9 | 2'-4 |
| | 11' | 23" | 12" | #5 | 12" | 15'-3 | #4 | 18" | 29'-0 | 198 | #8 | 12" | 46'-9 | 8'-10 | 4'-0 | 1'-8½ | 5'-7 | 6'-6 | #7 | 12" | 40'-0 | #8 | 12" | 9'-0 | 84 | #6 | 6" | 10'-9 | 2'-10 |
| | 12' | 23" | 12" | #6 | 12" | 15'-3 | #4 | 18" | 31'-0 | 212 | #8 | 12" | 46'-6 | 8'-7 | 4'-0 | 1'-8½ | 5'-7 | 6'-6 | #7 | 12" | 40'-0 | #8 | 12" | 9'-0 | 84 | #6 | 6" | 11'-3 | 2'-10 |

NOTE:

See B-02.60 for Table No. I, typical section, steel call-outs, bend diagrams and quantities.

See B-01.10 for general notes and miscellaneous details.

| DESIGN | DHY | 12-71 | ① | Table II, 6' span, T now 8" | JTW | 7-76 |
|---|---|---|---|---|---|---|
| DRAWN | CAG | 8-72 | ② | | | |
| CHECKED | NAB | 3-73 | ③ | | | |

(Revision block column heads: NO. / DESCRIPTION OF REVISIONS / MADE BY / DATE)

DESIGN APPROVED: R.C. Brechler

APPROVED FOR DISTRIBUTION: E.F. Sandel

ARIZONA DEPARTMENT OF TRANSPORTATION
HIGHWAYS DIVISION
STANDARD PLANS

SIX BARREL BOX CULVERT

REVISION

STANDARD NO. CB-6A

PLAN NO. B-02.65

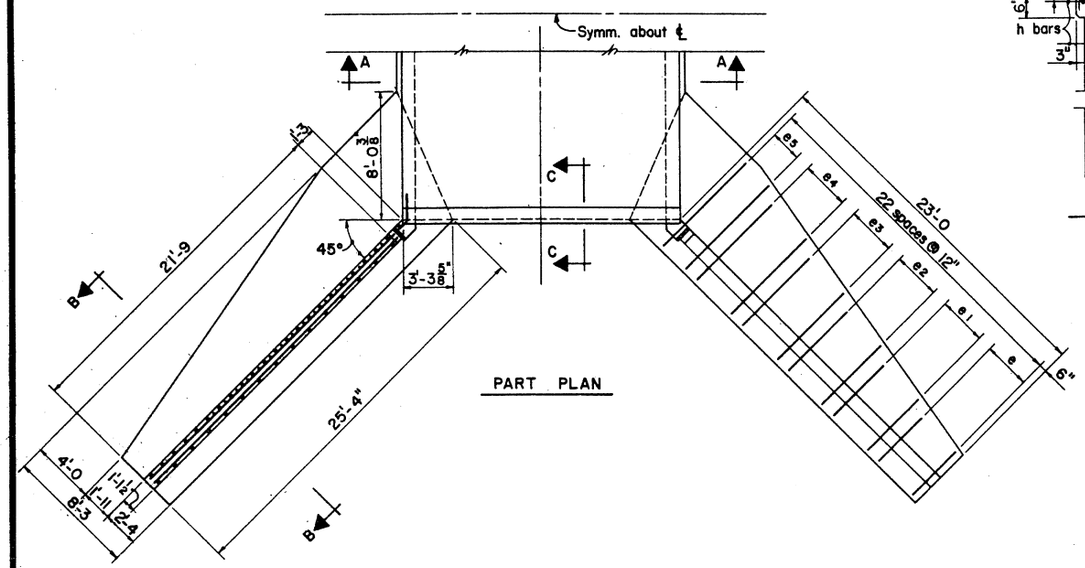


PART PLAN

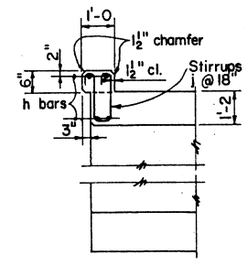


SECTION C-C

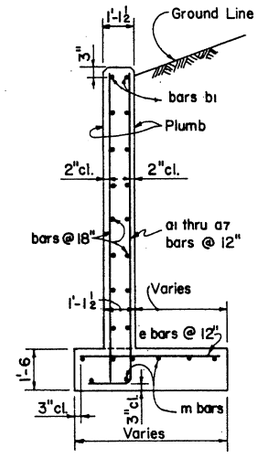


SECTION B-B

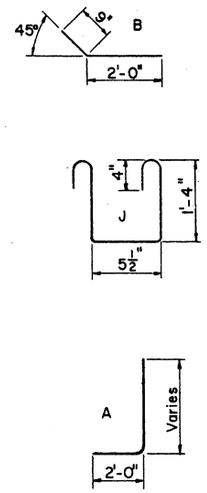


BENDS

## STEEL LISTS

| HEADWALL STEEL LIST | | | | | | | | | |
|---|---|---|---|---|---|---|---|---|---|
| Mark | Bend | Size | No. | Lgth. | Mark | Bend | Size | No. | Lgth. |
| a | A | *5 | 6 | 10'-9 | b | B | *4 | 20 | 2'-9 |
| a1 | A | *5 | 6 | 11'-9 | b1 | str. | *6 | 4 | 22'-9 |
| a2 | A | *5 | 6 | 12'-9 | b2 | str. | *4 | 20 | 21'-6 |
| a3 | A | *6 | 6 | 13'-9 | b3 | str. | *4 | 4 | 18'-6 |
| a4 | A | *6 | 6 | 14'-9 | b4 | str. | *4 | 4 | 14'-6 |
| a5 | A | *6 | 6 | 16'-0 | b5 | str. | *4 | 4 | 10'-6 |
| a6 | A | *6 | 6 | 17'-0 | b6 | str. | *4 | 4 | 6'-0 |
| a7 | A | *7 | 4 | 18'-3 | e | str. | *5 | 8 | 3'-9 |
| a8 | str. | *8 | 16 | 7'-3 | e1 | str. | *5 | 8 | 4'-6 |
| a9 | str. | *6 | 16 | 5'-3 | e2 | str. | *6 | 8 | 5'-3 |
| a10 | str. | *4 | 6 | 8'-9 | e3 | str. | *7 | 8 | 6'-0 |
| a11 | str. | *4 | 6 | 10'-3 | e4 | str. | *8 | 8 | 6'-9 |
| a12 | str. | *4 | 6 | 11'-9 | e5 | str. | *9 | 6 | 7'-3 |
| a13 | str. | *4 | 6 | 13'-3 | CURB | | | | |
| a14 | str. | *4 | 6 | 15'-0 | h | str. | *8 | 4 | 17'-6 |
| m | str. | *4 | 16 | 22'-6 | j | J | *4 | 12 | 4'-3 |

| HEADWALL QUANTITIES | | | |
|---|---|---|---|
| Concrete | 41.50 C.Y. | Steel | 3173# |

| BARREL STEEL LIST | | | | |
|---|---|---|---|---|
| FILL | TABLE I 0 to 5' | TABLE II 5.01' to 10' | TABLE III 10.01' to 15' | TABLE IV 15.01' to 20' |
| Top Slab (T) | 13.5" | 16.5" | 19.5" | 21.5" |
| Bars aa | *4 @ 18" | *4 @ 16" | *4 @ 15" | *4 @ 14" |
| Bars cc (No.) | 56 | 56 | 56 | 56 |
| Bars ee | *9 @ 9" | *9 @ 8" | *10 @ 7 1/2" | *10 @ 7" |
| Bars ee1 | *9 @ 9" | *10 @ 8" | *10 @ 7 1/2" | *10 @ 7" |
| Bars gg (No.) | 38 | 24 | 24 | 24 |
| Bars hh | *7 @ 9" | *7 @ 8" | *7 @ 7 1/2" | *7 @ 7" |
| Bars hh1 | *8 @ 9" | *8 @ 8" | *8 @ 7 1/2" | *8 @ 7" |

| BARREL QUANTITIES | | | | |
|---|---|---|---|---|
| Steel # | 392.84 | 448.45 | 500.07 | 531.97 |
| Concrete C.Y. | 2.632 | 2.971 | 3.311 | 3.537 |

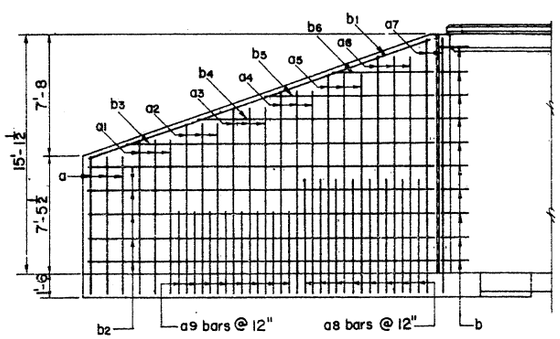


WING ELEVATION
( Back Face Reinf. )

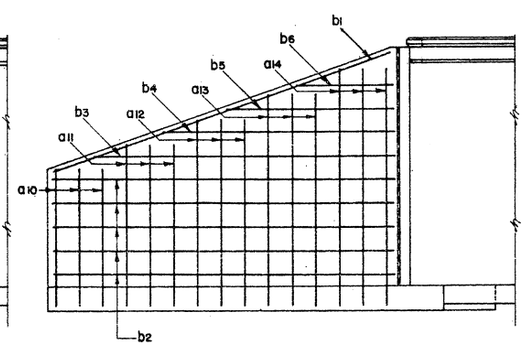


WING ELEVATION
(Front Face Reinf. )

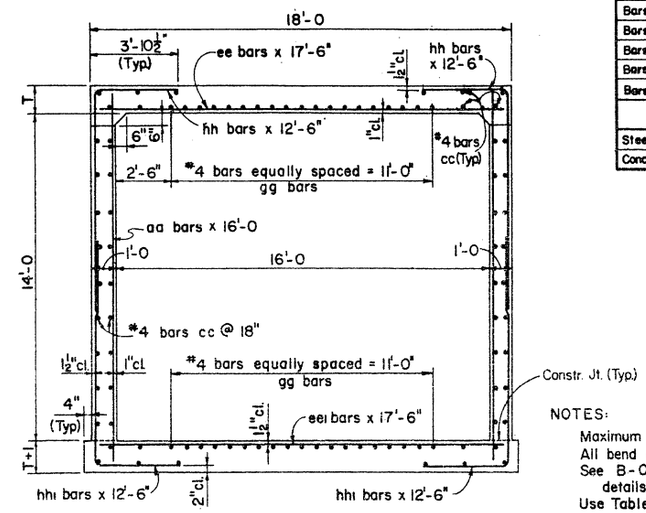


SECTION A-A

NOTES:

Maximum Fill 5 Ft. Table I to 20 Ft. Table IV.
All bend dimensions are out to out of bar.
See B-01.10 for general notes and miscellaneous details.
Use Table No. I next to headwall.

| DESIGN | DWY | 2-73 | NO. | DESCRIPTION OF REVISIONS | MADE BY | DATE |
|---|---|---|---|---|---|---|
| DRAWN | RDS | 2-73 | 1 | Wing thickness & curb height | J.T.W. | 7-76 |
| CHECKED | NAB | 3-73 | 2 | | | |
| | | | 3 | | | |

DESIGN APPROVED R.C. Buehler

APPROVED FOR DISTRIBUTION E.J. Mendlin

ARIZONA
DEPARTMENT OF TRANSPORTATION
HIGHWAYS DIVISION
STANDARD PLANS

16' x 14' EQUIPMENT PASS

REVISION

STANDARD NO. CEP-1

PLAN NO. B-03.10

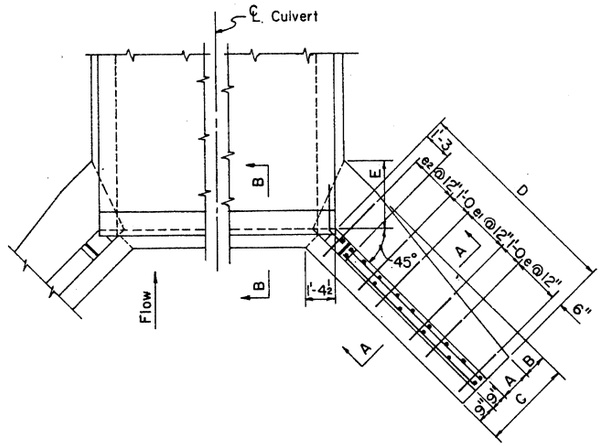


PART PLAN

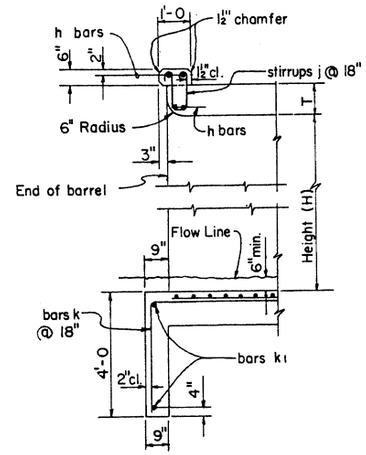


SECTION B-B

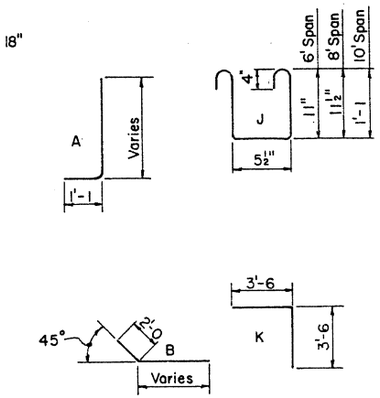


BENDS

INLET WING STEEL LIST

| Mark | Bend | 3' Height | | | 4' Height | | | 5' Height | | | 6' Height | | | 7' Height | | |
|---|---|---|---|---|---|---|---|---|---|---|---|---|---|---|---|---|
| | | No. | Size | Lgth. | No. | Size | Lgth. | No. | Size | Lgth. | No. | Size | Lgth. | No. | Size | Lgth. |
| a | A | 4 | #5 | 4'-0 | 4 | #5 | 4'-6 | 4 | #5 | 5'-3 | 4 | #5 | 6'-0 | 6 | #5 | 6'-9 |
| a1 | ✓ | 4 | ✓ | 4'-9 | 4 | ✓ | 5'-6 | 4 | ✓ | 6'-3 | 4 | ✓ | 6'-9 | 4 | ✓ | 7'-9 |
| a2 | ✓ | 4 | ✓ | 5'-6 | 2 | ✓ | 6'-3 | 4 | ✓ | 7'-0 | 6 | ✓ | 7'-6 | 6 | ✓ | 8'-6 |
| a3 | ✓ | | | | 4 | ✓ | 6'-6 | 4 | ✓ | 7'-9 | 4 | ✓ | 8'-6 | 4 | ✓ | 9'-6 |
| a4 | str. | 4 | #4 | 3'-0 | 4 | #4 | 3'-6 | 4 | #4 | 4'-3 | 4 | #4 | 5'-0 | 4 | #4 | 5'-6 |
| a5 | ✓ | 4 | ✓ | 4'-0 | 4 | ✓ | 4'-9 | 4 | ✓ | 5'-6 | 4 | ✓ | 6'-0 | 4 | ✓ | 6'-9 |
| a6 | ✓ | | | | | | | 2 | ✓ | 6'-6 | 4 | ✓ | 7'-3 | 4 | ✓ | 7'-9 |
| b | B | 6 | #4 | 2'-9 | 8 | #4 | 2'-9 | 10 | #4 | 2'-9 | 10 | #4 | 2'-9 | 12 | #4 | 2'-9 |
| b1 | str. | 4 | #6 | 4'-0 | 4 | #6 | 5'-3 | 4 | #6 | 6'-3 | 4 | #6 | 7'-6 | 4 | #6 | 8'-6 |
| b2 | ✓ | 8 | #4 | 4'-0 | 8 | #4 | 5'-0 | 12 | #4 | 6'-0 | 12 | #4 | 7'-0 | 12 | #4 | 8'-0 |
| b3 | ✓ | 4 | ✓ | 1'-6 | 4 | ✓ | 3'-6 | 4 | ✓ | 2'-3 | 4 | ✓ | 5'-0 | 4 | ✓ | 7'-0 |
| b4 | ✓ | | | | | | | | | | | | | 4 | ✓ | 3'-0 |
| e | ✓ | 10 | #4 | 1'-9 | 8 | #4 | 2'-0 | 6 | #4 | 2'-0 | 6 | #4 | 2'-3 | 6 | ✓ | 2'-3 |
| e1 | ✓ | | | | 4 | ✓ | 2'-3 | 4 | ✓ | 2'-3 | 6 | ✓ | 2'-6 | 6 | ✓ | 2'-9 |
| e2 | ✓ | | | | | | | 4 | ✓ | 2'-6 | 4 | ✓ | 3'-0 | 6 | ✓ | 3'-3 |
| g | B | 2 | #4 | 7'-3 | 2 | #4 | 8'-3 | 2 | ✓ | 9'-3 | 2 | ✓ | 10'-0 | 2 | ✓ | 11'-0 |
| m | str. | 8 | ✓ | 4'-6 | 8 | ✓ | 5'-6 | 10 | ✓ | 6'-6 | 10 | ✓ | 7'-6 | 10 | ✓ | 8'-6 |

CURB & CUT-OFF WALL STEEL LIST

| Mark | Bend | Size | 6' Spans | | | | 8' Spans | | | | 10' Spans | | | |
|---|---|---|---|---|---|---|---|---|---|---|---|---|---|---|
| | | | 1 Barrel | | ○ | ◇ | 1 Barrel | | ○ | ◇ | 1 Barrel | | ○ | ◇ |
| | | | No. | Lgth. | No. | Lgth. | No. | Lgth. | No. | Lgth. | No. | Lgth. | No. | Lgth. |
| h | str. | #6 | 4 | 7'-0 | | 6'-8 | 4 | 9'-3 | | 8'-9 | 4 | 11'-3 | | 10'-10 |
| j | J | #4 | 5 | 3'-6 | 4 | | 6 | 3'-6 | 6 | | 8 | 3'-9 | 7 | |
| k | K | ✓ | 4 | 7'-0 | 4 | | 5 | 7'-0 | 6 | | 6 | 7'-0 | 7 | |
| k1 | str. | ✓ | 2 | 4'-9 | | 6'-8 | 2 | 6'-9 | | 8'-9 | 2 | 8'-9 | | 10'-10 |

○ Additional number of bars per each extra barrel.
◇ Additional length of bars per each extra barrel.

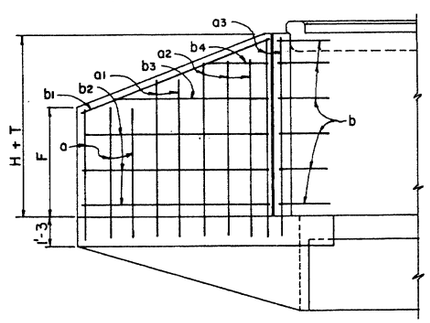


WING ELEVATION
(Back Face Reinf.)

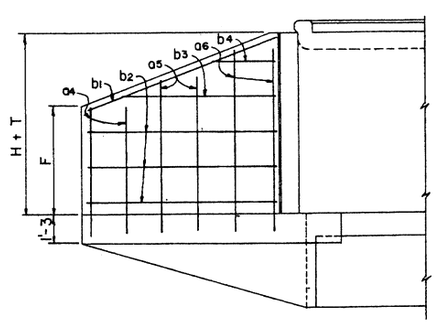


WING ELEVATION
(Front Face Reinf.)

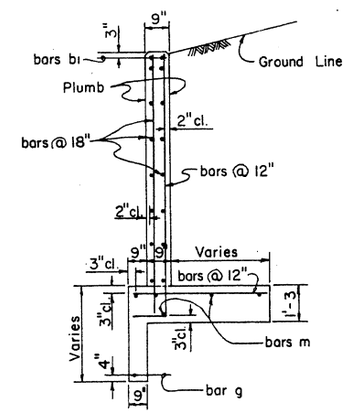


SECTION A-A

DIMENSIONS

| Height of Opening | A | B | C | D | E | F |
|---|---|---|---|---|---|---|
| 3' | 9" | 0 | 2'-3 | 5'-0 | 9" | 2'-1 |
| 4' | 11" | 4" | 2'-9 | 6'-0 | 1'-5 | 2'-8 |
| 5' | 1'-1 | 8" | 3'-3 | 7'-0 | 2'-2 | 3'-5 |
| 6' | 1'-2 | 1'-1 | 3'-9 | 8'-0 | 2'-10 | 4'-0 |
| 7' | 1'-3 | 1'-6 | 4'-3 | 9'-0 | 3'-7 | 4'-8 |

NOTE:
See B-01.10 for general notes and miscellaneous details.
See B-07.10 for concrete and steel headwall quantities.

| DESIGN | DIV | 7-72 | NO. | DESCRIPTION OF REVISIONS | MADE BY | DATE |
|---|---|---|---|---|---|---|
| DRAWN | ARJ | 7-72 | 1 | Curb height now 6" | J.T.W. | 7-76 |
| CHECKED | NAB | 3-73 | 2 | | | |
| | | | 3 | | | |

DESIGN APPROVED R.C. Brechler

APPROVED FOR DISTRIBUTION E. H. Sandelin

ARIZONA
DEPARTMENT OF TRANSPORTATION
HIGHWAYS DIVISION
STANDARD PLANS

INLET WINGS
RIGHT ANGLE CULVERT
2:1 SLOPE, HEIGHT 3' TO 7'

REVISION

STANDARD NO. CW2-1

PLAN NO. B-04.10

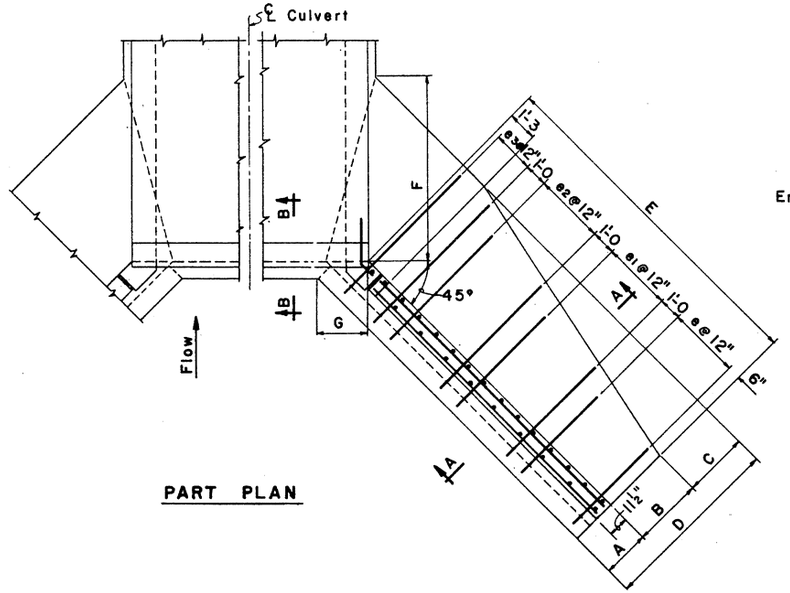


PART PLAN

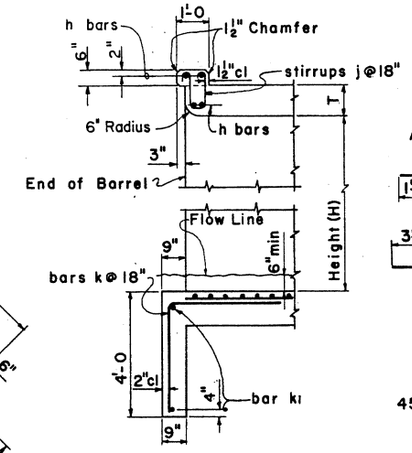


SECTION B-B

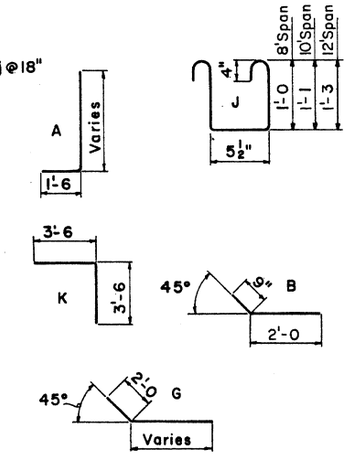


BENDS

## INLET WINGS STEEL LIST

| Mark | Bend | 8' Height | | | 9' Height | | | 10' Height | | | 11' Height | | | 12' Height | | |
|---|---|---|---|---|---|---|---|---|---|---|---|---|---|---|---|---|
| | | No | Size | Lgth | No | Size | Lgth | No | Size | Lgth | No | Size | Lgth | No | Size | Lgth |
| a | A | 2 | #6 | 11'-3 | 2 | #6 | 12'-3 | 2 | #7 | 13'-3 | 2 | #7 | 14'-3 | 2 | #7 | 15'-3 |
| a1 | ✓ | 6 | #5 | 8'-0 | 6 | #5 | 8'-9 | 6 | #5 | 9'-3 | 6 | #5 | 9'-9 | 6 | #5 | 10'-3 |
| a2 | ✓ | 6 | ✓ | 9'-3 | 6 | ✓ | 9'-9 | 6 | ✓ | 10'-6 | 6 | #6 | 11'-0 | 6 | #6 | 11'-6 |
| a3 | ✓ | 4 | ✓ | 10'-6 | 6 | #6 | 11'-0 | 6 | #6 | 11'-9 | 6 | #7 | 12'-0 | 6 | #7 | 12'-9 |
| a4 | ✓ | 2 | #6 | 11'-3 | 2 | ✓ | 12'-3 | 4 | #7 | 13'-0 | 6 | ✓ | 13'-3 | 6 | ✓ | 13'-9 |
| a5 | ✓ | | | | | | | | | | 2 | ✓ | 14'-3 | 4 | ✓ | 15'-0 |
| a6 | ✓ | | | | | | | | | | 6 | #5 | 6'-6 | 12 | #6 | 6'-9 |
| a7 | str | 6 | #4 | 6'-6 | 6 | #4 | 7'-0 | 6 | #4 | 7'-9 | 6 | #4 | 8'-3 | 6 | #4 | 8'-9 |
| a8 | ✓ | 6 | ✓ | 8'-3 | 6 | ✓ | 9'-0 | 6 | ✓ | 9'-6 | 6 | ✓ | 10'-0 | 6 | ✓ | 10'-6 |
| a9 | ✓ | | | | 2 | ✓ | 10'-9 | 4 | ✓ | 11'-3 | 6 | ✓ | 11'-9 | 6 | ✓ | 12'-3 |
| b | B | 12 | #4 | 2'-9 | 14 | ✓ | 2'-9 | 14 | ✓ | 2'-9 | 16 | ✓ | 2'-9 | 18 | ✓ | 2'-9 |
| b1 | str | 4 | #6 | 9'-6 | 4 | #6 | 10'-6 | 4 | #6 | 11'-6 | 4 | #6 | 13'-3 | 4 | #6 | 14'-3 |
| b2 | ✓ | 16 | #4 | 8'-9 | 16 | #4 | 9'-9 | 20 | #4 | 10'-9 | 20 | #4 | 12'-3 | 20 | #4 | 13'-3 |
| b3 | ✓ | 4 | ✓ | 5'-0 | 4 | ✓ | 6'-6 | 4 | ✓ | 7'-3 | 4 | ✓ | 9'-3 | 4 | ✓ | 11'-3 |
| b4 | ✓ | 4 | ✓ | 1'-3 | 4 | ✓ | 2'-9 | 4 | ✓ | 3'-6 | 4 | ✓ | 5'-6 | 4 | ✓ | 7'-6 |
| b5 | ✓ | | | | | | | | | | 4 | ✓ | 1'-6 | 4 | ✓ | 3'-9 |
| e | ✓ | 6 | #4 | 3'-0 | 6 | #4 | 3'-0 | 6 | #4 | 3'-3 | 8 | #4 | 3'-6 | 8 | #4 | 3'-9 |
| e1 | ✓ | 6 | ✓ | 3'-6 | 6 | ✓ | 3'-6 | 6 | ✓ | 4'-0 | 8 | ✓ | 4'-3 | 8 | #5 | 4'-6 |
| e2 | ✓ | 4 | ✓ | 3'-9 | 6 | ✓ | 4'-0 | 6 | #5 | 4'-6 | 6 | #5 | 5'-0 | 8 | #6 | 5'-3 |
| e3 | ✓ | 4 | ✓ | 4'-3 | 4 | #5 | 4'-9 | 6 | ✓ | 5'-0 | 6 | #6 | 5'-6 | 6 | #7 | 6'-3 |
| g | G | 2 | ✓ | 12'-9 | 2 | #4 | 14'-0 | 2 | #4 | 15'-0 | 2 | #4 | 16'-6 | 2 | #4 | 17'-9 |
| m | str | 10 | ✓ | 9'-6 | 10 | ✓ | 10'-6 | 10 | ✓ | 11'-6 | 12 | ✓ | 13'-0 | 12 | ✓ | 14'-0 |

## DIMENSIONS

| Height of Opening | A | B | C | D | E | F | G | J |
|---|---|---|---|---|---|---|---|---|
| 8' | 2'-0 | 1'-4 | 1'-5 | 4'-9 | 10'-0 | 3'-7 | 2'-1 | 5'-4 |
| 9' | 2'-1 | 1'-6 | 1'-8 | 5'-3 | 11'-0 | 4'-2 | 2'-2⅜ | 5'-11 |
| 10' | 2'-2 | 1'-8 | 1'-11 | 5'-9 | 12'-0 | 4'-9 | 2'-3¾ | 6'-7 |
| 11' | 2'-3 | 1'-10 | 2'-2 | 6'-3 | 13'-6 | 5'-4 | 2'-5⅛ | 7'-1 |
| 12' | 2'-4 | 2'-0 | 2'-5 | 6'-9 | 14'-6 | 5'-11 | 2'-6⅝ | 7'-8 |

## CURB & CUT-OFF WALL STEEL LIST

| Mark | Bend | Size | 8' Spans | | | | 10' Spans | | | | 12' Spans | | | |
|---|---|---|---|---|---|---|---|---|---|---|---|---|---|---|
| | | | 1 Barrel | | ○ | ◇ | 1 Barrel | | ○ | ◇ | 1 Barrel | | ○ | ◇ |
| | | | No | Lgth | No | Lgth | No | Lgth | No | Lgth | No | Lgth | No | Lgth |
| h | str | #6 | 4 | 9'-3 | | 8'-9 | 4 | 11'-3 | | 10'-10 | 4 | 13'-6 | | 12'-0 |
| j | J | #4 | 6 | 3'-6 | 6 | | 8 | 3'-9 | 7 | | 9 | 4'-3 | 8 | |
| k | K | ✓ | 5 | 7'-0 | 6 | | 5 | 7'-0 | 7 | | 7 | 7'-0 | 8 | |
| k1 | str | ✓ | 2 | 5'-3 | | 8'-9 | 2 | 7'-0 | | 10'-10 | 2 | 9'-0 | | 13'-0 |

○ Additional number of bars per each extra barrel.
◇ Additional length of bars per each extra barrel.

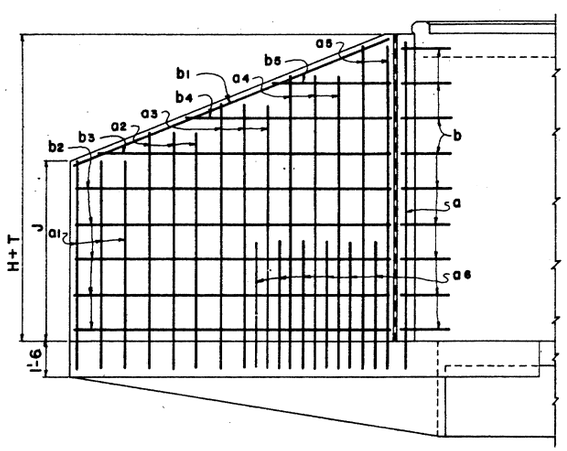


WING ELEVATION
(Back Face Reinf.)

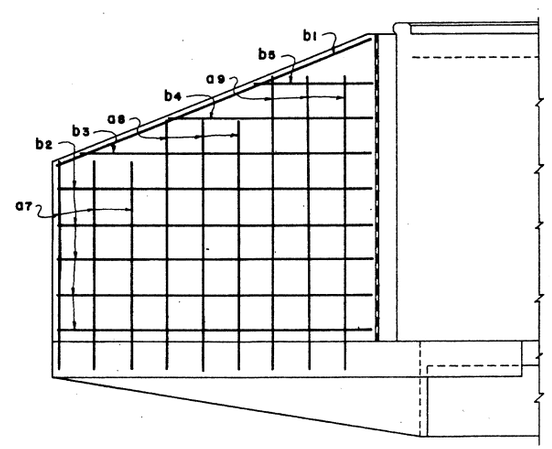


WING ELEVATION
(Front Face Reinf.)

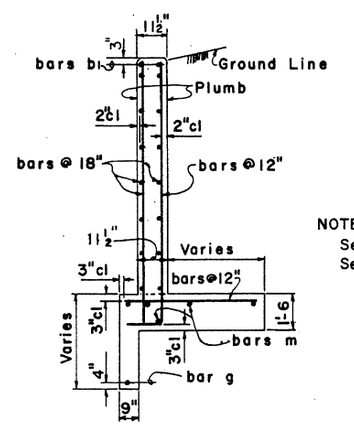


SECTION A-A

NOTE:
See B-01.10 for general notes and miscellaneous details.
See B-07.10 for concrete and steel headwall quantities.

| DESIGN | GBW, DHY | 8-72 |
|---|---|---|
| DRAWN | RWM, APV | 8-72 |
| CHECKED | WT, NAB | 3-73 |

| NO. | DESCRIPTION OF REVISIONS | MADE BY | DATE |
|---|---|---|---|
| 1 | Stirrups - 12" Span. | SEA | 10-74 |
| 2 | Wing thickness, 6" curb height. | JTW | 7-76 |
| 3 | | | |

DESIGN APPROVED R.C. Buchler
APPROVED FOR DISTRIBUTION E.H. Stendler

ARIZONA
DEPARTMENT OF TRANSPORTATION
HIGHWAYS DIVISION
STANDARD PLANS

INLET WINGS
RIGHT ANGLE CULVERT
2:1 SLOPE, HEIGHT 8' TO 12'

REVISION

STANDARD NO. CW2-2
PLAN NO. B-04.20

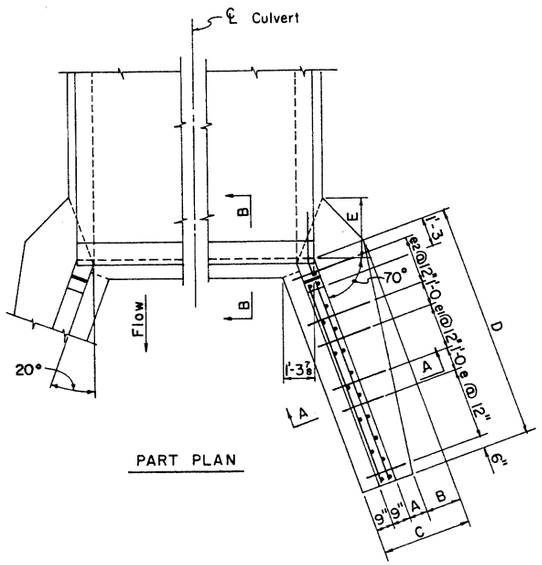


PART PLAN

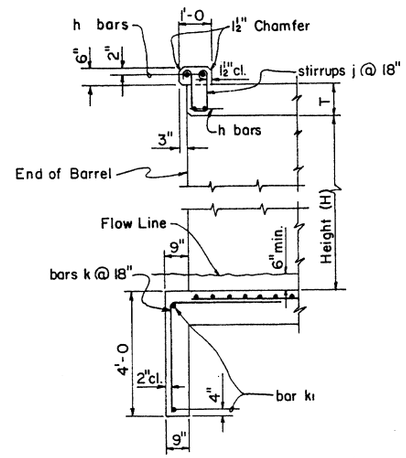


SECTION B-B

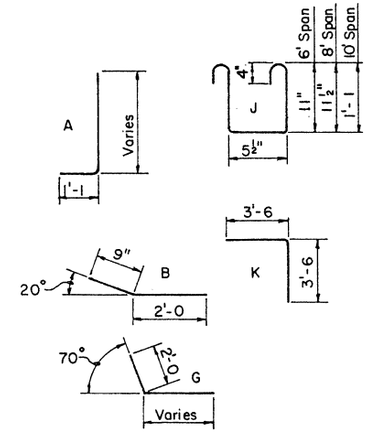


BENDS

OUTLET WINGS STEEL LIST

| Mark | Bend | 3' Height | | | 4' Height | | | 5' Height | | | 6' Height | | | 7' Height | | |
|---|---|---|---|---|---|---|---|---|---|---|---|---|---|---|---|---|
| | | No. | Size | Lgth. | No. | Size | Lgth. | No. | Size | Lgth. | No. | Size | Lgth. | No. | Size | Lgth. |
| a | A | 4 | #5 | 3'-6 | 4 | #5 | 4'-0 | 4 | #5 | 4'-6 | 6 | #5 | 4'-9 | 6 | #5 | 5'-0 |
| a1 | ✓ | 4 | ✓ | 4'-9 | 4 | ✓ | 5'-0 | 4 | ✓ | 5'-6 | 4 | ✓ | 6'-6 | 6 | ✓ | 6'-6 |
| a2 | ✓ | 4 | ✓ | 5'-9 | 2 | ✓ | 6'-3 | 4 | ✓ | 6'-9 | 4 | ✓ | 7'-6 | 6 | ✓ | 8'-3 |
| a3 | ✓ | | | | 4 | ✓ | 6'-9 | 4 | ✓ | 7'-9 | 4 | ✓ | 8'-6 | 4 | ✓ | 9'-6 |
| a4 | str. | 4 | #4 | 2'-6 | 4 | #4 | 3'-0 | 4 | #4 | 3'-6 | 4 | #4 | 3'-9 | 4 | #4 | 4'-0 |
| a5 | ✓ | 4 | ✓ | 4'-0 | 4 | ✓ | 4'-6 | 4 | ✓ | 5'-0 | 4 | ✓ | 5'-6 | 4 | ✓ | 5'-6 |
| a6 | ✓ | | | | | | | 2 | ✓ | 6'-6 | 4 | ✓ | 7'-0 | 4 | ✓ | 7'-0 |
| a7 | ✓ | | | | | | | | | | | | | 2 | ✓ | 8'-6 |
| b | B | 6 | #4 | 2'-9 | 8 | #4 | 2'-9 | 10 | #4 | 2'-9 | 10 | #4 | 2'-9 | 12 | ✓ | 2'-9 |
| b1 | str. | 4 | #6 | 4'-6 | 4 | #6 | 5'-9 | 4 | #6 | 6'-9 | 4 | #6 | 8'-3 | 4 | #6 | 10'-0 |
| b2 | ✓ | 4 | #4 | 4'-0 | 8 | #4 | 5'-0 | 8 | #4 | 6'-0 | 8 | #4 | 7'-6 | 8 | #4 | 9'-0 |
| b3 | ✓ | 4 | ✓ | 3'-3 | 4 | ✓ | 2'-6 | 4 | ✓ | 4'-6 | 4 | ✓ | 6'-3 | 4 | ✓ | 8'-0 |
| b4 | ✓ | | | | | | | 4 | ✓ | 2'-0 | 4 | ✓ | 3'-6 | 4 | ✓ | 5'-3 |
| b5 | ✓ | | | | | | | | | | | | | 4 | ✓ | 2'-3 |
| e | ✓ | 10 | #4 | 1'-9 | 6 | #4 | 2'-0 | 6 | #4 | 2'-0 | 6 | #4 | 2'-3 | 8 | ✓ | 2'-3 |
| e1 | ✓ | | | | 6 | ✓ | 2'-3 | 4 | ✓ | 2'-3 | 6 | ✓ | 2'-6 | 6 | ✓ | 2'-9 |
| e2 | ✓ | | | | | | | 4 | ✓ | 2'-6 | 6 | ✓ | 3'-0 | 6 | ✓ | 3'-3 |
| g | G | 2 | #4 | 7'-3 | 2 | #4 | 8'-3 | 2 | ✓ | 9'-0 | 2 | ✓ | 10'-6 | 2 | ✓ | 12'-0 |
| m | str. | 8 | ✓ | 4'-6 | 8 | ✓ | 5'-6 | 10 | ✓ | 6'-6 | 10 | ✓ | 8'-0 | 10 | ✓ | 9'-6 |

CURB & CUT-OFF WALL STEEL LIST

| Mark | Bend | Size | 6' Spans | | | | 8' Spans | | | | 10' Spans | | | |
|---|---|---|---|---|---|---|---|---|---|---|---|---|---|---|
| | | | 1 Barrel | | ○ | ◇ | 1 Barrel | | ○ | ◇ | 1 Barrel | | ○ | ◇ |
| | | | No. | Lgth. | No. | Lgth. | No. | Lgth. | No. | Lgth. | No. | Lgth. | No. | Lgth. |
| h | str. | #6 | 4 | 7'-0 | | 6'-8 | 4 | 9'-3 | | 8'-9 | 4 | 11'-3 | | 10'-10 |
| j | J | #4 | 5 | 3'-6 | 4 | | 6 | 3'-6 | 6 | | 8 | 3'-9 | 7 | |
| k | K | ✓ | 4 | 7'-0 | 4 | | 5 | 7'-0 | 6 | | 6 | 7'-0 | 7 | |
| k1 | str. | ✓ | 2 | 4'-9 | | 6'-8 | 2 | 6'-9 | | 8'-9 | 2 | 8'-9 | | 10'-10 |

○ Additional number of bars per each extra barrel.
◇ Additional length of bars per each extra barrel.

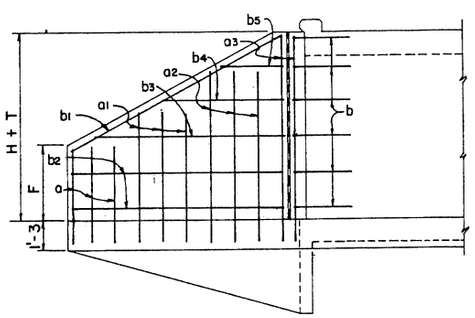


WING ELEVATION
(Back Face Reinf.)

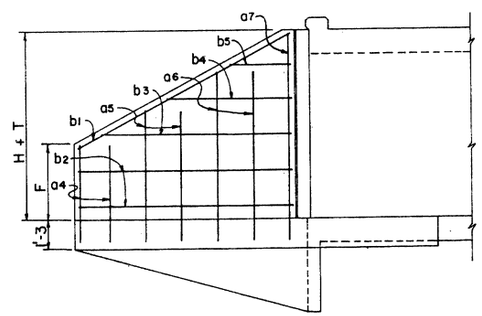


WING ELEVATION
(Front Face Reinf.)

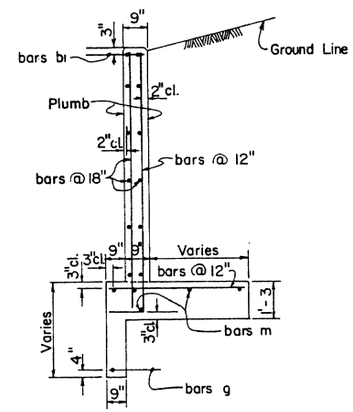


SECTION A-A

DIMENSIONS

| Height of Opening | A | B | C | D | E | F |
|---|---|---|---|---|---|---|
| 3' | 9" | 0 | 2'-3 | 5'-0 | 8" | 1'-6 |
| 4' | 11" | 4" | 2'-9 | 6'-0 | 1'-3 | 2'-0 |
| 5' | 1'-1 | 8" | 3'-3 | 7'-0 | 1'-11 | 2'-7 |
| 6' | 1'-2 | 1'-1 | 3'-9 | 8'-6 | 2'-7 | 2'-10 |
| 7' | 1'-3 | 1'-6 | 4'-3 | 10'-0 | 3'-2 | 3'-2 |

NOTE:
See B-01.10 for general notes and micellaneous details.
See B-07.10 for concrete and steel headwall quantities.

| NO. | DESCRIPTION OF REVISIONS | MADE BY | DATE |
|---|---|---|---|
| 1 | Curb height new 6" | JTW | 7-78 |
| 2 | | | |
| 3 | | | |

| | | |
|---|---|---|
| DESIGN | DHY | 7-72 |
| DRAWN | APJ | 8-72 |
| CHECKED | NAB | 3-73 |

DESIGN APPROVED
R.C. Breedlin

APPROVED FOR DISTRIBUTION
H. Hendrickson

ARIZONA
DEPARTMENT OF TRANSPORTATION
HIGHWAYS DIVISION
STANDARD PLANS

OUTLET WINGS
RIGHT ANGLE CULVERT
2:1 SLOPE, HEIGHT 3' TO 7'

REVISION

STANDARD NO.
CW2-3

PLAN NO.
B-04.30

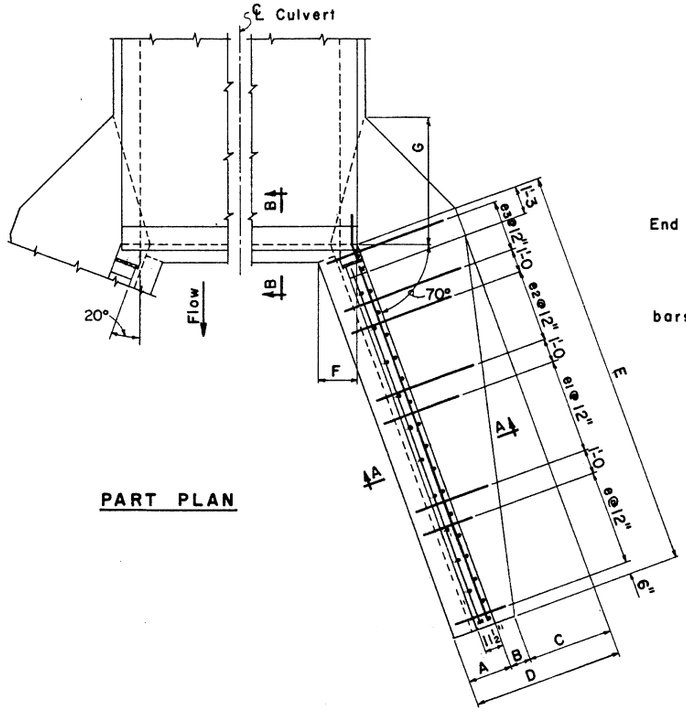


PART PLAN

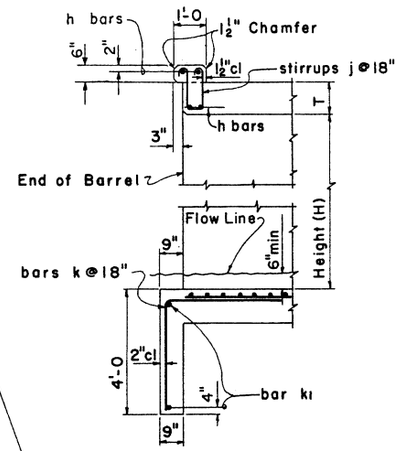


SECTION B-B

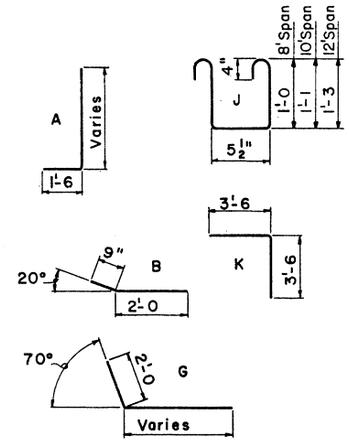


BENDS

## OUTLET WINGS STEEL LIST

| Mark | Bend | 8' Height | | | 9' Height | | | 10' Height | | | 11' Height | | | 12' Height | | |
|---|---|---|---|---|---|---|---|---|---|---|---|---|---|---|---|---|
| | | No | Size | Lgth | No | Size | Lgth | No | Size | Lgth | No | Size | Lgth | No | Size | Lgth |
| a | A | 2 | #6 | 11'-3 | 2 | #6 | 12'-3 | 2 | #7 | 13'-3 | 2 | #7 | 14'-3 | 2 | #7 | 15'-3 |
| a1 | ✓ | 6 | #5 | 6'-0 | 6 | #5 | 6'-6 | 6 | #5 | 6'-9 | 6 | #5 | 7'-3 | 6 | #5 | 7'-6 |
| a2 | ✓ | 6 | ✓ | 7'-9 | 6 | ✓ | 8'-0 | 6 | ✓ | 8'-3 | 6 | ✓ | 9'-0 | 6 | ✓ | 9'-0 |
| a3 | ✓ | 6 | ✓ | 9'-3 | 6 | ✓ | 9'-6 | 6 | ✓ | 9'-9 | 6 | #6 | 10'-3 | 6 | #6 | 10'-6 |
| a4 | ✓ | 4 | #6 | 10'-9 | 4 | #6 | 11'-3 | 6 | #6 | 11'-3 | 6 | #7 | 11'-9 | 6 | #7 | 12'-0 |
| a5 | ✓ | | | | 2 | ✓ | 12'-3 | 4 | #7 | 13'-0 | 4 | ✓ | 13'-3 | 6 | ✓ | 13'-6 |
| a6 | ✓ | | | | | | | | | | 2 | ✓ | 14'-3 | 4 | ✓ | 15'-0 |
| a7 | ✓ | | | | | | | | | | 6 | #5 | 6'-9 | 10 | #6 | 7'-3 |
| a8 | str | 6 | #4 | 4'-9 | 6 | #4 | 5'-0 | 6 | #4 | 5'-3 | 6 | #4 | 5'-6 | 6 | #4 | 6'-0 |
| a9 | ✓ | 6 | ✓ | 7'-0 | 6 | ✓ | 7'-3 | 6 | ✓ | 7'-6 | 6 | ✓ | 7'-9 | 6 | ✓ | 8'-3 |
| a10 | ✓ | 2 | ✓ | 9'-6 | 4 | ✓ | 9'-9 | 6 | ✓ | 9'-9 | 6 | ✓ | 10'-3 | 6 | ✓ | 10'-9 |
| a11 | ✓ | | | | | | | | | | 2 | ✓ | 12'-6 | 4 | ✓ | 13'-0 |
| b | B | 12 | #4 | 2'-9 | 14 | #4 | 2'-9 | 16 | #4 | 2'-9 | 16 | ✓ | 2'-9 | 18 | ✓ | 2'-9 |
| b1 | str | 4 | #6 | 11'-6 | 4 | #6 | 13'-3 | 4 | #6 | 15'-0 | 4 | #6 | 16'-6 | 4 | #6 | 17'-9 |
| b2 | ✓ | 8 | #4 | 10'-3 | 12 | #4 | 11'-9 | 12 | #4 | 13'-3 | 12 | #4 | 14'-9 | 12 | #4 | 15'-9 |
| b3 | ✓ | 4 | ✓ | 9'-6 | 4 | ✓ | 9'-3 | 4 | ✓ | 10'-9 | 4 | ✓ | 13'-0 | 4 | ✓ | 14'-9 |
| b4 | ✓ | 4 | ✓ | 6'-9 | 4 | ✓ | 6'-3 | 4 | ✓ | 7'-9 | 4 | ✓ | 10'-0 | 4 | ✓ | 11'-9 |
| b5 | ✓ | 4 | ✓ | 4'-0 | 4 | ✓ | 3'-6 | 4 | ✓ | 5'-0 | 4 | ✓ | 7'-0 | 4 | ✓ | 9'-0 |
| b6 | ✓ | | | | | | | 4 | ✓ | 2'-0 | 4 | ✓ | 4'-0 | 4 | ✓ | 6'-0 |
| b7 | ✓ | | | | | | | | | | | | | 4 | ✓ | 3'-0 |
| e | ✓ | 6 | #4 | 2'-9 | 8 | #4 | 2'-9 | 8 | #4 | 2'-9 | 10 | #4 | 3'-0 | 10 | ✓ | 3'-0 |
| e1 | ✓ | 6 | ✓ | 3'-0 | 6 | ✓ | 3'-6 | 8 | ✓ | 3'-6 | 8 | #5 | 3'-9 | 10 | #5 | 4'-0 |
| e2 | ✓ | 6 | ✓ | 3'-6 | 6 | ✓ | 4'-0 | 8 | #5 | 4'-3 | 8 | #6 | 4'-9 | 8 | #6 | 5'-0 |
| e3 | ✓ | 6 | ✓ | 4'-0 | 6 | #5 | 4'-6 | 6 | #6 | 5'-0 | 6 | ✓ | 5'-6 | 6 | #7 | 6'-0 |
| g | G | 2 | ✓ | 13'-6 | 2 | #4 | 15'-0 | 2 | #4 | 16'-3 | 2 | #4 | 17'-9 | 2 | #4 | 18'-9 |
| m | str | 10 | ✓ | 11'-0 | 10 | ✓ | 12'-6 | 12 | ✓ | 14'-0 | 12 | ✓ | 15'-6 | 12 | ✓ | 16'-6 |

## DIMENSIONS

| Height of Opening | A | B | C | D | E | F | G | J |
|---|---|---|---|---|---|---|---|---|
| 8' | 2'-0 | 1'-2 | 1'-7 | 4'-9 | 11'-6 | 1'-10¼ | 3'-2 | 3'-5 |
| 9' | 2'-1 | 1'-2 | 2'-0 | 5'-3 | 13'-0 | 1'-11¼ | 3'-9 | 3'-9 |
| 10' | 2'-2 | 1'-2 | 2'-5 | 5'-9 | 14'-6 | 2'-0⅜ | 4'-3 | 4'-0 |
| 11' | 2'-3 | 1'-2 | 2'-10 | 6'-3 | 16'-0 | 2'-1½ | 4'-10 | 4'-4 |
| 12' | 2'-4 | 1'-2 | 3'-3 | 6'-9 | 17'-0 | 2'-2½ | 5'-4 | 4'-10 |

## CURB & CUT-OFF WALL STEEL LIST

| Mark | Bend | Size | 8' Spans | | | | 10' Spans | | | | 12' Spans | | | |
|---|---|---|---|---|---|---|---|---|---|---|---|---|---|---|
| | | | 1 Barrel | | ○ | ◇ | 1 Barrel | | ○ | ◇ | 1 Barrel | | ○ | ◇ |
| | | | No | Lgth | No | Lgth | No | Lgth | No | Lgth | No | Lgth | No | Lgth |
| h | str | #6 | 4 | 9'-3 | | 8'-9 | 4 | 11'-3 | | 10'-10 | 4 | 13'-6 | | 13'-0 |
| j | J | #4 | 6 | 3'-6 | 6 | | 8 | 3'-9 | 7 | | 9 | 4'-3 | 8 | |
| k | K | ✓ | 4 | 7'-0 | 6 | | 6 | 7'-0 | 7 | | 7 | 7'-0 | 8 | |
| k1 | str | ✓ | 2 | 5'-9 | | 8'-9 | 2 | 7'-6 | | 10'-10 | 2 | 9'-6 | | 13'-0 |

○ Additional number of bars per each extra barrel.
◇ Additional length of bars per each extra barrel.

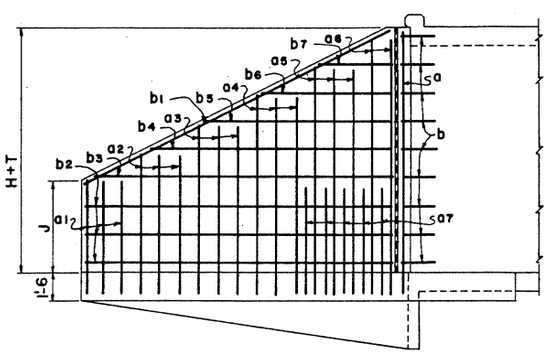


WING ELEVATION
(Back Face Reinf.)

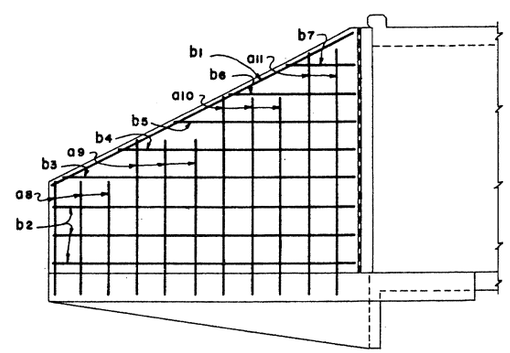


WING ELEVATION
(Front Face Reinf.)

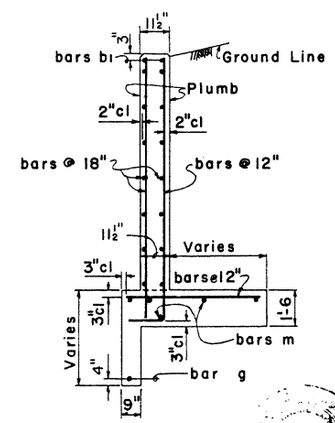


SECTION A-A

NOTE:
See B-01.10 for general notes and miscellaneous details.
See B-07.10 for concrete and steel headwall quantities.

| DESIGN | GBW, DHY | 8-72 |
|---|---|---|
| DRAWN | RWN, APJ | 8-72 |
| CHECKED | WT, NAB | 3-73 |

| NO. | DESCRIPTION OF REVISIONS | MADE BY | DATE |
|---|---|---|---|
| ① | Stirrups - 12' Span | SEA | 10-7 |
| ② | Wing thickness & curb height | JTW | 7-76 |
| ③ | | | |

| DESIGN APPROVED | ARIZONA DEPARTMENT OF TRANSPORTATION HIGHWAYS DIVISION STANDARD PLANS | REVISED |
|---|---|---|
| APPROVED, FOR DISTRIBUTION | OUTLET WINGS RIGHT ANGLE CULVERT 2:1 SLOPE, HEIGHT 8' TO 12' | STANDARD NO. CW2-4 |
| | | PLAN NO. B-0440 |

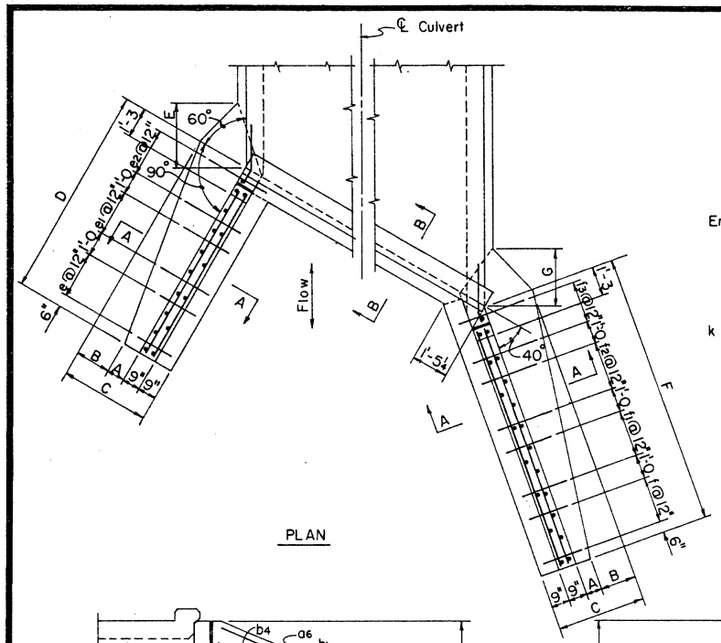


PLAN

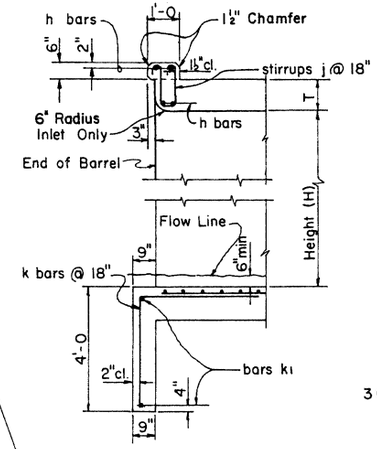


SECTION B-B

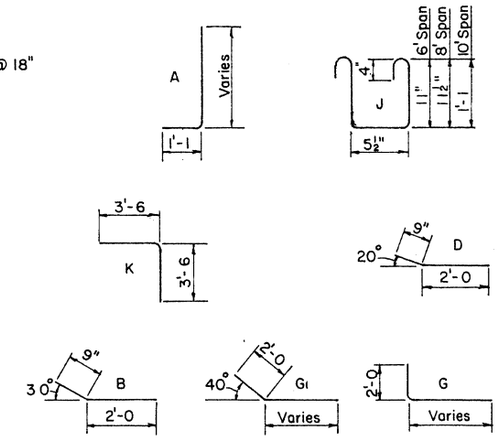


BENDS

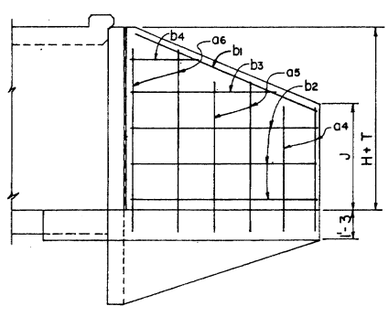


SHORT WING ELEVATION
(Front Face Reinf.)

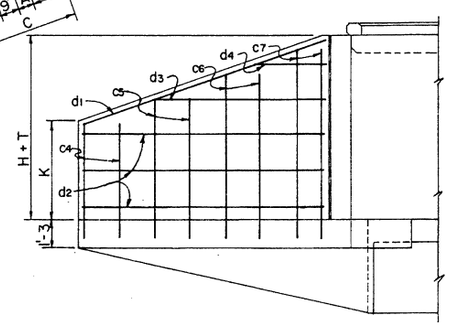


LONG WING ELEVATION
(Front Face Reinf.)

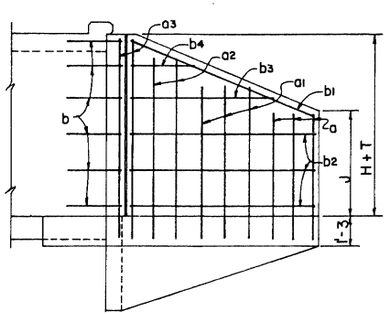


SHORT WING ELEVATION
(Back Face Reinf.)

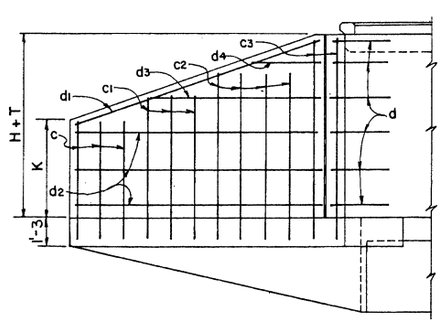


LONG WING ELEVATION
(Back Face Reinf.)

DIMENSIONS

| Height of Opening | A | B | C | D | E | F | G | J | K |
|---|---|---|---|---|---|---|---|---|---|
| 3' | 9" | 0 | 2'-3 | 5'-0 | 8" | 7'-0 | 8" | 1'-4 | 1'-7 |
| 4' | 11" | 4" | 2'-9 | 6'-0 | 1'-5 | 8'-0 | 1'-3 | 1'-10 | 2'-3 |
| 5' | 1'-1 | 8" | 3'-3 | 7'-0 | 2'-1 | 9'-0 | 1'-11 | 2'-4 | 2'-11 |
| 6' | 1'-2 | 1'-1 | 3'-9 | 8'-0 | 2'-9 | 10'-0 | 2'-7 | 2'-10 | 3'-7 |
| 7' | 1'-3 | 1'-6 | 4'-3 | 9'-0 | 3'-5 | 11'-6 | 3'-2 | 3'-4 | 4'-2 |

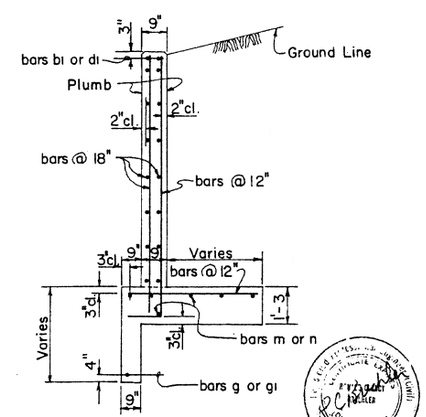


SECTION A-A

INLET OR OUTLET WINGS STEEL LIST

| Mark | Bend | 3' Height | | | 4' Height | | | 5' Height | | | 6' Height | | | 7' Height | | |
|---|---|---|---|---|---|---|---|---|---|---|---|---|---|---|---|---|
| | | No. | Size | Lgth. | No. | Size | Lgth. | No. | Size | Lgth. | No. | Size | Lgth. | No. | Size | Lgth. |
| SHORT WING | | | | | | | | | | | | | | | | |
| a | A | 2 | #5 | 3'-3 | 2 | #5 | 3'-9 | 2 | #5 | 4'-3 | 3 | #5 | 4'-9 | 3 | #5 | 5'-3 |
| a1 | ✓ | 2 | ✓ | 4'-6 | 2 | ✓ | 5'-0 | 2 | ✓ | 5'-6 | 2 | ✓ | 6'-6 | 3 | ✓ | 7'-0 |
| a2 | ✓ | 2 | ✓ | 5'-9 | 1 | ✓ | 6'-3 | 2 | ✓ | 6'-6 | 2 | ✓ | 7'-6 | 2 | ✓ | 8'-9 |
| a3 | ✓ | | | | 2 | ✓ | 6'-9 | 2 | ✓ | 7'-6 | 2 | ✓ | 8'-9 | 2 | #6 | 9'-9 |
| a4 | str. | 1 | #4 | 2'-3 | 2 | #4 | 2'-9 | 2 | #4 | 3'-3 | 2 | #4 | 3'-9 | 2 | #4 | 4'-3 |
| a5 | ✓ | 1 | ✓ | 3'-3 | 1 | ✓ | 4'-6 | 2 | ✓ | 5'-0 | 2 | ✓ | 5'-6 | 2 | ✓ | 6'-0 |
| a6 | ✓ | 2 | ✓ | 4'-3 | 1 | ✓ | 5'-6 | 1 | ✓ | 6'-6 | 2 | ✓ | 7'-3 | 2 | ✓ | 7'-9 |
| b | B | 3 | ✓ | 2'-9 | 4 | ✓ | 2'-9 | 5 | ✓ | 2'-9 | 5 | ✓ | 2'-9 | 6 | ✓ | 2'-9 |
| b1 | str. | 2 | #6 | 4'-6 | 2 | #6 | 5'-9 | 2 | #6 | 7'-0 | 2 | #6 | 8'-0 | 2 | #6 | 9'-0 |
| b2 | ✓ | 2 | #4 | 4'-0 | 4 | #4 | 5'-0 | 4 | #4 | 6'-0 | 4 | #4 | 7'-0 | 6 | #4 | 8'-0 |
| b3 | ✓ | 2 | ✓ | 3'-0 | 2 | ✓ | 2'-6 | 2 | ✓ | 4'-6 | 2 | ✓ | 6'-0 | 2 | ✓ | 5'-9 |
| b4 | ✓ | | | | | | | 2 | ✓ | 2'-0 | 2 | ✓ | 3'-6 | 2 | ✓ | 3'-0 |
| e | ✓ | 5 | #4 | 1'-9 | 2 | #4 | 1'-9 | 3 | ✓ | 2'-0 | 3 | ✓ | 2'-3 | 3 | ✓ | 2'-3 |
| e1 | ✓ | | | | 2 | ✓ | 2'-0 | 2 | ✓ | 2'-3 | 3 | ✓ | 2'-6 | 3 | ✓ | 2'-9 |
| e2 | ✓ | | | | 2 | ✓ | 2'-3 | 2 | ✓ | 2'-6 | 2 | ✓ | 3'-0 | 3 | ✓ | 3'-3 |
| g | G | 1 | #4 | 7'-6 | 1 | ✓ | 8'-3 | 1 | ✓ | 9'-6 | 1 | ✓ | 10'-3 | 1 | ✓ | 11'-3 |
| m | str. | 4 | ✓ | 4'-6 | 4 | ✓ | 5'-6 | 5 | ✓ | 6'-6 | 5 | ✓ | 7'-6 | 5 | ✓ | 8'-6 |
| LONG WING | | | | | | | | | | | | | | | | |
| c | A | 2 | #5 | 3'-6 | 2 | #5 | 4'-0 | 3 | #5 | 4'-9 | 3 | #5 | 5'-6 | 3 | #5 | 6'-0 |
| c1 | ✓ | 2 | ✓ | 4'-3 | 2 | ✓ | 5'-0 | 3 | ✓ | 6'-0 | 3 | ✓ | 6'-6 | 3 | ✓ | 7'-0 |
| c2 | ✓ | 2 | ✓ | 5'-0 | 3 | ✓ | 5'-9 | 2 | ✓ | 7'-0 | 3 | ✓ | 7'-9 | 4 | ✓ | 8'-0 |
| c3 | ✓ | 2 | ✓ | 5'-9 | 2 | ✓ | 6'-9 | 2 | ✓ | 7'-9 | 2 | ✓ | 8'-9 | 2 | #6 | 9'-6 |
| c4 | str. | 2 | #4 | 2'-6 | 2 | #4 | 3'-0 | 2 | #4 | 3'-9 | 2 | #4 | 4'-6 | 2 | #4 | 5'-0 |
| c5 | ✓ | 2 | ✓ | 3'-6 | 2 | ✓ | 4'-3 | 2 | ✓ | 5'-0 | 2 | ✓ | 5'-6 | 2 | ✓ | 6'-0 |
| c6 | ✓ | 1 | ✓ | 4'-6 | 2 | ✓ | 5'-6 | 2 | ✓ | 6'-0 | 2 | ✓ | 6'-9 | 2 | ✓ | 7'-0 |
| c7 | ✓ | | | | | | | | | | 1 | ✓ | 7'-6 | 2 | ✓ | 8'-3 |
| d | D | 3 | #4 | 2'-9 | 4 | #4 | 2'-9 | 5 | #4 | 2'-9 | 5 | ✓ | 2'-9 | 6 | ✓ | 2'-9 |
| d1 | str. | 2 | #6 | 6'-3 | 2 | #6 | 7'-3 | 2 | #6 | 8'-6 | 2 | #6 | 9'-6 | 2 | #6 | 11'-0 |
| d2 | ✓ | 2 | #4 | 6'-0 | 4 | #4 | 7'-0 | 4 | #4 | 8'-0 | 6 | #4 | 9'-0 | 6 | #4 | 10'-6 |
| d3 | ✓ | 2 | ✓ | 5'-0 | 2 | ✓ | 3'-9 | 2 | ✓ | 7'-0 | 2 | ✓ | 5'-9 | 2 | ✓ | 8'-6 |
| d4 | ✓ | | | | | | | 2 | ✓ | 3'-0 | | | | 2 | ✓ | 4'-6 |
| f | ✓ | 7 | #4 | 1'-9 | 3 | #4 | 1'-9 | 3 | #4 | 2'-0 | 3 | #4 | 2'-0 | 3 | ✓ | 2'-3 |
| f1 | ✓ | | | | 5 | ✓ | 2'-0 | 3 | ✓ | 2'-3 | 3 | ✓ | 2'-6 | 3 | ✓ | 2'-6 |
| f2 | ✓ | | | | | | | 3 | ✓ | 2'-6 | 2 | ✓ | 2'-9 | 3 | ✓ | 3'-0 |
| f3 | ✓ | | | | | | | | | | 2 | ✓ | 3'-0 | 3 | ✓ | 3'-6 |
| g1 | G1 | 1 | #4 | 9'-6 | 1 | #4 | 10'-6 | 1 | #4 | 11'-6 | 1 | ✓ | 12'-3 | 1 | ✓ | 13'-6 |
| n | str. | 4 | ✓ | 6'-6 | 4 | ✓ | 7'-6 | 5 | ✓ | 8'-6 | 5 | ✓ | 9'-6 | 5 | ✓ | 11'-0 |

CURB & CUT-OFF WALL STEEL LIST

| Mark | Bend | 6' Spans | | | | | 8' Spans | | | | | 10' Spans | | | | |
|---|---|---|---|---|---|---|---|---|---|---|---|---|---|---|---|---|
| | | 1 Barrel | | | ○ | ◇ | 1 Barrel | | | ○ | ◇ | 1 Barrel | | | ○ | ◇ |
| | | No. | Size | Lgth. | No. | Lgth. | No. | Size | Lgth. | No. | Lgth. | No. | Size | Lgth. | No. | Lgth. |
| h | str. | 4 | #6 | 8'-0 | | 7'-9 | 4 | #6 | 10'-6 | | 10'-1 | 4 | #6 | 13'-0 | | 12'-6 |
| j | J | 6 | #4 | 3'-6 | 5 | | 7 | #4 | 3'-6 | 7 | | 9 | #4 | 3'-9 | 8 | |
| k | K | 4 | ✓ | 7'-0 | 5 | | 6 | ✓ | 7'-0 | 6 | | 8 | ✓ | 7'-0 | 8 | |
| k1 | str. | 2 | ✓ | 5'-9 | | 7'-9 | 2 | ✓ | 8'-0 | | 10'-1 | 2 | ✓ | 10'-6 | | 12'-6 |

○ Additional number of bars per each extra barrel.
◇ Additional length of bars per each extra barrel.

NOTE:
See B-01.10 for general notes and miscellaneous details.
See B-07.10 for concrete and steel headwall quantities.

| DESIGN APPROVED | ARIZONA DEPARTMENT OF TRANSPORTATION HIGHWAYS DIVISION STANDARD PLANS | REVISION |
|---|---|---|
| APPROVED FOR DISTRIBUTION | INLET OR OUTLET WINGS 30° SKEW CULVERT 2:1 SLOPE, HEIGHT 3' TO 7' | STANDARD NO. CW2-5 PLAN NO. B-04.50 |

| NO. | DESCRIPTION OF REVISIONS | MADE BY | DATE |
|---|---|---|---|
| 1 | Curb height now 6" | JTW | 7-76 |
| 2 | | | |
| 3 | | | |

| | | |
|---|---|---|
| DESIGN | DHY | 7-72 |
| DRAWN | APJ | 8-72 |
| CHECKED | NAB | 3-73 |

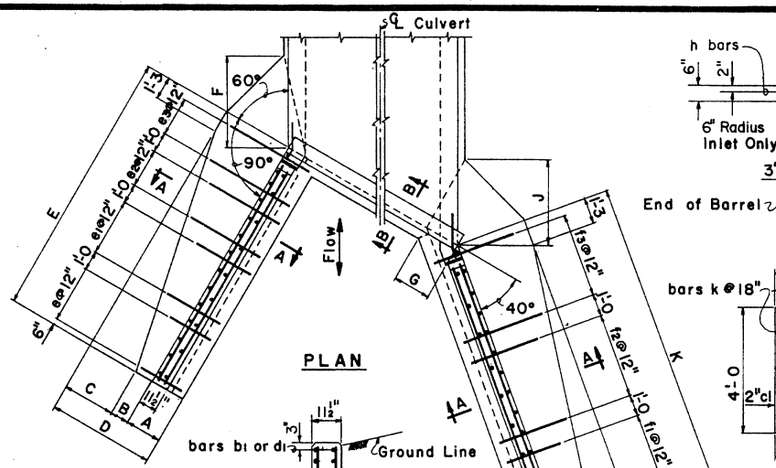


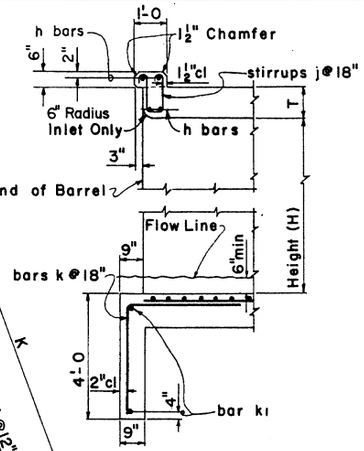


SECTION B-B

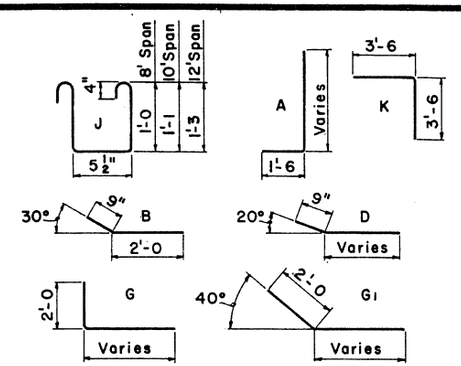


BENDS

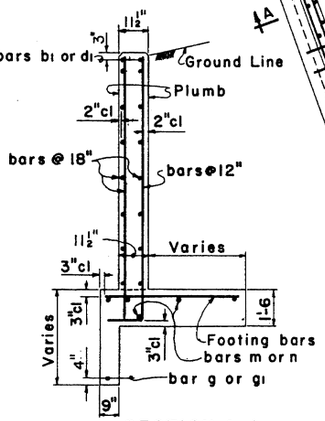


SECTION A-A

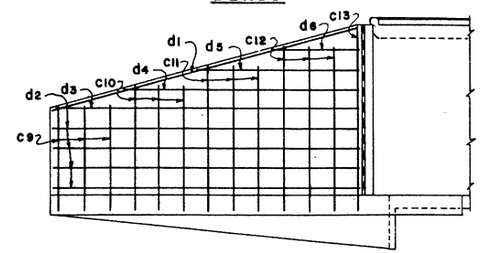

LONG WING ELEVATION
(Front Face Reinf.)

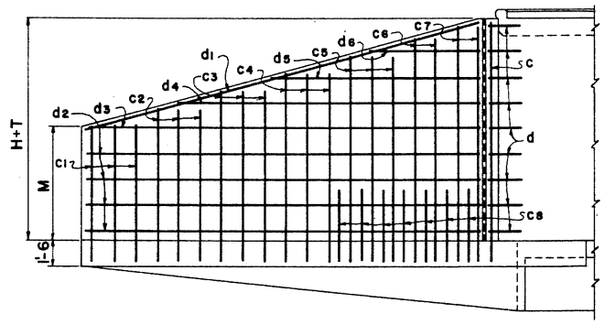

LONG WING ELEVATION
(Back Face Reinf.)

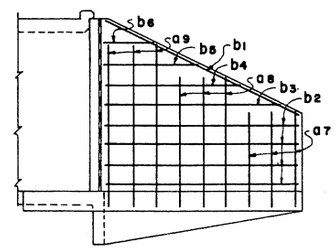

SHORT WING ELEVATION
(Front Face Reinf.)

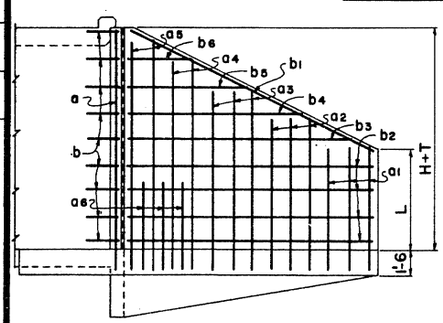

SHORT WING ELEVATION
(Back Face Reinf.)

## INLET OR OUTLET WINGS STEEL LIST

| Mark | Bend | 8' Height No | 8' Height Size | 8' Height Lgth | 9' Height No | 9' Height Size | 9' Height Lgth | 10' Height No | 10' Height Size | 10' Height Lgth | 11' Height No | 11' Height Size | 11' Height Lgth | 12' Height No | 12' Height Size | 12' Height Lgth |
|---|---|---|---|---|---|---|---|---|---|---|---|---|---|---|---|---|
| SHORT WING | | | | | | | | | | | | | | | | |
| a | A | 1 | #5 | 11'-3 | 1 | #6 | 12'-3 | 1 | #7 | 13'-3 | 1 | #7 | 14'-3 | 1 | #7 | 15'-3 |
| a1 | ✓ | 3 | ✓ | 6'-9 | 3 | #5 | 7'-3 | 3 | #5 | 7'-9 | 3 | #5 | 8'-3 | 3 | #5 | 8'-6 |
| a2 | ✓ | 3 | ✓ | 8'-6 | 3 | ✓ | 9'-0 | 3 | ✓ | 9'-6 | 3 | ✓ | 9'-9 | 3 | ✓ | 10'-3 |
| a3 | ✓ | 2 | ✓ | 10'-3 | 3 | #6 | 10'-6 | 3 | #6 | 11'-0 | 3 | #6 | 11'-6 | 3 | #7 | 11'-9 |
| a4 | ✓ | 1 | ✓ | 11'-3 | 1 | ✓ | 12'-3 | 2 | #7 | 12'-9 | 2 | #7 | 13'-3 | 2 | ✓ | 13'-6 |
| a5 | ✓ | | | | | | | | | | 1 | ✓ | 14'-3 | 2 | ✓ | 14'-6 |
| a6 | ✓ | | | | | | | | | | 2 | #5 | 6'-3 | 3 | #5 | 6'-9 |
| a7 | str | 3 | #4 | 5'-0 | 3 | #4 | 5'-6 | 3 | #4 | 6'-0 | 3 | #4 | 6'-6 | 3 | #4 | 7'-0 |
| a8 | ✓ | 2 | ✓ | 7'-9 | 3 | ✓ | 8'-3 | 3 | ✓ | 8'-6 | 3 | ✓ | 9'-0 | 3 | ✓ | 9'-6 |
| a9 | ✓ | 1 | ✓ | 9'-6 | 1 | ✓ | 10'-9 | 2 | ✓ | 11'-0 | 2 | ✓ | 11'-6 | 3 | ✓ | 12'-0 |
| b | B | 6 | ✓ | 2'-9 | 7 | ✓ | 2'-9 | 7 | ✓ | 2'-9 | 8 | ✓ | 2'-9 | 9 | ✓ | 2'-9 |
| b1 | str | 2 | #6 | 10'-0 | 2 | #6 | 11'-3 | 2 | #6 | 12'-3 | 2 | #6 | 13'-6 | 2 | #6 | 14'-6 |
| b2 | ✓ | 6 | #4 | 8'-9 | 6 | #4 | 9'-9 | 6 | #4 | 10'-9 | 8 | #4 | 11'-9 | 8 | #4 | 12'-9 |
| b3 | ✓ | 2 | ✓ | 6'-3 | 2 | ✓ | 8'-3 | 2 | ✓ | 10'-0 | 2 | ✓ | 9'-0 | 2 | ✓ | 11'-3 |
| b4 | ✓ | 2 | ✓ | 3'-9 | 2 | ✓ | 5'-6 | 2 | ✓ | 7'-3 | 2 | ✓ | 6'-3 | 2 | ✓ | 8'-3 |
| b5 | ✓ | | | | 2 | ✓ | 2'-9 | 2 | ✓ | 4'-9 | 2 | ✓ | 3'-9 | 2 | ✓ | 5'-6 |
| b6 | ✓ | | | | | | | 2 | ✓ | 2'-0 | | | | 2 | ✓ | 3'-0 |
| e | ✓ | 3 | #4 | 3'-0 | 3 | #4 | 3'-0 | 3 | ✓ | 3'-3 | 4 | #4 | 3'-3 | 4 | ✓ | 3'-6 |
| e1 | ✓ | 3 | ✓ | 3'-6 | 3 | ✓ | 3'-9 | 3 | ✓ | 3'-9 | 3 | #5 | 4'-3 | 4 | #5 | 4'-6 |
| e2 | ✓ | 2 | ✓ | 4'-0 | 3 | #5 | 4'-3 | 3 | #5 | 4'-3 | 3 | #6 | 4'-9 | 3 | #6 | 5'-3 |
| e3 | ✓ | 2 | ✓ | 4'-6 | 2 | ✓ | 5'-0 | 3 | ✓ | 5'-0 | 3 | #7 | 5'-6 | 3 | #7 | 6'-0 |
| g | G | 1 | ✓ | 11'-9 | 1 | #4 | 12'-9 | 1 | #4 | 13'-6 | 1 | #4 | 14'-6 | 1 | #4 | 15'-6 |
| m | str | 5 | ✓ | 9'-6 | 5 | ✓ | 10'-6 | 5 | ✓ | 11'-6 | 6 | ✓ | 12'-6 | 6 | ✓ | 13'-6 |
| LONG WING | | | | | | | | | | | | | | | | |
| c | A | 1 | #6 | 11'-3 | 1 | #7 | 12'-3 | 1 | #7 | 13'-3 | 1 | #7 | 14'-3 | 1 | #7 | 15'-6 |
| c1 | ✓ | 3 | #5 | 7'-3 | 3 | #5 | 7'-9 | 3 | #5 | 8'-3 | 3 | #5 | 8'-6 | 3 | #5 | 9'-0 |
| c2 | ✓ | 3 | ✓ | 8'-3 | 3 | ✓ | 8'-9 | 3 | ✓ | 9'-3 | 3 | ✓ | 9'-6 | 3 | ✓ | 10'-0 |
| c3 | ✓ | 3 | ✓ | 9'-3 | 3 | ✓ | 9'-9 | 3 | ✓ | 10'-3 | 3 | #6 | 10'-6 | 3 | #6 | 11'-0 |
| c4 | ✓ | 3 | ✓ | 10'-3 | 3 | #6 | 10'-9 | 3 | #6 | 11'-3 | 3 | #7 | 11'-6 | 3 | #7 | 12'-0 |
| c5 | ✓ | 1 | #6 | 11'-3 | 2 | #7 | 12'-0 | 3 | #7 | 12'-6 | 3 | ✓ | 12'-9 | 3 | ✓ | 13'-0 |
| c6 | ✓ | | | | | | | 1 | ✓ | 13'-3 | 3 | ✓ | 13'-9 | 2 | ✓ | 14'-3 |
| c7 | ✓ | | | | | | | | | | | | | 2 | ✓ | 14'-9 |
| c8 | ✓ | | | | | | | | | | 3 | #5 | 6'-3 | 7 | #6 | 6'-9 |
| c9 | str | 3 | #4 | 5'-9 | 3 | #4 | 6'-3 | 3 | #4 | 6'-9 | 3 | #4 | 7'-0 | 3 | #4 | 7'-6 |
| c10 | ✓ | 3 | ✓ | 7'-3 | 3 | ✓ | 7'-9 | 3 | ✓ | 8'-3 | 3 | ✓ | 8'-6 | 3 | ✓ | 9'-0 |
| c11 | ✓ | 3 | ✓ | 8'-9 | 3 | ✓ | 9'-3 | 3 | ✓ | 9'-9 | 3 | ✓ | 10'-3 | 3 | ✓ | 10'-9 |
| c12 | ✓ | | | | 1 | ✓ | 10'-9 | 2 | ✓ | 11'-3 | 3 | ✓ | 11'-9 | 3 | ✓ | 12'-3 |
| c13 | ✓ | | | | | | | | | | | | | 1 | ✓ | 13'-9 |
| d | D | 6 | #4 | 2'-9 | 7 | #4 | 2'-9 | 7 | #4 | 2'-9 | 8 | #4 | 2'-9 | 9 | ✓ | 2'-9 |
| d1 | str | 2 | #6 | 13'-0 | 2 | #6 | 14'-6 | 2 | #6 | 16'-3 | 2 | #6 | 18'-6 | 2 | #6 | 20'-0 |
| d2 | ✓ | 6 | #4 | 12'-3 | 6 | #4 | 13'-9 | 8 | #4 | 15'-3 | 8 | #4 | 17'-3 | 8 | #4 | 18'-9 |
| d3 | ✓ | 2 | ✓ | 10'-3 | 2 | ✓ | 13'-0 | 2 | ✓ | 11'-9 | 2 | ✓ | 14'-9 | 2 | ✓ | 17'-9 |
| d4 | ✓ | 2 | ✓ | 6'-0 | 2 | ✓ | 8'-9 | 2 | ✓ | 7'-6 | 2 | ✓ | 10'-6 | 2 | ✓ | 13'-6 |
| d5 | ✓ | | | | 2 | ✓ | 4'-6 | 2 | ✓ | 3'-3 | 2 | ✓ | 6'-0 | 2 | ✓ | 8'-9 |
| d6 | ✓ | | | | | | | | | | | | | 2 | ✓ | 4'-6 |
| f | ✓ | 4 | #4 | 3'-0 | 4 | #4 | 3'-0 | 5 | #4 | 3'-3 | 5 | #4 | 3'-3 | 5 | ✓ | 3'-6 |
| f1 | ✓ | 4 | ✓ | 3'-6 | 4 | ✓ | 3'-6 | 4 | ✓ | 3'-9 | 5 | ✓ | 4'-0 | 5 | #5 | 4'-3 |
| f2 | ✓ | 3 | ✓ | 4'-0 | 4 | #5 | 4'-3 | 4 | #5 | 4'-6 | 5 | #5 | 4'-9 | 5 | #6 | 5'-0 |
| f3 | ✓ | 3 | ✓ | 4'-6 | 3 | ✓ | 4'-9 | 4 | ✓ | 5'-0 | 4 | #6 | 5'-6 | 5 | #7 | 5'-9 |
| g1 | G1 | 1 | ✓ | 16'-6 | 1 | #4 | 18'-3 | 1 | #4 | 19'-9 | 1 | #4 | 21'-9 | 1 | #4 | 23'-3 |
| n | str | 5 | ✓ | 13'-0 | 5 | ✓ | 14'-6 | 5 | ✓ | 16'-0 | 6 | ✓ | 18'-0 | 6 | ✓ | 19'-6 |

## DIMENSIONS

| Height of Opening | A | B | C | D | E | F | G | J | K | L | M |
|---|---|---|---|---|---|---|---|---|---|---|---|
| 8' | 2'-0 | 1'-4 | 1'-8 | 5'-0 | 10'-0 | 3'-9 | 2'-2⅝ | 3'-6 | 13'-6 | 3'-10 | 4'-6 |
| 9' | 2'-1 | 1'-5 | 2'-0 | 5'-6 | 11'-0 | 4'-4 | 2'-4⅛ | 4'-1 | 15'-0 | 4'-4 | 5'-0 |
| 10' | 2'-2 | 1'-6 | 2'-1 | 5'-9 | 12'-0 | 4'-7 | 2'-5¾ | 4'-3 | 16'-6 | 4'-10 | 5'-6 |
| 11' | 2'-3 | 1'-7 | 2'-5 | 6'-3 | 13'-0 | 5'-2 | 2'-7¼ | 4'-10 | 18'-6 | 5'-4 | 5'-11 |
| 12' | 2'-4 | 1'-8 | 2'-9 | 6'-9 | 14'-0 | 5'-8 | 2'-8⅞ | 5'-4 | 20'-0 | 5'-10 | 6'-5 |

## CURB & CUT-OFF WALL STEEL LIST

| Mark | Bend | 8' Spans 1 Barrel No | 8' Spans 1 Barrel Size | 8' Spans 1 Barrel Lgth | 8' Spans ○ No | 8' Spans ◇ Lgth | 10' Spans 1 Barrel No | 10' Spans 1 Barrel Size | 10' Spans 1 Barrel Lgth | 10' Spans ○ No | 10' Spans ◇ Lgth | 12' Spans 1 Barrel No | 12' Spans 1 Barrel Size | 12' Spans 1 Barrel Lgth | 12' Spans ○ No | 12' Spans ◇ Lgth |
|---|---|---|---|---|---|---|---|---|---|---|---|---|---|---|---|---|
| h | str | 4 | #6 | 10'-6 | | 10'-1 | 4 | #6 | 13'-0 | | 12'-6 | 4 | #7 | 15'-9 | | 15'-0 |
| j | J | 7 | #4 | 3'-6 | 7 | | 9 | #4 | 3'-9 | 8 | | 10 | #4 | 4'-3 | 10 | |
| k | K | 5 | ✓ | 7'-0 | 6 | | 7 | ✓ | 7'-0 | 8 | | 8 | ✓ | 7'-0 | 9 | |
| k1 | str | 2 | ✓ | 6'-9 | | 10'-1 | 2 | ✓ | 8'-9 | | 12'-6 | 2 | ✓ | 11'-3 | | 15'-0 |

○ Additional number of bars per each extra barrel.
◇ Additional length of bars per each extra barrel.

NOTE:
See B-01.10 for general notes and miscellaneous details.
See B-07.10 for concrete and steel headwall quantities.

| NO. | DESCRIPTION OF REVISIONS | MADE BY | DATE |
|---|---|---|---|
| 1 | Stirrups - 12' Span | SCA | 10-74 |
| 2 | Wing thickness & curb height | JTW | 7-76 |

| | | |
|---|---|---|
| DESIGN | GBW, DHY | 8-72 |
| DRAWN | RWM, AAJ | 8-72 |
| CHECKED | WT, MAB | 3-73 |

DESIGN APPROVED R.C. Buchler

APPROVED FOR DISTRIBUTION

ARIZONA
DEPARTMENT OF TRANSPORTATION
HIGHWAYS DIVISION
STANDARD PLANS

INLET OR OUTLET WINGS
30° SKEW CULVERT
2:1 SLOPE, HEIGHT 8' TO 12'

REVISION

STANDARD NO. CW2-6

PLAN NO. B-04.60

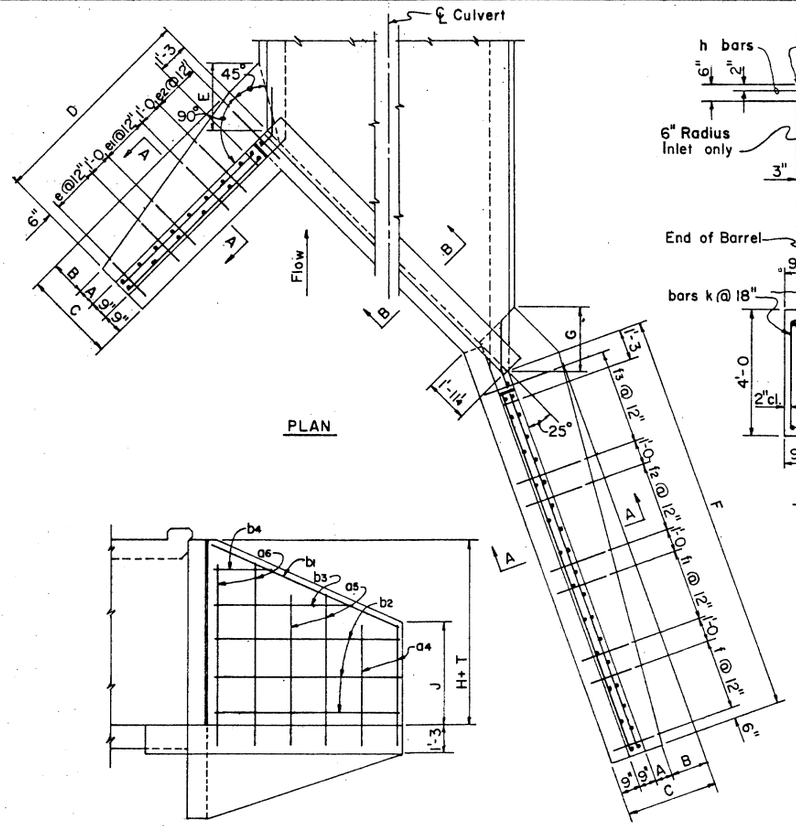


PLAN

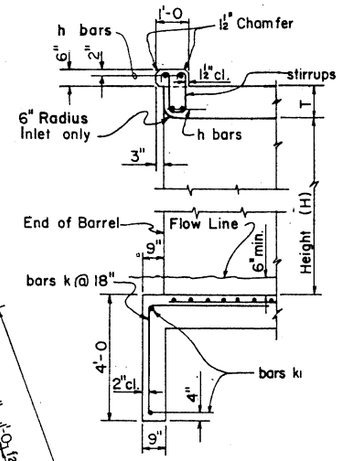


SECTION B-B

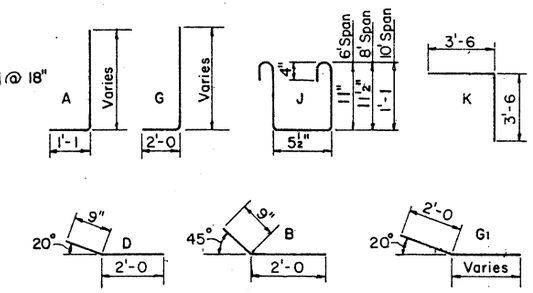


BENDS

DIMENSIONS

| Height of Opening | A | B | C | D | E | F | G | J | K |
|---|---|---|---|---|---|---|---|---|---|
| 3' | 9" | 0 | 2'-3 | 5'-0 | 9" | 9'-0 | 8" | 1'-4 | 1'-11 |
| 4' | 11" | 4" | 2'-9 | 6'-0 | 1'-5 | 11'-0 | 1'-3 | 1'-10 | 2'-6 |
| 5' | 1'-1 | 8" | 3'-3 | 7'-0 | 2'-2 | 13'-0 | 1'-11 | 2'-4 | 3'-1 |
| 6' | 1'-2 | 1'-4 | 4'-0 | 8'-0 | 3'-3 | 15'-0 | 2'-10 | 2'-10 | 3'-8 |
| 7' | 1'-3 | 1'-9 | 4'-6 | 9'-0 | 3'-11 | 17'-0 | 3'-6 | 3'-4 | 4'-3 |

INLET WINGS STEEL LIST

| Mark | Bend | 3' Height | | | 4' Height | | | 5' Height | | | 6' Height | | | 7' Height | | |
|---|---|---|---|---|---|---|---|---|---|---|---|---|---|---|---|---|
| | | No. | Size | Lgth. | No. | Size | Lgth. | No. | Size | Lgth. | No. | Size | Lgth. | No. | Size | Lgth. |
| SHORT WING | | | | | | | | | | | | | | | | |
| a | A | 2 | #5 | 3'-6 | 2 | #5 | 3'-9 | 2 | #5 | 4'-3 | 3 | #5 | 4'-9 | 3 | #5 | 5'-3 |
| a1 | ✓ | 2 | ✓ | 4'-6 | 2 | ✓ | 5'-0 | 2 | ✓ | 5'-6 | 2 | ✓ | 6'-6 | 3 | ✓ | 7'-0 |
| a2 | ✓ | 2 | ✓ | 5'-9 | 1 | ✓ | 6'-3 | 2 | ✓ | 6'-9 | 2 | ✓ | 7'-9 | 2 | ✓ | 8'-9 |
| a3 | ✓ | | | | 2 | ✓ | 6'-9 | 2 | ✓ | 7'-9 | 2 | ✓ | 8'-9 | 2 | #6 | 9'-6 |
| a4 | str. | 1 | #4 | 2'-6 | 2 | #4 | 2'-9 | 2 | #4 | 3'-3 | 2 | #4 | 3'-9 | 2 | #4 | 4'-3 |
| a5 | ✓ | 1 | ✓ | 3'-3 | 2 | ✓ | 4'-6 | 2 | ✓ | 5'-0 | 2 | ✓ | 5'-6 | 2 | ✓ | 6'-0 |
| a6 | ✓ | 2 | ✓ | 4'-3 | | | | 1 | ✓ | 6'-9 | 2 | ✓ | 7'-3 | 2 | ✓ | 7'-6 |
| b | B | 3 | #4 | 2'-9 | 4 | #4 | 2'-9 | 5 | ✓ | 2'-9 | 5 | ✓ | 2'-9 | 6 | ✓ | 2'-9 |
| b1 | str. | 2 | #6 | 4'-9 | 2 | #6 | 5'-9 | 2 | #6 | 6'-9 | 2 | #6 | 7'-9 | 2 | #6 | 9'-0 |
| b2 | ✓ | 2 | #4 | 4'-0 | 4 | #4 | 5'-0 | 4 | #4 | 6'-0 | 4 | #4 | 7'-0 | 6 | #4 | 8'-0 |
| b3 | ✓ | 2 | ✓ | 3'-0 | 2 | ✓ | 2'-9 | 2 | ✓ | 4'-3 | 2 | ✓ | 6'-0 | 2 | ✓ | 5'-0 |
| b4 | ✓ | | | | | | | 2 | ✓ | 1'-9 | 2 | ✓ | 3'-3 | 2 | ✓ | 2'-3 |
| e | ✓ | 5 | #4 | 1'-9 | 2 | #4 | 1'-9 | 3 | ✓ | 2'-0 | 3 | ✓ | 2'-3 | 3 | ✓ | 2'-3 |
| e1 | ✓ | | | | 2 | ✓ | 2'-0 | 2 | ✓ | 2'-3 | 3 | ✓ | 2'-9 | 3 | ✓ | 3'-0 |
| e2 | ✓ | | | | 2 | ✓ | 2'-3 | 2 | ✓ | 2'-6 | 2 | ✓ | 3'-3 | 3 | ✓ | 3'-6 |
| g | G | 1 | #4 | 7'-6 | 1 | ✓ | 8'-3 | 1 | ✓ | 9'-6 | 1 | ✓ | 10'-3 | 1 | ✓ | 11'-3 |
| m | str. | 4 | ✓ | 4'-6 | 4 | ✓ | 5'-6 | 4 | ✓ | 6'-6 | 5 | ✓ | 7'-6 | 5 | ✓ | 8'-6 |
| LONG WING | | | | | | | | | | | | | | | | |
| c | A | 3 | #5 | 3'-9 | 3 | #5 | 4'-3 | 3 | #5 | 5'-0 | 3 | #5 | 6'-3 | 3 | #5 | 6'-3 |
| c1 | ✓ | 3 | ✓ | 4'-6 | 3 | ✓ | 5'-0 | 3 | ✓ | 5'-9 | 3 | ✓ | 6'-9 | 3 | ✓ | 6'-9 |
| c2 | ✓ | 2 | ✓ | 5'-3 | 3 | ✓ | 5'-9 | 3 | ✓ | 6'-6 | 3 | ✓ | 7'-3 | 3 | ✓ | 7'-6 |
| c3 | ✓ | 2 | ✓ | 5'-9 | 3 | ✓ | 6'-6 | 3 | ✓ | 7'-0 | 3 | ✓ | 7'-9 | 3 | ✓ | 8'-3 |
| c4 | ✓ | | | | | | | 2 | ✓ | 7'-9 | 2 | ✓ | 8'-3 | 3 | ✓ | 8'-9 |
| c5 | ✓ | | | | | | | | | | 2 | ✓ | 8'-9 | 3 | #6 | 9'-6 |
| c6 | str. | 2 | #4 | 2'-9 | 2 | #4 | 3'-3 | 2 | #4 | 4'-0 | 2 | #4 | 5'-3 | 2 | #4 | 5'-0 |
| c7 | ✓ | 2 | ✓ | 3'-6 | 2 | ✓ | 4'-0 | 2 | ✓ | 4'-9 | 2 | ✓ | 5'-9 | 2 | ✓ | 5'-9 |
| c8 | ✓ | 2 | ✓ | 4'-3 | 2 | ✓ | 4'-9 | 2 | ✓ | 5'-3 | 2 | ✓ | 6'-3 | 2 | ✓ | 6'-6 |
| c9 | ✓ | | | | 2 | ✓ | 5'-6 | 2 | ✓ | 6'-0 | 2 | ✓ | 6'-9 | 2 | ✓ | 7'-0 |
| c10 | ✓ | | | | | | | 1 | ✓ | 6'-9 | 2 | ✓ | 7'-3 | 2 | ✓ | 7'-9 |
| c11 | ✓ | | | | | | | | | | | | | 2 | ✓ | 8'-6 |
| d | D | 3 | #4 | 2'-9 | 4 | #4 | 2'-9 | 5 | #4 | 2'-9 | 5 | #4 | 2'-9 | 6 | ✓ | 2'-9 |
| d1 | str. | 2 | #6 | 8'-0 | 2 | #6 | 10'-3 | 2 | #6 | 12'-3 | 2 | #6 | 14'-0 | 2 | #6 | 16'-6 |
| d2 | ✓ | 4 | #4 | 8'-0 | 4 | #4 | 10'-0 | 4 | #4 | 12'-0 | 6 | #4 | 14'-0 | 6 | #4 | 16'-0 |
| d3 | ✓ | | | | 2 | ✓ | 6'-6 | 2 | ✓ | 11'-0 | 2 | ✓ | 11'-0 | 2 | ✓ | 13'-3 |
| d4 | ✓ | | | | | | | 2 | ✓ | 4'-3 | | | | 2 | ✓ | 7'-0 |
| f | ✓ | 9 | #4 | 1'-9 | 11 | #4 | 2'-0 | 7 | #4 | 2'-0 | 4 | #4 | 2'-3 | 4 | #4 | 2'-3 |
| f1 | ✓ | | | | | | | 6 | ✓ | 2'-6 | 4 | ✓ | 2'-6 | 4 | ✓ | 2'-9 |
| f2 | ✓ | | | | | | | | | | 4 | ✓ | 3'-0 | 4 | ✓ | 3'-0 |
| f3 | ✓ | | | | | | | | | | 3 | ✓ | 3'-3 | 5 | ✓ | 3'-6 |
| g1 | G1 | 1 | #4 | 12'-3 | 1 | #4 | 14'-3 | 1 | #4 | 16'-0 | 1 | ✓ | 18'-0 | 1 | ✓ | 20'-0 |
| n | str. | 4 | ✓ | 9'-0 | 4 | ✓ | 11'-0 | 4 | ✓ | 13'-0 | 5 | ✓ | 15'-0 | 5 | ✓ | 17'-0 |




SHORT WING ELEVATION
(Front Face Reinf.)

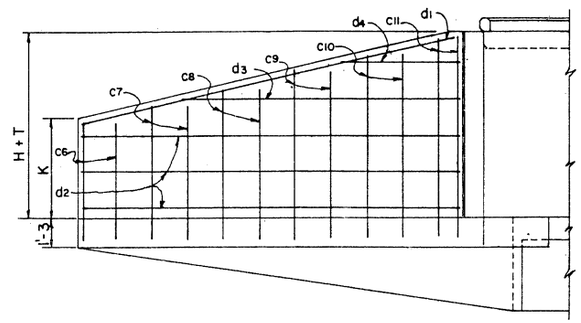


LONG WING ELEVATION
(Front Face Reinf.)

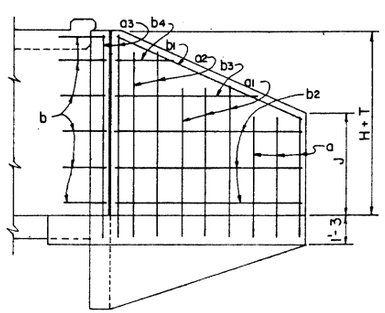


SHORT WING ELEVATION
(Back Face Reinf.)

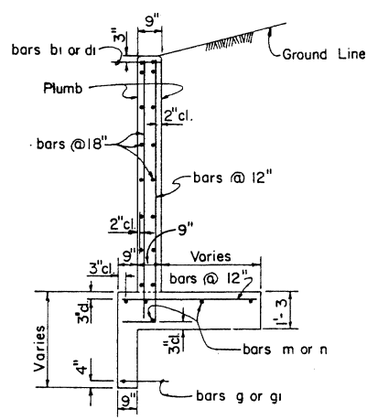


SECTION A-A

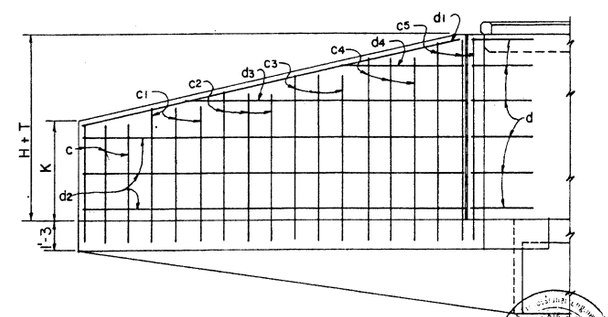


LONG WING ELEVATION
(Back Face Reinf.)

CURB & CUT-OFF WALL STEEL LIST

| Mark | Bend | 6' Spans | | | | | 8' Spans | | | | | 10' Spans | | | | |
|---|---|---|---|---|---|---|---|---|---|---|---|---|---|---|---|---|
| | | 1 Barrel | | | ○ | ◇ | 1 Barrel | | | ○ | ◇ | 1 Barrel | | | ○ | ◇ |
| | | No. | Size | Lgth. | No. | Lgth. | No. | Size | Lgth. | No. | Lgth. | No. | Size | Lgth. | No. | Lgth. |
| h | str. | 4 | #6 | 10'-0 | | 9'-6 | 4 | #6 | 13'-0 | | 12'-4 | 4 | #7 | 16'-3 | | 15'-4 |
| j | J | 7 | #4 | 13'-6 | 6 | | 9 | #4 | 13'-6 | 8 | | 11 | #4 | 13'-9 | 10 | |
| k | K | 6 | ✓ | 17'-0 | 6 | | 7 | ✓ | 17'-0 | 8 | | 9 | ✓ | 17'-0 | 10 | |
| k1 | str. | 2 | ✓ | 17'-3 | | 9'-6 | 2 | ✓ | 10'-0 | | 12'-4 | 2 | ✓ | 13'-0 | | 15'-4 |

○ Additional number of bars per each extra barrel.
◇ Additional length of bars per each extra barrel.

NOTE:
See B-01.10 for general notes and miscellaneous details.
See B-07.10 for concrete and steel headwall quantities.

| DESIGN | DHY | 7-72 | NO. | DESCRIPTION OF REVISIONS | MADE BY | DATE |
|---|---|---|---|---|---|---|
| DRAWN | APJ | 8-72 | 1 | Curb height now 6" | JTW | 7-78 |
| CHECKED | MAB | 3-73 | 2 | | | |
| | | | 3 | | | |

DESIGN APPROVED: R. C. Brechler

APPROVED FOR DISTRIBUTION: [signature]

ARIZONA
DEPARTMENT OF TRANSPORTATION
HIGHWAYS DIVISION
STANDARD PLANS

INLET OR OUTLET WINGS
45° SKEW CULVERT
2:1 SLOPE, HEIGHT 3' TO 7'

REVISION

STANDARD NO. CW2-7

PLAN NO. B-04.70

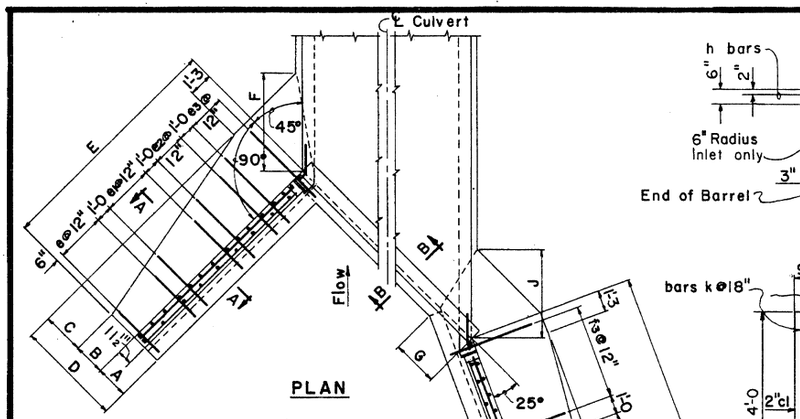


PLAN

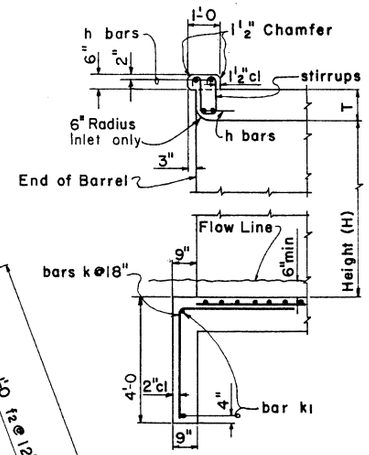


SECTION B-B

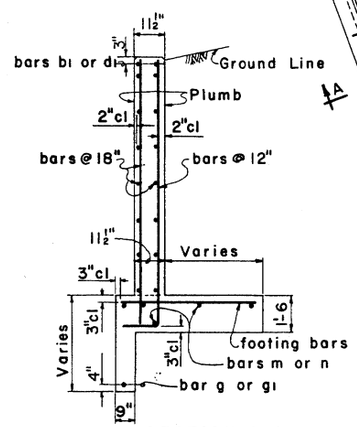


SECTION A-A

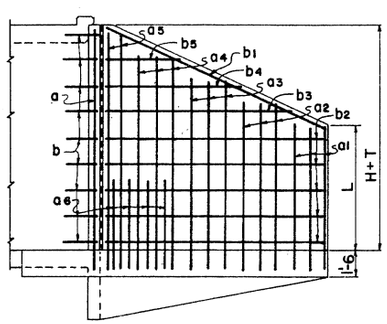


SHORT WING ELEVATION
(Back Face Reinf.)

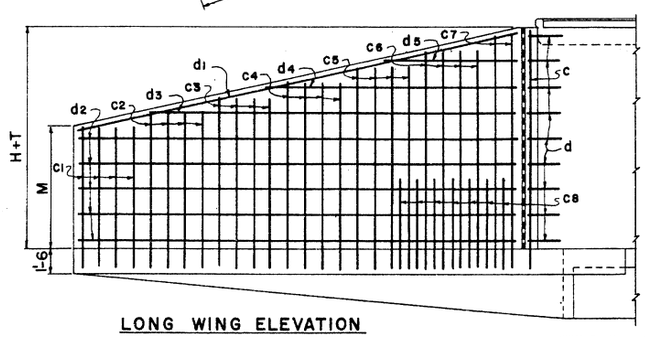


LONG WING ELEVATION
(Back Face Reinf.)

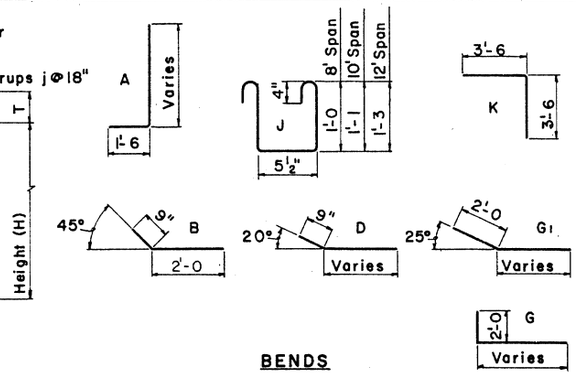


BENDS

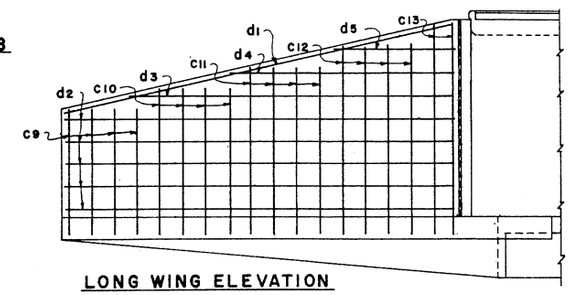


LONG WING ELEVATION
(Front Face Reinf.)

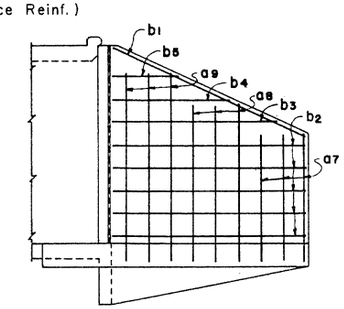


SHORT WING ELEVATION
(Front Face Reinf.)

## INLET WINGS STEEL LIST

| Mark | Bend | 8' Height | | | 9' Height | | | 10' Height | | | 11' Height | | | 12' Height | | |
|---|---|---|---|---|---|---|---|---|---|---|---|---|---|---|---|---|
| | | No | Size | Lgth | No | Size | Lgth | No | Size | Lgth | No | Size | Lgth | No | Size | Lgth |
| SHORT WING | | | | | | | | | | | | | | | | |
| a | A | 1 | #5 | 11'-3 | 1 | #6 | 12'-3 | 1 | #7 | 13'-3 | 1 | #7 | 14'-3 | 1 | #7 | 15'-3 |
| a1 | ✓ | 3 | ✓ | 6'-9 | 3 | #5 | 7'-3 | 3 | #5 | 7'-9 | 3 | #5 | 8'-3 | 3 | #5 | 8'-9 |
| a2 | ✓ | 3 | ✓ | 8'-6 | 3 | ✓ | 8'-9 | 3 | ✓ | 9'-3 | 3 | ✓ | 9'-9 | 3 | #6 | 10'-3 |
| a3 | ✓ | 2 | ✓ | 10'-0 | 3 | #6 | 10'-6 | 3 | #6 | 11'-0 | 3 | #6 | 11'-6 | 3 | #7 | 12'-0 |
| a4 | ✓ | 1 | ✓ | 11'-3 | 1 | ✓ | 12'-3 | 2 | #7 | 12'-9 | 3 | #7 | 13'-3 | 3 | ✓ | 13'-6 |
| a5 | ✓ | | | | | | | | | | | | | 2 | ✓ | 15'-3 |
| a6 | ✓ | | | | | | | | | | 2 | #5 | 6'-3 | 4 | #5 | 6'-9 |
| a7 | str | 3 | #4 | 5'-0 | 3 | #4 | 5'-6 | 3 | #4 | 6'-0 | 3 | #4 | 6'-6 | 3 | #4 | 7'-0 |
| a8 | ✓ | 2 | ✓ | 7'-9 | 3 | ✓ | 8'-3 | 3 | ✓ | 8'-6 | 3 | ✓ | 9'-0 | 3 | ✓ | 9'-6 |
| a9 | ✓ | 1 | ✓ | 9'-6 | 1 | ✓ | 10'-9 | 2 | ✓ | 11'-0 | 2 | ✓ | 11'-6 | 3 | ✓ | 12'-0 |
| b | B | 6 | ✓ | 2'-9 | 7 | ✓ | 2'-9 | 8 | ✓ | 2'-9 | 8 | ✓ | 2'-9 | 9 | ✓ | 2'-9 |
| b1 | str | 2 | #6 | 10'-0 | 2 | #6 | 11'-3 | 2 | #6 | 12'-3 | 2 | #6 | 13'-3 | 2 | #6 | 14'-6 |
| b2 | ✓ | 6 | #4 | 8'-9 | 6 | #4 | 9'-9 | 6 | #4 | 10'-9 | 8 | #4 | 11'-9 | 8 | #4 | 12'-6 |
| b3 | ✓ | 2 | ✓ | 6'-3 | 2 | ✓ | 8'-3 | 2 | ✓ | 9'-9 | 2 | ✓ | 9'-3 | 2 | ✓ | 11'-0 |
| b4 | ✓ | 2 | ✓ | 3'-9 | 2 | ✓ | 5'-6 | 2 | ✓ | 7'-3 | 2 | ✓ | 6'-6 | 2 | ✓ | 8'-3 |
| b5 | ✓ | | | | 2 | ✓ | 2'-9 | 2 | ✓ | 4'-9 | 2 | ✓ | 3'-9 | 2 | ✓ | 5'-6 |
| e | ✓ | 3 | #4 | 2'-6 | 3 | ✓ | 2'-9 | 3 | ✓ | 3'-3 | 4 | ✓ | 3'-6 | 4 | ✓ | 3'-9 |
| e1 | ✓ | 3 | ✓ | 3'-3 | 3 | ✓ | 3'-6 | 3 | ✓ | 3'-9 | 3 | ✓ | 4'-3 | 4 | #5 | 4'-6 |
| e2 | ✓ | 2 | ✓ | 4'-0 | 3 | ✓ | 4'-3 | 3 | #5 | 4'-6 | 3 | #5 | 5'-0 | 3 | #6 | 5'-6 |
| e3 | ✓ | 2 | ✓ | 4'-6 | 2 | #5 | 4'-9 | 3 | #6 | 5'-3 | 3 | #6 | 5'-9 | 3 | #7 | 6'-3 |
| g | G | 1 | ✓ | 11'-9 | 1 | #4 | 12'-9 | 1 | #4 | 13'-6 | 1 | #4 | 14'-6 | 1 | #4 | 15'-6 |
| m | str | 5 | ✓ | 9'-6 | 5 | ✓ | 10'-6 | 6 | ✓ | 11'-6 | 6 | ✓ | 12'-6 | 6 | ✓ | 13'-6 |
| LONG WING | | | | | | | | | | | | | | | | |
| c | A | 1 | #6 | 11'-3 | 1 | #7 | 12'-3 | 1 | #7 | 13'-3 | 1 | #7 | 14'-3 | 1 | #7 | 15'-3 |
| c1 | ✓ | 4 | #5 | 7'-3 | 4 | #5 | 8'-0 | 4 | #5 | 8'-6 | 4 | #5 | 9'-3 | 4 | #5 | 9'-9 |
| c2 | ✓ | 4 | ✓ | 8'-3 | 4 | ✓ | 9'-0 | 4 | ✓ | 9'-6 | 4 | ✓ | 10'-0 | 4 | #6 | 10'-9 |
| c3 | ✓ | 4 | ✓ | 9'-3 | 4 | ✓ | 9'-9 | 4 | #6 | 10'-6 | 4 | #6 | 11'-0 | 4 | #7 | 11'-6 |
| c4 | ✓ | 4 | ✓ | 10'-0 | 4 | #6 | 10'-9 | 4 | #7 | 11'-3 | 4 | #7 | 11'-9 | 4 | ✓ | 12'-6 |
| c5 | ✓ | 2 | #6 | 11'-0 | 4 | #7 | 11'-9 | 4 | ✓ | 12'-3 | 4 | ✓ | 12'-9 | 4 | ✓ | 13'-3 |
| c6 | ✓ | | | | | | | 2 | ✓ | 13'-0 | 4 | ✓ | 13'-6 | 4 | ✓ | 14'-3 |
| c7 | ✓ | | | | | | | | | | | | | 2 | ✓ | 15'-0 |
| c8 | ✓ | | | | | | | 2 | #5 | 6'-3 | 7 | #5 | 6'-9 | 12 | ✓ | 6'-9 |
| c9 | str | 4 | #4 | 5'-9 | 4 | #4 | 6'-6 | 4 | #4 | 7'-0 | 4 | #4 | 7'-9 | 4 | #4 | 8'-3 |
| c10 | ✓ | 4 | ✓ | 7'-3 | 4 | ✓ | 7'-9 | 4 | ✓ | 8'-6 | 4 | ✓ | 9'-0 | 4 | ✓ | 9'-6 |
| c11 | ✓ | 4 | ✓ | 8'-6 | 4 | ✓ | 9'-3 | 4 | ✓ | 9'-9 | 4 | ✓ | 10'-3 | 4 | ✓ | 11'-0 |
| c12 | ✓ | | | | 2 | ✓ | 10'-6 | 3 | ✓ | 11'-0 | 4 | ✓ | 11'-9 | 4 | ✓ | 12'-3 |
| c13 | ✓ | | | | | | | | | | | | | 2 | ✓ | 13'-6 |
| d | D | 6 | #4 | 2'-9 | 7 | #4 | 2'-9 | 7 | #4 | 2'-9 | 8 | #4 | 2'-9 | 9 | ✓ | 2'-9 |
| d1 | str | 2 | #6 | 18'-3 | 2 | #6 | 20'-3 | 2 | #6 | 22'-3 | 2 | #6 | 24'-3 | 2 | #6 | 26'-3 |
| d2 | ✓ | 6 | #4 | 17'-9 | 8 | #4 | 19'-9 | 8 | #4 | 21'-9 | 8 | #4 | 23'-9 | 10 | #4 | 25'-6 |
| d3 | ✓ | 2 | ✓ | 15'-3 | 2 | ✓ | 13'-6 | 2 | ✓ | 18'-0 | 2 | ✓ | 22'-6 | 2 | ✓ | 20'-6 |
| d4 | ✓ | 2 | ✓ | 8'-9 | 2 | ✓ | 6'-9 | 2 | ✓ | 11'-3 | 2 | ✓ | 15'-9 | 2 | ✓ | 13'-6 |
| d5 | ✓ | | | | | | | 2 | ✓ | 4'-6 | 2 | ✓ | 9'-0 | 2 | ✓ | 6'-9 |
| f | ✓ | 5 | #4 | 2'-6 | 6 | #4 | 2'-9 | 6 | ✓ | 3'-3 | 7 | ✓ | 3'-6 | 7 | ✓ | 3'-9 |
| f1 | ✓ | 5 | ✓ | 3'-0 | 5 | ✓ | 3'-6 | 6 | ✓ | 3'-9 | 6 | ✓ | 4'-3 | 7 | #5 | 4'-6 |
| f2 | ✓ | 5 | ✓ | 3'-6 | 5 | ✓ | 4'-0 | 6 | #5 | 4'-6 | 6 | #5 | 4'-9 | 7 | #6 | 5'-3 |
| f3 | ✓ | 4 | ✓ | 4'-3 | 5 | #5 | 4'-6 | 5 | #6 | 5'-0 | 6 | #6 | 5'-6 | 6 | #7 | 6'-0 |
| g1 | G1 | 1 | ✓ | 23'-3 | 1 | #4 | 25'-6 | 1 | #4 | 27'-6 | 1 | #4 | 29'-9 | 1 | #4 | 32'-0 |
| n | str | 5 | ✓ | 18'-6 | 5 | ✓ | 20'-6 | 6 | ✓ | 22'-6 | 6 | ✓ | 25'-0 | 6 | ✓ | 27'-0 |

NOTE:

See B-01.10 for general notes and miscellaneous details.
See B-07.10 for concrete and steel headwall quantities.

## DIMENSIONS

| Height of Opening | A | B | C | D | E | F | G | J | K | L | M |
|---|---|---|---|---|---|---|---|---|---|---|---|
| 8' | 2'-0 | 1'-0 | 2'-0 | 5'-0 | 10'-0 | 3'-11 | 3'-1½ | 3'-6 | 19'-0 | 3'-10 | 4'-9 |
| 9' | 2'-1 | 1'-3 | 2'-2 | 5'-6 | 11'-0 | 4'-6 | 3'-3⅞ | 4'-1 | 21'-0 | 4'-4 | 5'-5 |
| 10' | 2'-2 | 1'-6 | 2'-4 | 6'-0 | 12'-0 | 5'-1 | 3'-6¼ | 4'-7 | 23'-0 | 4'-10 | 6'-0 |
| 11' | 2'-3 | 1'-9 | 2'-6 | 6'-6 | 13'-0 | 5'-8 | 3'-8⅝ | 5'-1 | 25'-0 | 5'-4 | 6'-7 |
| 12' | 2'-4 | 2'-0 | 2'-8 | 7'-0 | 14'-0 | 6'-3 | 3'-11 | 5'-8 | 27'-0 | 5'-10 | 7'-2 |

## CURB & CUT-OFF WALL STEEL LIST

| Mark | Bend | 8' Spans | | | | | 10' Spans | | | | | 12' Spans | | | | |
|---|---|---|---|---|---|---|---|---|---|---|---|---|---|---|---|---|
| | | 1 Barrel | | | ○ | ◇ | 1 Barrel | | | ○ | ◇ | 1 Barrel | | | ○ | ◇ |
| | | No | Size | Lgth | No | Lgth | No | Size | Lgth | No | Lgth | No | Size | Lgth | No | Lgth |
| h | str | 4 | #6 | 13'-0 | | 12'-4 | 4 | #7 | 16'-3 | | 15'-4 | 4 | #9 | 19'-3 | | 18'-5 |
| j | J | 9 | #4 | 3'-6 | 8 | | 11 | #4 | 3'-9 | 10 | | 13 | #4 | 4'-3 | 12 | |
| k | K | 7 | ✓ | 7'-0 | 8 | | 8 | ✓ | 7'-0 | 10 | | 10 | ✓ | 7'-0 | 12 | |
| k1 | str | 2 | ✓ | 8'-3 | | 12'-4 | 2 | ✓ | 10'-9 | | 15'-4 | 2 | ✓ | 13'-6 | | 18'-5 |

○ Additional number of bars per each extra barrel.
◇ Additional length of bars per each extra barrel.

| NO. | DESCRIPTION OF REVISIONS | MADE BY | DATE |
|---|---|---|---|
| ① | Stirrups - 12' Span | SEA | 10-74 |
| ② | Wing thickness & curb height | JTW | 7-76 |
| ③ | | | |

| | | |
|---|---|---|
| DESIGN | GBW, DHY | 8-72 |
| DRAWN | RWM, APJ | 8-72 |
| CHECKED | NAB | 3-73 |

DESIGN APPROVED: K.C. Beckler
APPROVED FOR DISTRIBUTION: [signature]

ARIZONA
DEPARTMENT OF TRANSPORTATION
HIGHWAYS DIVISION
STANDARD PLANS

INLET OR OUTLET WINGS
45° SKEW CULVERT
2:1 SLOPE, HEIGHT 8' TO 12'

REVISION

STANDARD NO. CW2-8
PLAN NO. B-04.80

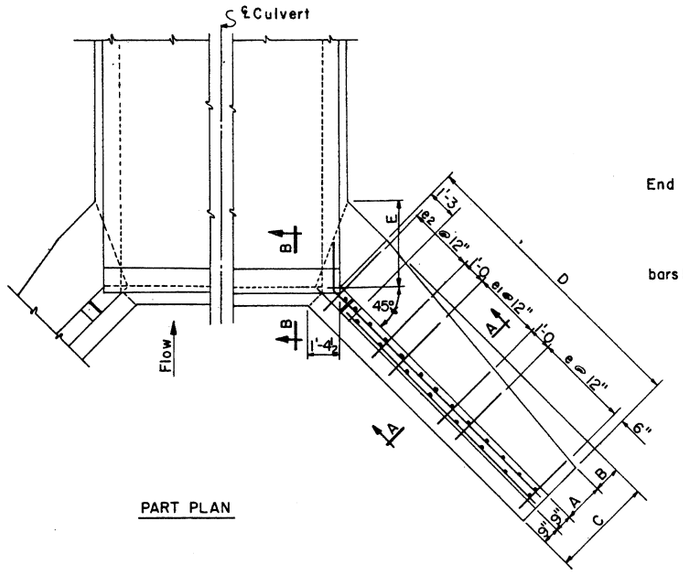


PART PLAN

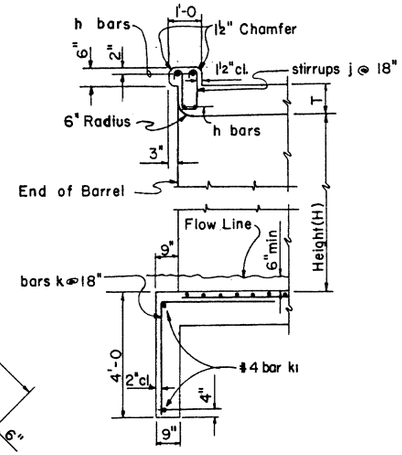


SECTION B-B

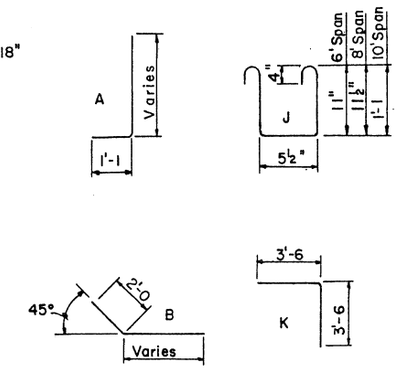


BENDS

INLET WINGS STEEL LIST

| Mark | Bend | 3' Height | | | 4' Height | | | 5' Height | | | 6' Height | | | 7' Height | | |
|---|---|---|---|---|---|---|---|---|---|---|---|---|---|---|---|---|
| | | No | Size | Lgth | No | Size | Lgth | No | Size | Lgth | No | Size | Lgth | No | Size | Lgth |
| a | A | 6 | #5 | 4'-6 | 8 | #5 | 5'-6 | 8 | #5 | 6'-3 | 8 | #5 | 7'-0 | 8 | #5 | 7'-9 |
| a1 | ✓ | 6 | ✓ | 5'-3 | 6 | ✓ | 6'-3 | 8 | ✓ | 7'-0 | 8 | ✓ | 7'-9 | 8 | ✓ | 8'-6 |
| a2 | ✓ | 4 | ✓ | 5'-9 | 4 | ✓ | 6'-9 | 4 | ✓ | 7'-6 | 4 | ✓ | 8'-3 | 6 | ✓ | 9'-3 |
| a3 | ✓ | | | | | | | | | | 4 | ✓ | 8'-6 | 4 | ✓ | 9'-9 |
| a4 | str | 4 | #4 | 3'-6 | 6 | #4 | 4'-6 | 6 | #4 | 5'-3 | 6 | #4 | 6'-0 | 6 | #4 | 6'-9 |
| a5 | ✓ | 6 | ✓ | 4'-0 | 6 | ✓ | 5'-3 | 6 | ✓ | 6'-0 | 6 | ✓ | 6'-9 | 6 | ✓ | 7'-6 |
| a6 | ✓ | | | | | | | | | | 4 | ✓ | 7'-6 | 4 | ✓ | 8'-3 |
| b | B | 6 | #4 | 2'-9 | 8 | #4 | 2'-9 | 10 | #4 | 2'-9 | 10 | ✓ | 2'-9 | 12 | ✓ | 2'-9 |
| b1 | str | 4 | #6 | 6'-6 | 4 | #6 | 7'-6 | 4 | #6 | 8'-6 | 4 | #6 | 10'-0 | 4 | #6 | 11'-6 |
| b2 | ✓ | 8 | #4 | 6'-6 | 12 | #4 | 7'-6 | 12 | #4 | 8'-3 | 16 | #4 | 10'-0 | 16 | #4 | 11'-6 |
| b3 | ✓ | | | | | | | 4 | ✓ | 5'-0 | | | | 4 | ✓ | 8'-3 |
| e | ✓ | 16 | #4 | 1'-9 | 12 | #4 | 2'-0 | 10 | ✓ | 2'-3 | 8 | #4 | 2'-6 | 10 | ✓ | 2'-9 |
| e1 | ✓ | | | | 6 | ✓ | 2'-3 | 10 | ✓ | 2'-6 | 8 | ✓ | 2'-9 | 8 | ✓ | 3'-3 |
| e2 | ✓ | | | | | | | | | | 6 | ✓ | 3'-0 | 8 | ✓ | 3'-6 |
| g | B | 2 | #4 | 9'-9 | 2 | #4 | 10'-6 | 2 | #4 | 11'-6 | 2 | ✓ | 13'-0 | 2 | ✓ | 14'-6 |
| m | str | 8 | ✓ | 7'-0 | 8 | ✓ | 8'-0 | 10 | ✓ | 9'-0 | 10 | ✓ | 10'-6 | 10 | ✓ | 12'-0 |

CURB & CUT-OFF WALL STEEL LIST

| Mark | Bend | Size | 6' Spans | | | | 8' Spans | | | | 10' Spans | | | |
|---|---|---|---|---|---|---|---|---|---|---|---|---|---|---|
| | | | 1 Barrel | | ○ | ◇ | 1 Barrel | | ○ | ◇ | 1 Barrel | | ○ | ◇ |
| | | | No | Lgth | No | Lgth | No | Lgth | No | Lgth | No | Lgth | No | Lgth |
| h | str | #6 | 4 | 7'-0 | | 6'-8 | 4 | 9'-3 | | 8'-9 | 4 | 11'-3 | | 10'-10 |
| j | J | #4 | 5 | 3'-6 | 4 | | 6 | 3'-6 | 6 | | 8 | 3'-9 | 7 | |
| k | K | ✓ | 4 | 7'-0 | 4 | | 5 | 7'-0 | 6 | | 6 | 7'-0 | 7 | |
| k1 | str | ✓ | 2 | 4'-9 | | 6'-8 | 2 | 6'-9 | | 8'-9 | 2 | 8'-9 | | 10'-10 |

○ Additional number of bars per each extra barrel.
◇ Additional length of bars per each extra barrel.

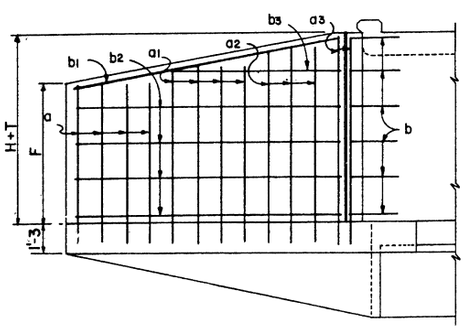


WING ELEVATION
(Back Face Reinf.)

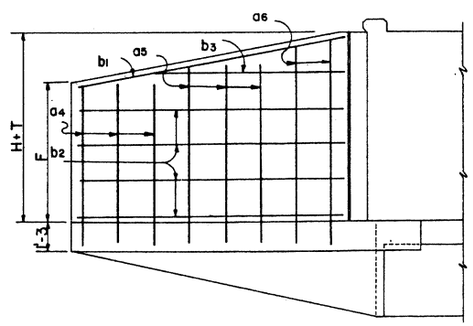


WING ELEVATION
(Front Face Reinf.)

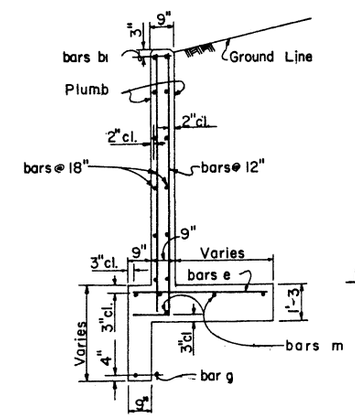


SECTION A-A

DIMENSIONS

| Height of Opening | A | B | C | D | E | F |
|---|---|---|---|---|---|---|
| 3' | 9" | 0 | 2'-3 | 7'-6 | 9" | 2'-7 |
| 4' | 11" | 4" | 2'-9 | 8'-6 | 1'-5 | 3'-6 |
| 5' | 1'-3 | 6" | 3'-3 | 9'-6 | 2'-2 | 4'-5 |
| 6' | 1'-6 | 9" | 3'-9 | 11'-0 | 2'-10 | 5'-2 |
| 7' | 1'-10 | 11" | 4'-3 | 12'-6 | 3'-7 | 5'-11 |

NOTE:
See B-01.10 for general notes and miscellaneous details
See B-07.10 for concrete and steel headwall quantities.

| DESIGN | DRAWN | CHECKED | DATE | NO. | DESCRIPTION OF REVISIONS | MADE BY | DATE |
|---|---|---|---|---|---|---|---|
| DHY | CAB | NAB | 8-72 | 1 | Curb height now 8" | J.T.W. | 7-76 |
| | | | 8-72 | 2 | | | |
| | | | 3-73 | 3 | | | |

DESIGN APPROVED R.C. Brechler
APPROVED FOR DISTRIBUTION

ARIZONA
DEPARTMENT OF TRANSPORTATION
HIGHWAYS DIVISION
STANDARD PLANS

INLET WINGS
RIGHT ANGLE CULVERT
6:1 SLOPE, HEIGHT 3' TO 7'

REVISION

STANDARD NO. CW6-1
PLAN NO. B-05.10

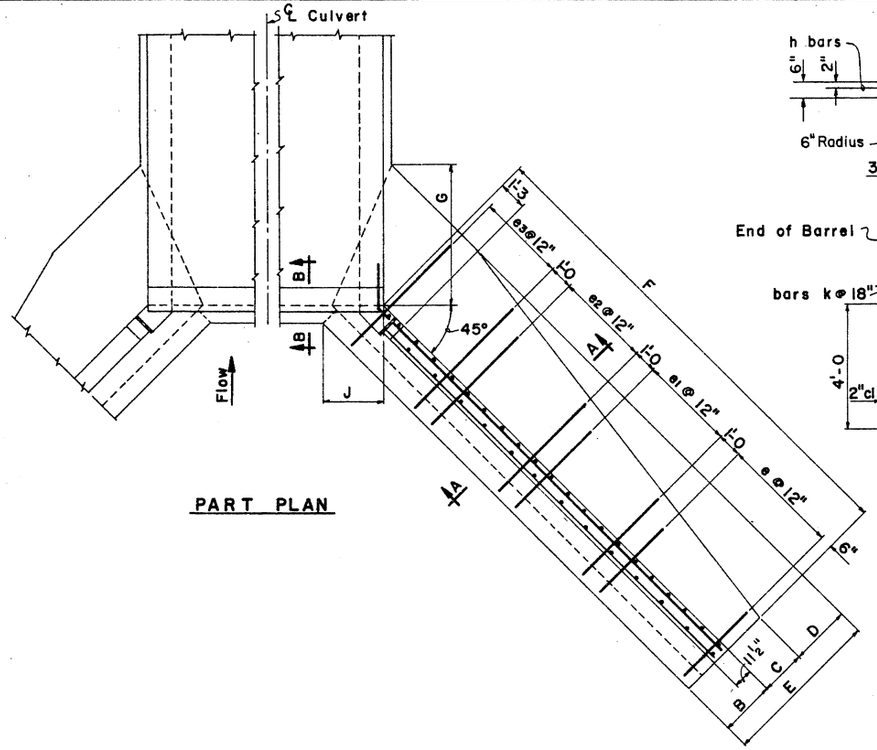


PART PLAN

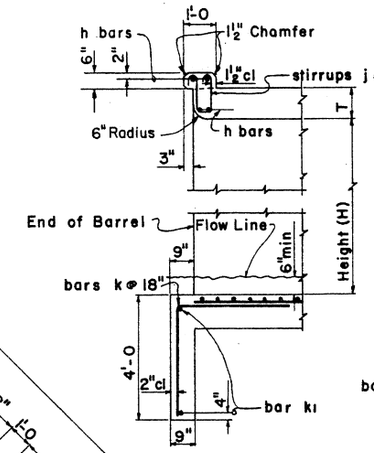


SECTION B-B

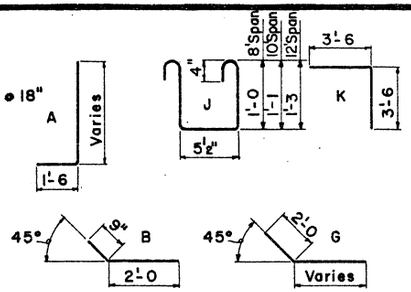


BENDS

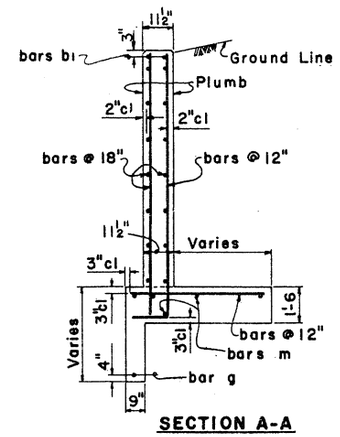


SECTION A-A

## INLET WINGS STEEL LIST

| Mark | Bend | 8' Height | | | 9' Height | | | 10' Height | | | 11' Height | | | 12' Height | | |
|---|---|---|---|---|---|---|---|---|---|---|---|---|---|---|---|---|
| | | No | Size | Lgth | No | Size | Lgth | No | Size | Lgth | No | Size | Lgth | No | Size | Lgth |
| a | A | 2 | #5 | 11'-3 | 2 | #6 | 12'-3 | 2 | #7 | 13'-3 | 2 | #7 | 14'-3 | 2 | #7 | 15'-3 |
| a1 | ✓ | 8 | ✓ | 9'-3 | 8 | #5 | 9'-9 | 8 | #5 | 10'-3 | 8 | #6 | 10'-9 | 8 | #6 | 11'-0 |
| a2 | ✓ | 8 | ✓ | 10'-0 | 8 | ✓ | 10'-6 | 8 | #6 | 11'-0 | 8 | ✓ | 11'-6 | 8 | ✓ | 12'-0 |
| a3 | ✓ | 8 | ✓ | 10'-6 | 8 | #6 | 11'-3 | 8 | ✓ | 11'-9 | 8 | #7 | 12'-6 | 8 | #7 | 13'-0 |
| a4 | ✓ | 2 | ✓ | 11'-3 | 6 | ✓ | 12'-0 | 8 | #7 | 12'-6 | 8 | ✓ | 13'-3 | 8 | ✓ | 13'-9 |
| a5 | ✓ | | | | | | | 2 | ✓ | 13'-3 | 4 | ✓ | 14'-0 | 8 | ✓ | 14'-9 |
| a6 | ✓ | | | | | | | | | | 8 | #5 | 6'-3 | 14 | #5 | 6'-9 |
| a7 | str | 8 | #4 | 7'-9 | 8 | #4 | 8'-3 | 8 | #4 | 8'-9 | 8 | #4 | 9'-3 | 8 | #4 | 9'-6 |
| a8 | ✓ | 8 | ✓ | 8'-9 | 8 | ✓ | 9'-3 | 8 | ✓ | 9'-9 | 8 | ✓ | 10'-6 | 8 | ✓ | 10'-9 |
| a9 | ✓ | 2 | ✓ | 9'-9 | 4 | ✓ | 10'-6 | 6 | ✓ | 11'-0 | 8 | ✓ | 11'-9 | 8 | ✓ | 12'-3 |
| a10 | ✓ | | | | | | | | | | | | | 2 | ✓ | 13'-9 |
| b | B | 12 | #4 | 2'-9 | 14 | #4 | 2'-9 | 14 | #4 | 2'-9 | 16 | #4 | 2'-9 | 18 | ✓ | 2'-9 |
| b1 | str | 4 | #6 | 13'-0 | 4 | #6 | 15'-0 | 4 | #6 | 16'-6 | 4 | #6 | 18'-3 | 4 | #6 | 19'-9 |
| b2 | ✓ | 16 | #4 | 12'-9 | 20 | #4 | 14'-9 | 20 | #4 | 16'-3 | 20 | #4 | 17'-9 | 24 | #4 | 19'-3 |
| b3 | ✓ | 4 | ✓ | 11'-3 | 4 | ✓ | 7'-9 | 4 | ✓ | 12'-3 | 4 | ✓ | 16'-3 | 4 | ✓ | 12'-9 |
| b4 | ✓ | | | | | | | 4 | ✓ | 4'-9 | 4 | ✓ | 9'-3 | 4 | ✓ | 6'-3 |
| e | ✓ | 8 | #4 | 3'-3 | 8 | #4 | 3'-6 | 10 | ✓ | 3'-9 | 10 | ✓ | 4'-0 | 12 | ✓ | 4'-3 |
| e1 | ✓ | 8 | ✓ | 3'-6 | 8 | ✓ | 3'-9 | 10 | ✓ | 4'-3 | 10 | #5 | 4'-6 | 10 | #5 | 5'-0 |
| e2 | ✓ | 8 | ✓ | 3'-9 | 8 | ✓ | 4'-3 | 8 | #5 | 4'-9 | 10 | #6 | 5'-0 | 10 | #6 | 5'-6 |
| e3 | ✓ | 4 | ✓ | 4'-3 | 8 | #5 | 4'-6 | 8 | #6 | 5'-0 | 8 | ✓ | 5'-6 | 10 | #7 | 6'-0 |
| g | G | 2 | ✓ | 16'-0 | 2 | #4 | 18'-0 | 2 | #4 | 19'-6 | 2 | #4 | 21'-0 | 2 | #4 | 22'-6 |
| m | str | 10 | ✓ | 13'-6 | 10 | ✓ | 15'-6 | 10 | ✓ | 17'-0 | 12 | ✓ | 18'-6 | 12 | ✓ | 20'-0 |

## CURB & CUT-OFF WALL STEEL LIST

| Mark | Bend | Size | 8'Spans | | | | 10' Spans | | | | 12 Spans | | | |
|---|---|---|---|---|---|---|---|---|---|---|---|---|---|---|
| | | | 1 Barrel | | ○ | ◇ | 1 Barrel | | ○ | ◇ | 1 Barrel | | ○ | ◇ |
| | | | No | Lgth | No | Lgth | No | Lgth | No | Lgth | No | Lgth | No | Lgth |
| h | str | #6 | 4 | 9'-3 | | 8'-9 | 4 | 11'-3 | | 10'-10 | 4 | 13'-6 | | 13'-0 |
| j | J | #4 | 6 | 3'-6 | 6 | | 8 | 3'-9 | 7 | | 9 | 4'-3 | 8 | |
| k | K | ✓ | 5 | 7'-0 | 6 | | 5 | 7'-0 | 7 | | 7 | 7'-0 | 8 | |
| k1 | str | ✓ | 2 | 5'-3 | | 8'-9 | 2 | 7'-0 | | 10'-10 | 2 | 9'-0 | | 13'-0 |

○ Additional number of bars per each extra barrel.
◇ Additional length of bars per each extra barrel.

## DIMENSIONS

| Height of Opening | B | C | D | E | F | G | J | K |
|---|---|---|---|---|---|---|---|---|
| 8' | 2'-0 | 1'-9 | 1'-0 | 4'-9 | 14'-0 | 3'-7 | 2'-1 | 6'-7 |
| 9' | 2'-1 | 1'-11 | 1'-3 | 5'-3 | 16'-0 | 4'-2 | 2'-2⅜ | 7'-1 |
| 10' | 2'-2 | 2'-1 | 1'-6 | 5'-9 | 17'-6 | 4'-9 | 2'-3¾ | 7'-7 |
| 11' | 2'-3 | 2'-3 | 1'-9 | 6'-3 | 19'-0 | 5'-4 | 2'-5⅛ | 8'-1 |
| 12' | 2'-4 | 2'-5 | 2'-0 | 6'-9 | 20'-6 | 5'-11 | 2'-6⅝ | 8'-4 |

NOTE:
See B-01.10 for general notes and miscellaneous details.
See B-07.10 for concrete and steel headwall quantities.

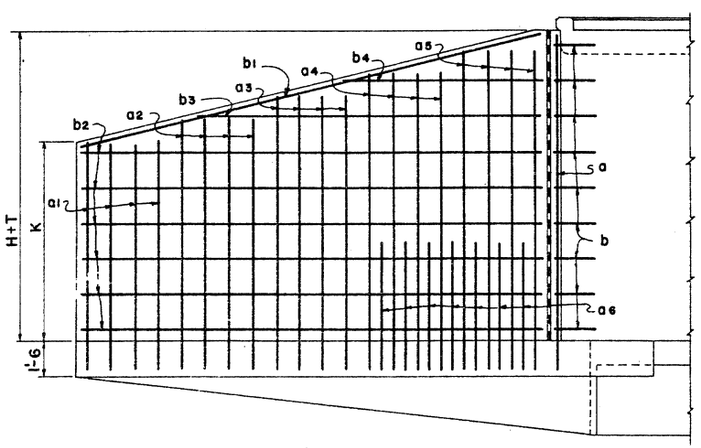


WING ELEVATION
(Back Face Reinf.)

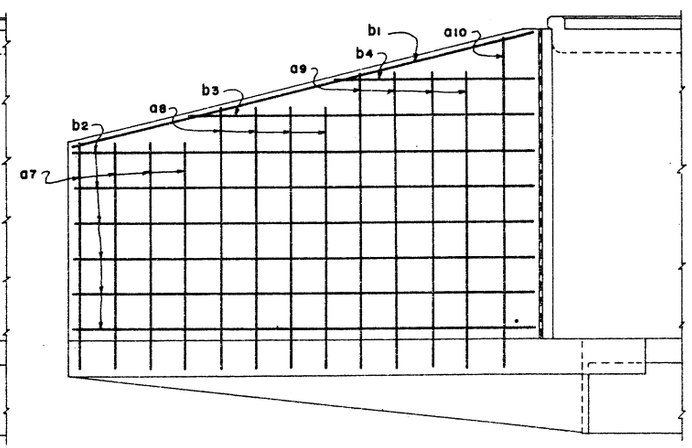


WING ELEVATION
(Front Face Reinf.)

| DESIGN | GBW, DHY | 8-72 |
|---|---|---|
| DRAWN | RWM, APJ | 8-72 |
| CHECKED | WT, NAB | 3-73 |

| NO. | DESCRIPTION OF REVISIONS | MADE BY | DATE |
|---|---|---|---|
| 1 | Stirrups - 12' Span | SEA | 10-74 |
| 2 | Wing thickness & curb height | JTW | 7-76 |
| 3 | | | |

DESIGN APPROVED
R. C. Brechler

APPROVED, FOR DISTRIBUTION

ARIZONA
DEPARTMENT OF TRANSPORTATION
HIGHWAYS DIVISION
STANDARD PLANS

INLET WINGS
RIGHT ANGLE CULVERT
6:1 SLOPE, HEIGHT 8' TO 12'

REVISION

STANDARD NO. CW6-2

PLAN NO. B-05.20

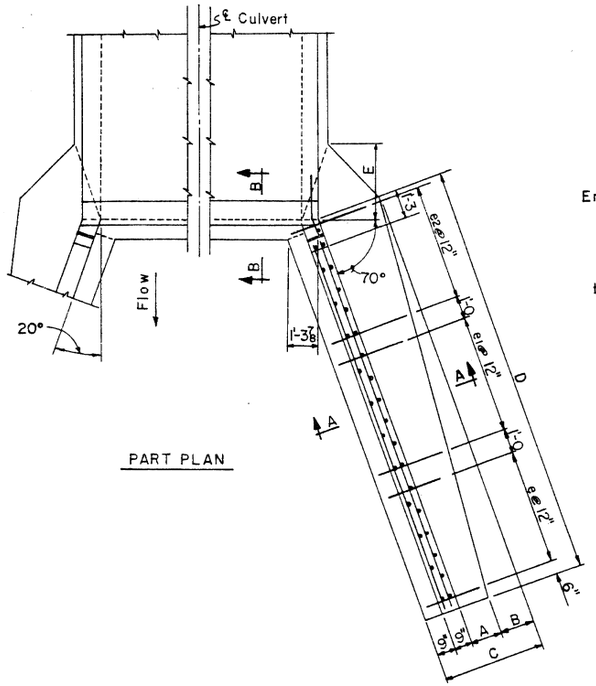


PART PLAN

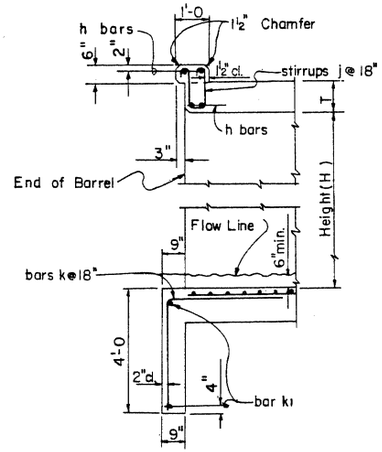


SECTION B-B

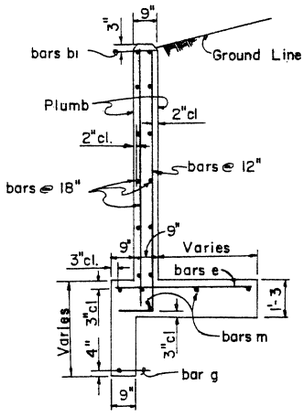


SECTION A-A

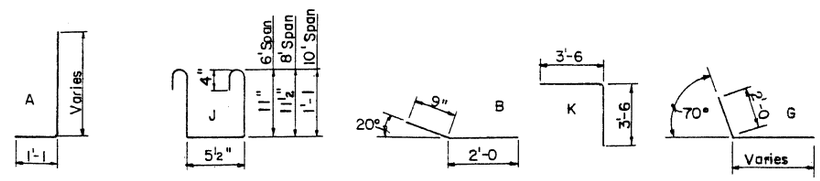


BENDS

OUTLET WINGS STEEL LIST

| Mark | Bend | 3' Height | | | 4' Height | | | 5' Height | | | 6' Height | | | 7' Height | | |
|---|---|---|---|---|---|---|---|---|---|---|---|---|---|---|---|---|
| | | No | Size | Lgth | No | Size | Lgth | No | Size | Lgth | No | Size | Lgth | No | Size | Lgth |
| a | A | 8 | #5 | 4'-3 | 8 | #5 | 4'-9 | 8 | #5 | 5'-6 | 8 | #5 | 6'-0 | 8 | #5 | 6'-6 |
| a1 | ✓ | 6 | ✓ | 5'-0 | 6 | ✓ | 5'-9 | 8 | ✓ | 6'-3 | 8 | ✓ | 6'-9 | 8 | ✓ | 7'-3 |
| a2 | ✓ | 4 | ✓ | 5'-9 | 4 | ✓ | 6'-3 | 8 | ✓ | 7'-0 | 8 | ✓ | 7'-6 | 8 | ✓ | 8'-0 |
| a3 | ✓ | | | | 4 | ✓ | 6'-9 | 4 | ✓ | 7'-9 | 4 | ✓ | 8'-3 | 8 | ✓ | 8'-9 |
| a4 | ✓ | | | | | | | | | | 4 | ✓ | 8'-9 | 4 | ✓ | 9'-6 |
| a5 | str | 6 | #4 | 3'-3 | 6 | #4 | 3'-9 | 6 | #4 | 4'-6 | 6 | #4 | 5'-0 | 6 | #4 | 5'-3 |
| a6 | ✓ | 6 | ✓ | 4'-3 | 6 | ✓ | 4'-9 | 6 | ✓ | 5'-3 | 6 | ✓ | 5'-9 | 6 | ✓ | 6'-3 |
| a7 | ✓ | | | | 2 | ✓ | 5'-6 | 6 | ✓ | 6'-3 | 6 | ✓ | 6'-9 | 6 | ✓ | 7'-3 |
| a8 | ✓ | | | | | | | | | | 2 | ✓ | 7'-6 | 6 | ✓ | 8'-0 |
| b | B | 6 | #4 | 2'-9 | 8 | #4 | 2'-9 | 10 | #4 | 2'-9 | 10 | ✓ | 2'-9 | 12 | ✓ | 2'-9 |
| b1 | str | 4 | #6 | 7'-3 | 4 | #6 | 9'-6 | 4 | #6 | 12'-6 | 4 | #6 | 14'-6 | 4 | #6 | 16'-9 |
| b2 | ✓ | 8 | #4 | 7'-0 | 8 | #4 | 9'-3 | 12 | #4 | 12'-3 | 12 | #4 | 14'-3 | 12 | #4 | 16'-6 |
| b3 | ✓ | | | | 4 | ✓ | 6'-9 | 4 | ✓ | 5'-9 | 4 | ✓ | 9'-3 | 4 | ✓ | 13'-9 |
| b4 | ✓ | | | | | | | | | | | | | 4 | ✓ | 6'-9 |
| e | ✓ | 16 | #4 | 1'-9 | 12 | #4 | 1'-9 | 10 | #4 | 2'-0 | 12 | #4 | 2'-3 | 12 | ✓ | 2'-3 |
| e1 | ✓ | | | | 10 | ✓ | 2'-0 | 10 | ✓ | 2'-3 | 12 | ✓ | 2'-6 | 12 | ✓ | 2'-9 |
| e2 | ✓ | | | | | | | 8 | ✓ | 2'-6 | 8 | ✓ | 3'-0 | 12 | ✓ | 3'-3 |
| g | G | 2 | #4 | 10'-0 | 2 | #4 | 12'-6 | 2 | ✓ | 15'-6 | 2 | ✓ | 17'-3 | 2 | ✓ | 19'-3 |
| m | str | 8 | ✓ | 7'-6 | 8 | ✓ | 10'-0 | 10 | ✓ | 13'-0 | 10 | ✓ | 15'-0 | 10 | ✓ | 17'-0 |

CURB & CUT-OFF WALL STEEL LIST

| Mark | Bend | Size | 6' Spans | | | | 8' Spans | | | | 10' Spans | | | |
|---|---|---|---|---|---|---|---|---|---|---|---|---|---|---|
| | | | 1 Barrel | | ○ | ◇ | 1 Barrel | | ○ | ◇ | 1 Barrel | | ○ | ◇ |
| | | | No | Lgth | No | Lgth | No | Lgth | No | Lgth | No | Lgth | No | Lgth |
| h | str | #6 | 4 | 7'-0 | | 6'-8 | 4 | 9'-3 | | 8'-9 | 4 | 11'-3 | | 10'-10 |
| j | J | #4 | 5 | 3'-6 | 4 | | 6 | 3'-6 | 6 | | 8 | 3'-9 | 7 | |
| k | K | ✓ | 4 | 7'-0 | 4 | | 5 | 7'-0 | 5 | | 6 | 7'-0 | 7 | |
| k1 | str | ✓ | 2 | 4'-9 | | 6'-8 | 2 | 6'-9 | | 8'-9 | 2 | 8'-9 | | 10'-10 |

○ Additional number of bars per each extra barrel.
◇ Additional length of bars per each extra barrel.

DIMENSIONS

| Height of Opening | A | B | C | D | E | F |
|---|---|---|---|---|---|---|
| 3' | 9" | 0 | 2'-3 | 8'-0 | 8" | 2'-3 |
| 4' | 11" | 4" | 2'-9 | 10'-6 | 1'-3 | 2'-10 |
| 5' | 1'-1 | 8" | 3'-3 | 13'-6 | 1'-11 | 3'-7 |
| 6' | 1'-2 | 1'-1 | 3'-9 | 15'-6 | 2'-7 | 4'-1 |
| 7' | 1'-3 | 1'-6 | 4'-3 | 17'-6 | 3'-2 | 4'-5 |

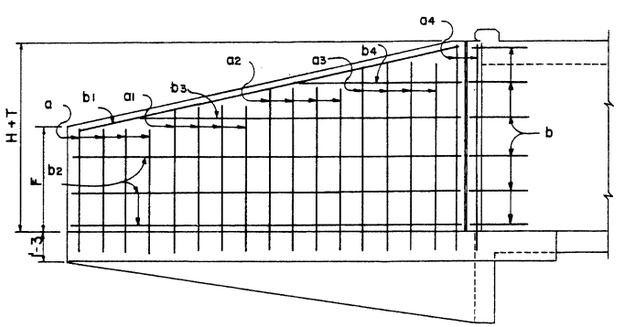


WING ELEVATION
(Back Face Reinf.)

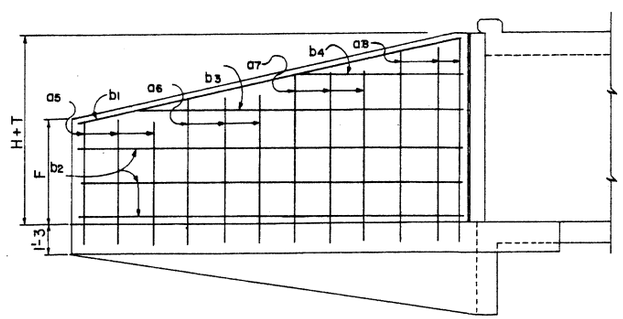


WING ELEVATION
(Front Face Reinf.)

NOTE:
See B-01.10 for general notes and miscellaneous details.
See B-07.10 for concrete and steel headwall quantities.

| DESIGN | DRY | 8-72 | NO. | DESCRIPTION OF REVISIONS | MADE BY | DATE |
|---|---|---|---|---|---|---|
| DRAWN | CMG | 8-72 | 1 | Wing Lengths = D | SEA | 10-74 |
| CHECKED | NAB | 3-73 | 2 | Curb height now 6" | JTW | 7-76 |

DESIGN APPROVED
R.C. Beckler

APPROVED FOR DISTRIBUTION

ARIZONA
DEPARTMENT OF TRANSPORTATION
HIGHWAYS DIVISION
STANDARD PLANS

OUTLET WINGS
RIGHT ANGLE CULVERT
6:1 SLOPE, HEIGHT 3' TO 7'

REVISION

STANDARD NO. CW6-3

PLAN NO. B-05.30

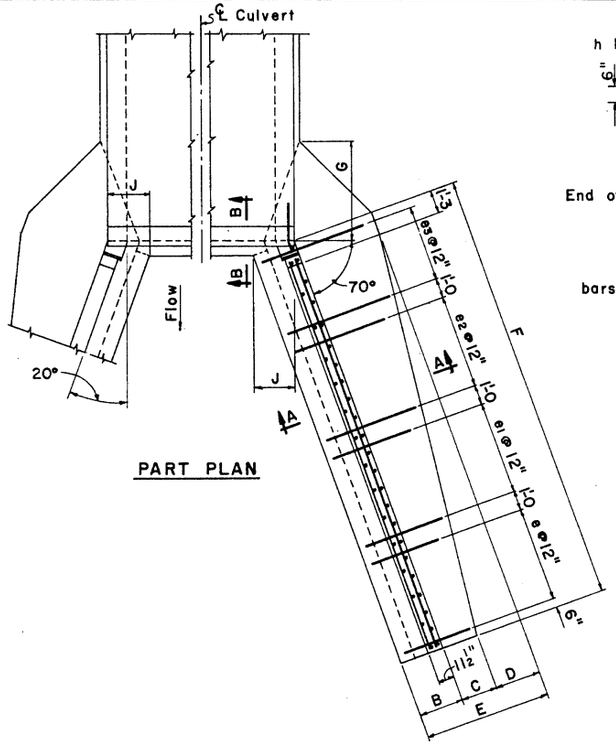


PART PLAN

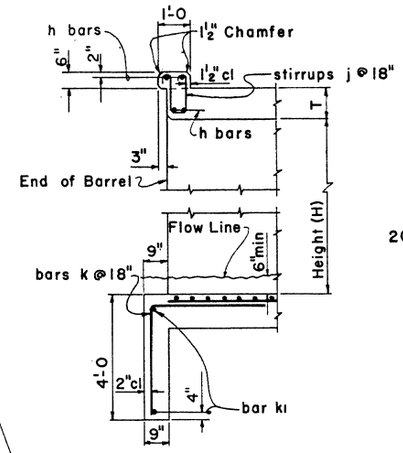


SECTION B-B

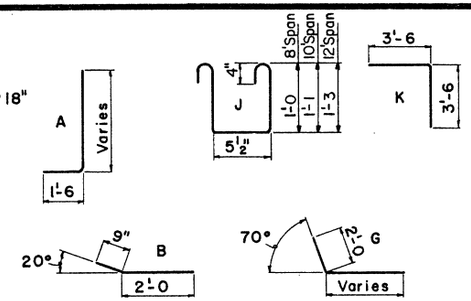


BENDS

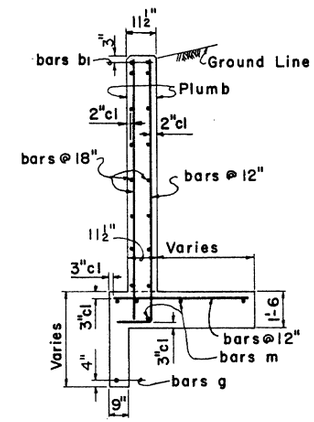


SECTION A-A

## OUTLET WINGS STEEL LIST

| Mark | Bend | 8' Height | | | 9' Height | | | 10' Height | | | 11' Height | | | 12' Height | | |
|---|---|---|---|---|---|---|---|---|---|---|---|---|---|---|---|---|
| | | No | Size | Lgth | No | Size | Lgth | No | Size | Lgth | No | Size | Lgth | No | Size | Lgth |
| a | A | 2 | #5 | 11'-3 | 2 | #6 | 12'-3 | 2 | #7 | 13'-3 | 2 | #7 | 14'-3 | 2 | #7 | 15'-3 |
| a1 | ✓ | 8 | ✓ | 7'-6 | 8 | #5 | 7'-9 | 8 | #5 | 8'-0 | 8 | #5 | 8'-3 | 8 | #5 | 8'-6 |
| a2 | ✓ | 8 | ✓ | 8'-3 | 8 | ✓ | 8'-9 | 8 | ✓ | 9'-0 | 8 | ✓ | 9'-6 | 8 | ✓ | 9'-9 |
| a3 | ✓ | 8 | ✓ | 9'-3 | 8 | ✓ | 9'-9 | 8 | ✓ | 10'-3 | 8 | ✓ | 10'-6 | 8 | #6 | 11'-0 |
| a4 | ✓ | 8 | ✓ | 10'-3 | 8 | #6 | 10'-9 | 8 | #6 | 11'-3 | 8 | #6 | 11'-9 | 8 | #7 | 12'-3 |
| a5 | ✓ | 4 | ✓ | 11'-0 | 6 | ✓ | 11'-9 | 8 | #7 | 12'-6 | 8 | #7 | 13'-0 | 8 | ✓ | 13'-6 |
| a6 | ✓ | | | | | | | | | | 2 | ✓ | 14'-3 | 4 | ✓ | 15'-0 |
| a7 | ✓ | | | | | | | | | | 6 | #5 | 6'-3 | 12 | #5 | 6'-9 |
| a8 | str | 8 | #4 | 5'-9 | 8 | #4 | 6'-3 | 8 | #4 | 6'-6 | 8 | #4 | 6'-9 | 8 | #4 | 7'-0 |
| a9 | ✓ | 8 | ✓ | 7'-3 | 8 | ✓ | 7'-9 | 8 | ✓ | 8'-3 | 8 | ✓ | 8'-6 | 8 | ✓ | 8'-9 |
| a10 | ✓ | 8 | ✓ | 8'-6 | 8 | ✓ | 9'-3 | 8 | ✓ | 9'-9 | 8 | ✓ | 10'-3 | 8 | ✓ | 10'-9 |
| a11 | ✓ | | | | 2 | ✓ | 10'-9 | 4 | ✓ | 11'-6 | 4 | ✓ | 12'-3 | 6 | ✓ | 12'-9 |
| b | B | 12 | #4 | 2'-9 | 14 | ✓ | 2'-9 | 14 | ✓ | 2'-9 | 16 | ✓ | 2'-9 | 18 | ✓ | 2'-9 |
| b1 | str | 4 | #6 | 18'-3 | 4 | #6 | 19'-3 | 4 | #6 | 20'-6 | 4 | #6 | 21'-9 | 4 | #6 | 22'-9 |
| b2 | ✓ | 12 | #4 | 17'-9 | 12 | #4 | 18'-9 | 16 | #4 | 19'-9 | 16 | #4 | 20'-9 | 16 | #4 | 21'-9 |
| b3 | ✓ | 4 | ✓ | 15'-0 | 4 | ✓ | 17'-6 | 4 | ✓ | 14'-0 | 4 | ✓ | 16'-6 | 4 | ✓ | 18'-3 |
| b4 | ✓ | 4 | ✓ | 8'-6 | 4 | ✓ | 11'-6 | 4 | ✓ | 8'-9 | 4 | ✓ | 11'-6 | 4 | ✓ | 13'-9 |
| b5 | ✓ | | | | 4 | ✓ | 5'-9 | 4 | ✓ | 3'-3 | 4 | ✓ | 6'-6 | 4 | ✓ | 9'-0 |
| e | ✓ | 10 | #4 | 2'-6 | 10 | ✓ | 2'-9 | 12 | ✓ | 3'-0 | 12 | ✓ | 3'-3 | 12 | ✓ | 3'-6 |
| e1 | ✓ | 10 | ✓ | 3'-0 | 10 | ✓ | 3'-3 | 10 | ✓ | 3'-9 | 12 | #5 | 4'-0 | 12 | #5 | 4'-3 |
| e2 | ✓ | 10 | ✓ | 3'-6 | 10 | ✓ | 3'-9 | 10 | #5 | 4'-3 | 12 | #6 | 4'-9 | 12 | #6 | 5'-0 |
| e3 | ✓ | 8 | ✓ | 4'-0 | 10 | #5 | 4'-6 | 10 | #6 | 4'-9 | 8 | ✓ | 5'-6 | 10 | #7 | 5'-9 |
| g | G | 2 | ✓ | 20'-9 | 2 | #4 | 21'-9 | 2 | #4 | 22'-9 | 2 | #4 | 23'-9 | 2 | #4 | 24'-9 |
| m | str | 10 | ✓ | 18'-6 | 10 | ✓ | 19'-6 | 12 | ✓ | 20'-6 | 12 | ✓ | 21'-6 | 12 | ✓ | 22'-6 |

## CURB & CUT-OFF WALL STEEL LIST

| Mark | Bend | Size | 8' Spans | | | | 10' Spans | | | | 12' Spans | | | |
|---|---|---|---|---|---|---|---|---|---|---|---|---|---|---|
| | | | 1 Barrel | | ○ | ◇ | 1 Barrel | | ○ | ◇ | 1 Barrel | | ○ | ◇ |
| | | | No | Lgth | No | Lgth | No | Lgth | No | Lgth | No | Lgth | No | Lgth |
| h | str | #6 | 4 | 9'-3 | | 8'-9 | 4 | 11'-3 | | 10'-10 | 4 | 13'-6 | | 13'-0 |
| j | J | #4 | 6 | 3'-6 | 6 | | 8 | 3'-9 | 7 | | 9 | 4'-3 | 8 | |
| k | K | ✓ | 4 | 7'-0 | 6 | | 6 | 7'-0 | 7 | | 7 | 7'-0 | 8 | |
| k1 | str | ✓ | 2 | 5'-9 | | 8'-9 | 2 | 7'-6 | | 10'-10 | 2 | 9'-6 | | 13'-0 |

○ Additional number of bars per each extra barrel.
◇ Additional length of bars per each extra barrel.

## DIMENSIONS

| Height of Opening | B | C | D | E | F | G | J | K |
|---|---|---|---|---|---|---|---|---|
| 8' | 2'-0 | 1'-0 | 1'-9 | 4'-9 | 19'-0 | 3'-2 | 1-10¼ | 4'-9 |
| 9' | 2'-1 | 1'-2 | 2'-0 | 5'-3 | 20'-0 | 3'-9 | 1-11⅜ | 5'-1 |
| 10' | 2'-2 | 1'-4 | 2'-3 | 5'-9 | 21'-0 | 4'-3 | 2'-0⅜ | 5'-4 |
| 11' | 2'-3 | 1'-6 | 2'-6 | 6'-3 | 22'-0 | 4'-10 | 2'-1½ | 5'-7 |
| 12' | 2'-4 | 1'-8 | 2'-9 | 6'-9 | 23'-0 | 5'-4 | 2'-2½ | 5'-9 |

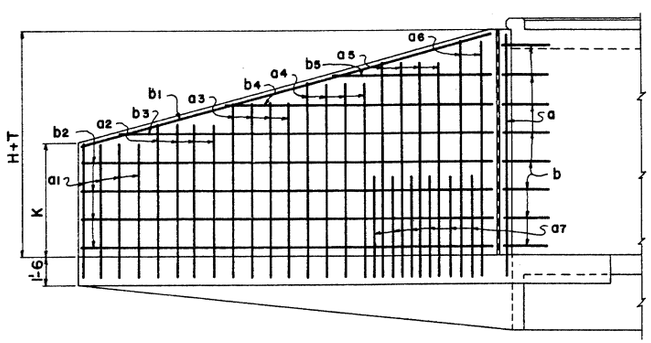


WING ELEVATION
(Back Face Reinf.)

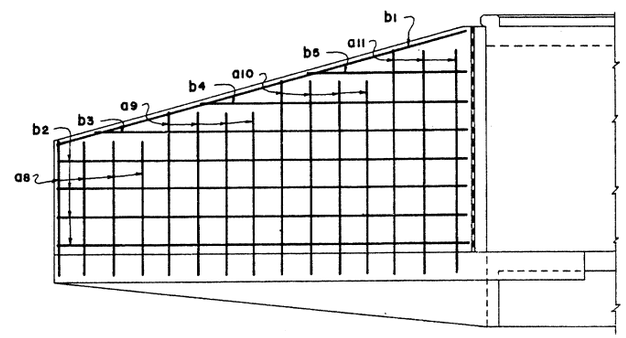


WING ELEVATION
(Front Face Reinf.)

NOTE:
See B-01.10 for general notes and miscellaneous details.
See B-07.10 for concrete and steel headwall quantities.

| DESIGN | GEN. DRY | 8-72 |
|---|---|---|
| DRAWN | RWM, APJ | 8-72 |
| CHECKED | WT, MAB | 3-73 |

| NO. | DESCRIPTION OF REVISIONS | MADE BY | DATE |
|---|---|---|---|
| 1 | Stirrups - 12' Span | SEA | 10-74 |
| 2 | Wing thickness & curb height | JTW | 7-76 |
| 3 | | | |

DESIGN APPROVED R.C. Brechler
APPROVED FOR DISTRIBUTION F.A. Kesler

ARIZONA
DEPARTMENT OF TRANSPORTATION
HIGHWAYS DIVISION
STANDARD PLANS

OUTLET WINGS
RIGHT ANGLE CULVERT
6:1 SLOPE, HEIGHT 8' TO 12'

REVISION

STANDARD NO. CW6-4
PLAN NO. B-0540

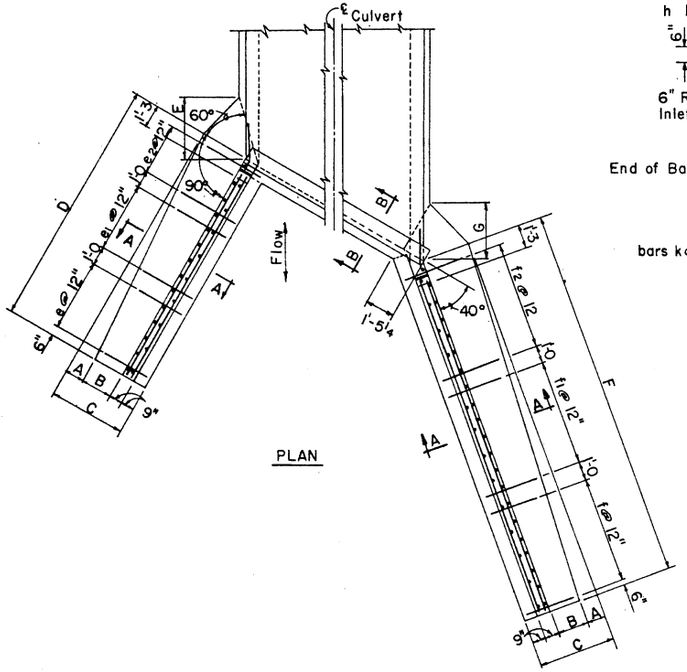


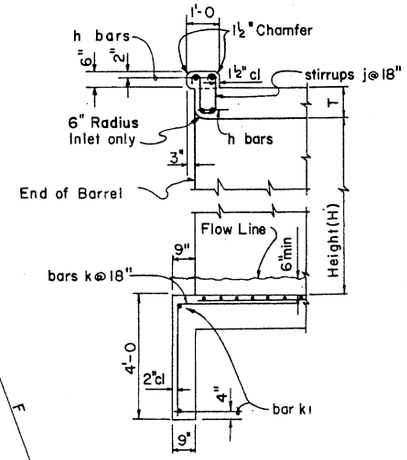


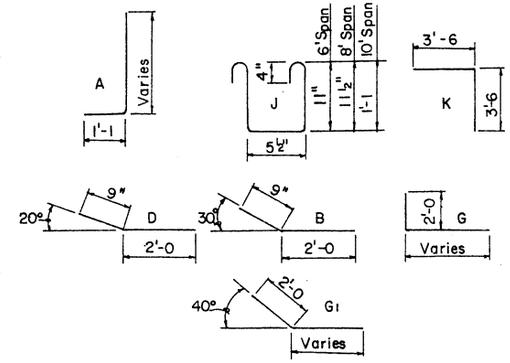


DIMENSIONS

| Height of Opening | A | B | C | D | E | F | G | J | K |
|---|---|---|---|---|---|---|---|---|---|
| 3' | 0 | 9" | 2'-3 | 7'-0 | 8" | 10'-6 | 8" | 2'-4 | 2'-4 |
| 4' | 4" | 11" | 2'-9 | 9'-0 | 1'-5 | 13'-6 | 1'-3 | 3'-0 | 3'-1 |
| 5' | 7" | 1'-2 | 3'-3 | 11'-0 | 2'-1 | 16'-6 | 1'-11 | 3'-10 | 3'-11 |
| 6' | 1'-0 | 1'-3 | 3'-9 | 12'-6 | 2'-9 | 19'-6 | 2'-7 | 4'-5 | 4'-5 |
| 7' | 1'-3 | 1'-6 | 4'-3 | 14'-0 | 3'-5 | 21'-0 | 3'-2 | 4'-11 | 5'-0 |

INLET OR OUTLET WINGS STEEL LIST

| Mark | Bend | 3' Height | | | 4' Height | | | 5' Height | | | 6' Height | | | 7' Height | | |
|---|---|---|---|---|---|---|---|---|---|---|---|---|---|---|---|---|
| | | No | Size | Lgth | No | Size | Lgth | No | Size | Lgth | No | Size | Lgth | No | Size | Lgth |
| SHORT WING | | | | | | | | | | | | | | | | |
| a | A | 3 | #5 | 4'-3 | 4 | #5 | 5'-0 | 4 | #5 | 5'-9 | 4 | #5 | 6'-3 | 4 | #5 | 6'-9 |
| a1 | ✓ | 3 | ✓ | 5'-0 | 4 | ✓ | 5'-9 | 4 | ✓ | 6'-6 | 4 | ✓ | 7'-3 | 4 | ✓ | 7'-9 |
| a2 | ✓ | 2 | ✓ | 5'-9 | 2 | ✓ | 6'-6 | 2 | ✓ | 7'-3 | 3 | ✓ | 8'-0 | 4 | ✓ | 8'-6 |
| a3 | ✓ | | | | | | | 2 | ✓ | 7'-6 | 2 | ✓ | 8'-6 | 3 | ✓ | 9'-6 |
| a4 | str. | 2 | #4 | 3'-3 | 3 | #4 | 3'-9 | 3 | #4 | 4'-9 | 3 | #4 | 5'-3 | 3 | #4 | 5'-9 |
| a5 | ✓ | 2 | ✓ | 4'-0 | 3 | ✓ | 4'-9 | 3 | ✓ | 5'-6 | 3 | ✓ | 6'-3 | 3 | ✓ | 6'-9 |
| a6 | ✓ | 1 | ✓ | 4'-9 | | | | 2 | ✓ | 6'-6 | 2 | ✓ | 7'-0 | 4 | ✓ | 7'-9 |
| b | B | 3 | ✓ | 2'-9 | 4 | #4 | 2'-9 | 5 | ✓ | 2'-9 | 5 | ✓ | 2'-9 | 6 | ✓ | 2'-9 |
| b1 | str. | 2 | #6 | 6'-3 | 2 | #6 | 8'-3 | 2 | #6 | 10'-0 | 2 | #6 | 11'-6 | 2 | #6 | 13'-3 |
| b2 | ✓ | 4 | #4 | 6'-0 | 4 | #4 | 8'-0 | 6 | #4 | 10'-0 | 6 | #4 | 11'-3 | 6 | #4 | 13'-0 |
| b3 | ✓ | | | | 2 | ✓ | 6'-9 | 2 | ✓ | 4'-6 | 2 | ✓ | 8'-9 | 2 | ✓ | 12'-0 |
| b4 | ✓ | | | | | | | | | | | | | 2 | ✓ | 6'-9 |
| e | ✓ | 7 | #4 | 1'-9 | 5 | #4 | 1'-9 | 4 | #4 | 2'-0 | 5 | #4 | 2'-3 | 5 | ✓ | 2'-6 |
| e1 | ✓ | | | | 4 | ✓ | 2'-0 | 4 | ✓ | 2'-3 | 4 | ✓ | 2'-9 | 5 | ✓ | 3'-0 |
| e2 | ✓ | | | | | | | 3 | ✓ | 2'-6 | 4 | ✓ | 3'-0 | 4 | ✓ | 3'-6 |
| g | G | 1 | #4 | 8'-9 | 1 | #4 | 10'-9 | 1 | ✓ | 12'-9 | 1 | ✓ | 14'-0 | 1 | ✓ | 15'-6 |
| m | str. | 4 | ✓ | 6'-6 | 4 | ✓ | 8'-6 | 5 | ✓ | 10'-6 | 5 | ✓ | 12'-0 | 5 | ✓ | 13'-6 |
| LONG WING | | | | | | | | | | | | | | | | |
| c | A | 3 | #5 | 4'-3 | 4 | #5 | 5'-0 | 4 | #5 | 5'-9 | 5 | #5 | 6'-3 | 5 | #5 | 7'-0 |
| c1 | ✓ | 3 | ✓ | 4'-9 | 4 | ✓ | 5'-6 | 4 | ✓ | 6'-3 | 5 | ✓ | 7'-0 | 5 | ✓ | 7'-6 |
| c2 | ✓ | 3 | ✓ | 5'-3 | 4 | ✓ | 6'-0 | 4 | ✓ | 6'-9 | 5 | ✓ | 7'-6 | 5 | ✓ | 8'-3 |
| c3 | ✓ | 2 | ✓ | 5'-9 | 2 | ✓ | 6'-6 | 3 | ✓ | 7'-3 | 3 | ✓ | 8'-3 | 5 | ✓ | 9'-0 |
| c4 | ✓ | | | | | | | 2 | ✓ | 7'-9 | 2 | ✓ | 8'-6 | 2 | ✓ | 9'-6 |
| c5 | str. | 2 | #4 | 3'-3 | 3 | #4 | 4'-0 | 3 | #4 | 4'-9 | 4 | #4 | 5'-3 | 4 | #4 | 5'-9 |
| c6 | ✓ | 2 | ✓ | 3'-9 | 3 | ✓ | 4'-6 | 3 | ✓ | 5'-3 | 4 | ✓ | 6'-0 | 4 | ✓ | 6'-9 |
| c7 | ✓ | 2 | ✓ | 4'-3 | 3 | ✓ | 5'-3 | 3 | ✓ | 5'-9 | 4 | ✓ | 6'-9 | 4 | ✓ | 7'-6 |
| c8 | ✓ | 1 | ✓ | 4'-6 | | | | 2 | ✓ | 6'-6 | 1 | ✓ | 7'-6 | 2 | ✓ | 8'-3 |
| d | D | 3 | ✓ | 2'-9 | 4 | #4 | 2'-9 | 5 | ✓ | 2'-9 | 5 | ✓ | 2'-9 | 6 | ✓ | 2'-9 |
| d1 | str. | 2 | #6 | 9'-6 | 2 | #6 | 12'-6 | 2 | #6 | 15'-6 | 2 | #6 | 18'-6 | 2 | #6 | 20'-3 |
| d2 | ✓ | 4 | #4 | 9'-3 | 4 | #4 | 12'-3 | 6 | #4 | 15'-3 | 6 | #4 | 18'-3 | 6 | #4 | 20'-0 |
| d3 | ✓ | | | | 2 | ✓ | 11'-0 | 2 | ✓ | 7'-3 | 2 | ✓ | 14'-3 | 2 | ✓ | 19'-0 |
| d4 | ✓ | | | | | | | | | | | | | 2 | ✓ | 10'-0 |
| f | ✓ | 11 | #4 | 1'-9 | 7 | #4 | 1'-9 | 6 | #4 | 2'-0 | 7 | #4 | 2'-3 | 7 | ✓ | 2'-6 |
| f1 | ✓ | | | | 7 | ✓ | 2'-0 | 6 | ✓ | 2'-3 | 7 | ✓ | 2'-6 | 7 | ✓ | 3'-0 |
| f2 | ✓ | | | | | | | 5 | ✓ | 2'-6 | 6 | ✓ | 3'-0 | 7 | ✓ | 3'-3 |
| g1 | G1 | 1 | #4 | 12'-9 | 1 | #4 | 15'-9 | 1 | ✓ | 18'-6 | 1 | ✓ | 21'-6 | 1 | ✓ | 23'-0 |
| n | str. | 4 | ✓ | 10'-0 | 4 | ✓ | 13'-0 | 5 | ✓ | 16'-0 | 5 | ✓ | 19'-0 | 5 | ✓ | 20'-6 |

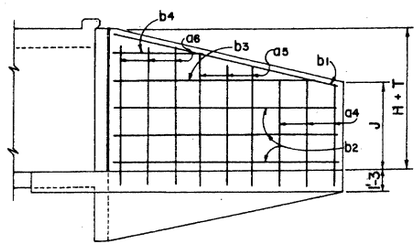


SHORT WING ELEVATION
(Front Face Reinf.)

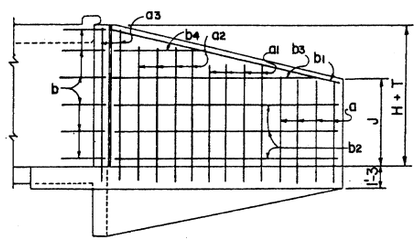


SHORT WING ELEVATION
(Back Face Reinf.)

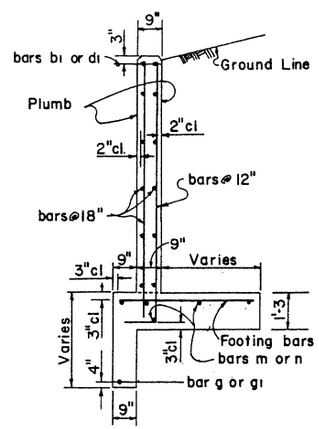


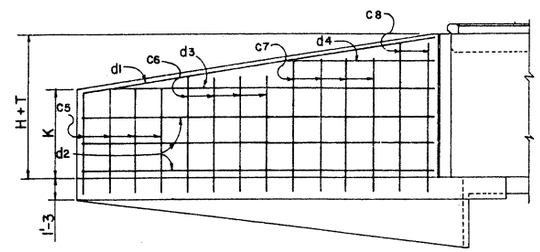


LONG WING ELEVATION
(Front Face Reinf.)

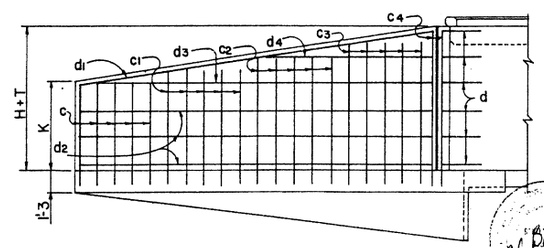


LONG WING ELEVATION
(Back Face Reinf.)

CURB & CUT-OFF WALL STEEL LIST

| Mark | Bend | 6' Spans | | | | | 8' Spans | | | | | 10' Spans | | | | |
|---|---|---|---|---|---|---|---|---|---|---|---|---|---|---|---|---|
| | | 1 Barrel | | | ○ | ◇ | 1 Barrel | | | ○ | ◇ | 1 Barrel | | | ○ | ◇ |
| | | No | Size | Lgth | No | Lgth | No | Size | Lgth | No | Lgth | No | Size | Lgth | No | Lgth |
| h | str. | 4 | #6 | 8'-0 | | 7'-9 | 4 | #6 | 10'-6 | | 10'-1 | 4 | #6 | 13'-0 | | 12'-6 |
| j | J | 6 | #4 | 3'-6 | 5 | | 7 | #4 | 3'-6 | 7 | | 9 | #4 | 3'-9 | 8 | |
| k | K | 4 | ✓ | 7'-0 | 5 | | 6 | ✓ | 7'-0 | 6 | | 7 | ✓ | 7'-0 | 8 | |
| k1 | str. | 2 | ✓ | 5'-9 | | 7'-9 | 2 | ✓ | 8'-0 | | 10'-1 | 2 | ✓ | 10'-6 | | 12'-6 |

○ Additional number of bars per each extra barrel.
◇ Additional length of bars per each extra barrel.

NOTE:
See B-01.10 for general notes and miscellaneous details.
See B-07.10 for concrete and steel headwall quantities.

| | | | |
|---|---|---|---|
| DESIGN | DRY | 8-72 | NO. |
| DRAWN | CAG | 8-72 | 1 |
| CHECKED | NAB | 3-73 | 2 |
| | | | 3 |

DESCRIPTION OF REVISIONS: Curb height now 6"
MADE BY: JTW
DATE: 7-76

DESIGN APPROVED: R.C. Buchler
APPROVED FOR DISTRIBUTION: F.H. Scudder

ARIZONA
DEPARTMENT OF TRANSPORTATION
HIGHWAYS DIVISION
STANDARD PLANS

INLET OR OUTLET WINGS
30° SKEW CULVERT
6:1 SLOPE, HEIGHT 3' TO 7'

REVISION

STANDARD NO. CW6-5
PLAN NO. B-05.50

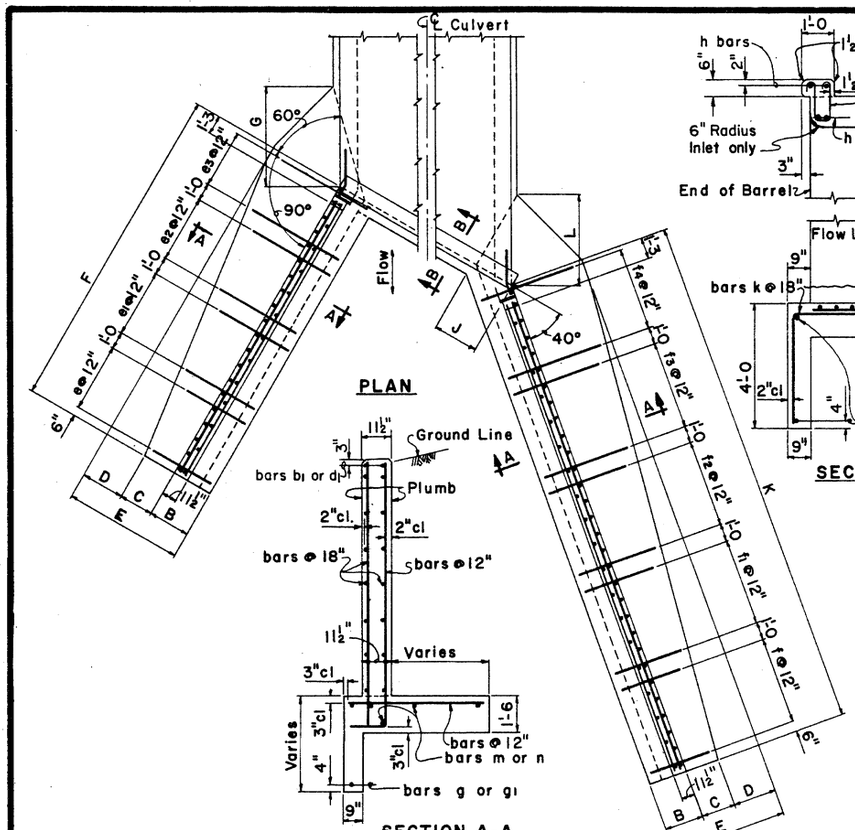


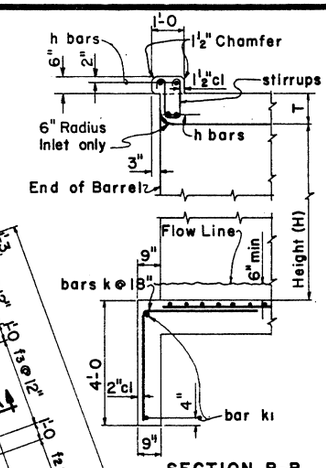


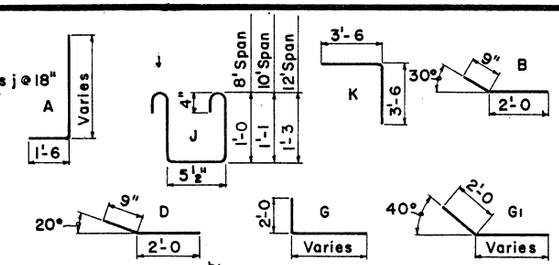


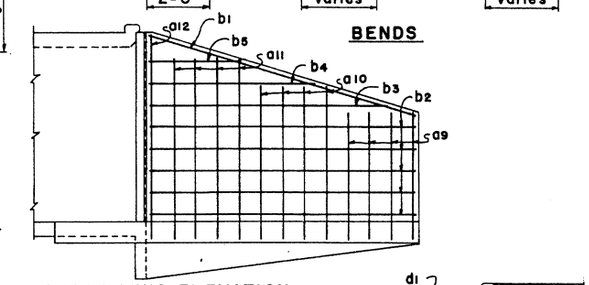


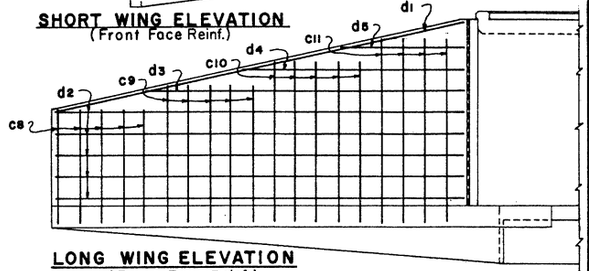


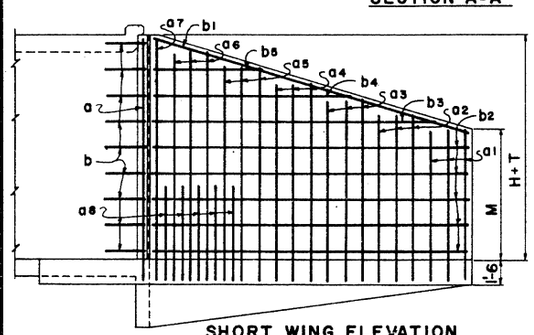


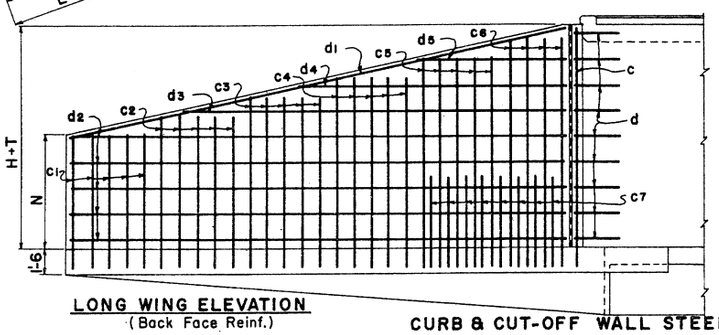


## INLET OR OUTLET WINGS STEEL LIST

| Mark | Bend | 8' Height No | 8' Height Size | 8' Height Lgth | 9' Height No | 9' Height Size | 9' Height Lgth | 10' Height No | 10' Height Size | 10' Height Lgth | 11' Height No | 11' Height Size | 11' Height Lgth | 12' Height No | 12' Height Size | 12' Height Lgth |
|---|---|---|---|---|---|---|---|---|---|---|---|---|---|---|---|---|
| SHORT WING | | | | | | | | | | | | | | | | |
| a | A | 1 | #6 | 11'-3 | 1 | #6 | 12'-3 | 1 | #7 | 13'-3 | 1 | #7 | 14'-3 | 1 | #7 | 15'-3 |
| a1 | ✓ | 3 | #5 | 8'-0 | 3 | #5 | 8'-3 | 3 | #5 | 8'-9 | 3 | #5 | 9'-0 | 3 | #5 | 9'-3 |
| a2 | ✓ | 3 | ✓ | 8'-9 | 3 | ✓ | 9'-0 | 3 | ✓ | 9'-6 | 3 | ✓ | 10'-0 | 3 | ✓ | 10'-3 |
| a3 | ✓ | 3 | ✓ | 9'-6 | 3 | ✓ | 10'-0 | 3 | ✓ | 10'-6 | 3 | #6 | 11'-0 | 3 | #6 | 11'-3 |
| a4 | ✓ | 3 | ✓ | 10'-3 | 3 | #6 | 10'-9 | 3 | #6 | 11'-3 | 3 | #7 | 12'-0 | 3 | #7 | 12'-3 |
| a5 | ✓ | 3 | #6 | 11'-0 | 3 | ✓ | 11'-6 | 3 | #7 | 12'-3 | 3 | ✓ | 12'-9 | 3 | ✓ | 13'-3 |
| a6 | ✓ | | | | 1 | ✓ | 12'-3 | 2 | ✓ | 13'-0 | 3 | ✓ | 13'-9 | 3 | ✓ | 14'-3 |
| a7 | ✓ | | | | | | | | | | | | | 1 | ✓ | 15'-3 |
| a8 | ✓ | | | | | | | | | | 3 | #5 | 6'-3 | 5 | #5 | 6'-9 |
| a9 | str | 4 | #4 | 6'-3 | 4 | #4 | 6'-9 | 4 | #4 | 7'-3 | 4 | #4 | 7'-6 | 4 | #4 | 7'-9 |
| a10 | ✓ | 4 | ✓ | 7'-9 | 4 | ✓ | 8'-6 | 4 | ✓ | 9'-0 | 4 | ✓ | 9'-6 | 4 | ✓ | 9'-9 |
| a11 | ✓ | 2 | ✓ | 9'-3 | 3 | ✓ | 10'-0 | 3 | ✓ | 10'-9 | 4 | ✓ | 11'-3 | 4 | ✓ | 11'-9 |
| a12 | ✓ | | | | | | | | | | | | | 1 | ✓ | 13'-9 |
| b | B | 6 | #4 | 2'-9 | 7 | #4 | 2'-9 | 7 | #4 | 2'-9 | 8 | #4 | 2'-9 | 9 | ✓ | 2'-9 |
| b1 | str | 2 | #6 | 14'-6 | 2 | #6 | 15'-9 | 2 | #6 | 16'-9 | 2 | #6 | 18'-0 | 2 | #6 | 19'-3 |
| b2 | ✓ | 8 | #4 | 14'-3 | 8 | #4 | 15'-3 | 8 | #4 | 16'-3 | 8 | #4 | 17'-3 | 8 | #4 | 18'-3 |
| b3 | ✓ | 2 | ✓ | 7'-9 | 2 | ✓ | 10'-9 | 2 | ✓ | 13'-6 | 2 | ✓ | 15'-9 | 2 | ✓ | 17'-6 |
| b4 | ✓ | | | | 2 | ✓ | 5'-3 | 2 | ✓ | 8'-3 | 2 | ✓ | 11'-0 | 2 | ✓ | 13'-3 |
| b5 | ✓ | | | | | | | | | | 2 | ✓ | 6'-3 | 2 | ✓ | 8'-9 |
| e | ✓ | 4 | #4 | 2'-9 | 5 | #4 | 3'-0 | 5 | #4 | 3'-3 | 5 | ✓ | 3'-3 | 5 | ✓ | 3'-3 |
| e1 | ✓ | 4 | ✓ | 3'-0 | 4 | ✓ | 3'-6 | 5 | ✓ | 3'-9 | 5 | #5 | 4'-0 | 5 | #5 | 4'-0 |
| e2 | ✓ | 4 | ✓ | 3'-9 | 4 | ✓ | 4'-0 | 4 | #5 | 4'-6 | 5 | #6 | 4'-9 | 5 | #6 | 5'-0 |
| e3 | ✓ | 4 | ✓ | 4'-0 | 4 | #5 | 4'-6 | 4 | #6 | 5'-0 | 4 | ✓ | 5'-6 | 5 | #7 | 5'-9 |
| g | G | 1 | ✓ | 17'-0 | 1 | #4 | 18'-0 | 1 | #4 | 19'-0 | 1 | #4 | 20'-0 | 1 | #4 | 21'-0 |
| m | str | 5 | ✓ | 15'-0 | 5 | ✓ | 16'-0 | 5 | ✓ | 17'-0 | 6 | ✓ | 18'-0 | 6 | ✓ | 19'-0 |
| LONG WING | | | | | | | | | | | | | | | | |
| c | A | 1 | #6 | 11'-3 | 1 | #6 | 12'-3 | 1 | #7 | 13'-3 | 1 | #7 | 14'-3 | 1 | #7 | 15'-3 |
| c1 | ✓ | 5 | #5 | 8'-0 | 5 | #5 | 8'-6 | 5 | #5 | 8'-9 | 5 | #5 | 9'-0 | 5 | #5 | 9'-3 |
| c2 | ✓ | 5 | ✓ | 8'-9 | 5 | ✓ | 9'-3 | 5 | ✓ | 9'-6 | 5 | ✓ | 10'-0 | 5 | ✓ | 10'-6 |
| c3 | ✓ | 5 | ✓ | 9'-6 | 5 | ✓ | 10'-0 | 5 | #6 | 10'-6 | 5 | #6 | 11'-0 | 5 | #6 | 11'-6 |
| c4 | ✓ | 5 | ✓ | 10'-3 | 5 | #6 | 11'-0 | 5 | ✓ | 11'-6 | 5 | #7 | 12'-0 | 5 | #7 | 12'-6 |
| c5 | ✓ | 2 | #6 | 11'-3 | 4 | ✓ | 11'-9 | 5 | #7 | 12'-6 | 5 | ✓ | 13'-0 | 5 | ✓ | 13'-9 |
| c6 | ✓ | | | | | | | 1 | ✓ | 13'-3 | 2 | ✓ | 14'-0 | 4 | ✓ | 14'-9 |
| c7 | ✓ | | | | | | | | | | 4 | #5 | 6'-3 | 8 | #5 | 6'-9 |
| c8 | str | 5 | #4 | 6'-6 | 5 | #4 | 7'-0 | 5 | #4 | 7'-3 | 5 | #4 | 7'-6 | 5 | #4 | 7'-9 |
| c9 | ✓ | 5 | ✓ | 7'-9 | 5 | ✓ | 8'-3 | 5 | ✓ | 8'-9 | 5 | ✓ | 9'-0 | 5 | ✓ | 9'-6 |
| c10 | ✓ | 5 | ✓ | 8'-9 | 4 | ✓ | 9'-6 | 5 | ✓ | 10'-0 | 5 | ✓ | 10'-6 | 5 | ✓ | 11'-0 |
| c11 | ✓ | | | | 2 | ✓ | 10'-9 | 2 | ✓ | 11'-6 | 3 | ✓ | 12'-0 | 4 | ✓ | 12'-9 |
| d | D | 6 | #4 | 2'-9 | 7 | ✓ | 2'-9 | 7 | ✓ | 2'-9 | 8 | ✓ | 2'-9 | 9 | ✓ | 2'-9 |
| d1 | str | 2 | #6 | 22'-0 | 2 | #6 | 24'-0 | 2 | #6 | 25'-6 | 2 | #6 | 27'-3 | 2 | #6 | 28'-9 |
| d2 | ✓ | 8 | #4 | 21'-9 | 8 | #4 | 23'-9 | 8 | #4 | 25'-3 | 8 | #4 | 26'-9 | 10 | #4 | 28'-3 |
| d3 | ✓ | 2 | ✓ | 12'-6 | 2 | ✓ | 17'-6 | 2 | ✓ | 21'-3 | 2 | ✓ | 24'-9 | 2 | ✓ | 20'-9 |
| d4 | ✓ | | | | 2 | ✓ | 8'-9 | 2 | ✓ | 13'-3 | 2 | ✓ | 17'-3 | 2 | ✓ | 13'-9 |
| d5 | ✓ | | | | | | | | | | 2 | ✓ | 9'-9 | 2 | ✓ | 6'-9 |
| f | ✓ | 5 | #4 | 2'-9 | 5 | #4 | 3'-0 | 6 | #4 | 3'-3 | 6 | ✓ | 3'-3 | 6 | ✓ | 3'-3 |
| f1 | ✓ | 5 | ✓ | 3'-0 | 5 | ✓ | 3'-3 | 6 | ✓ | 3'-9 | 6 | ✓ | 3'-9 | 6 | ✓ | 4'-0 |
| f2 | ✓ | 5 | ✓ | 3'-6 | 5 | ✓ | 3'-9 | 5 | ✓ | 4'-3 | 6 | #5 | 4'-3 | 6 | #5 | 4'-6 |
| f3 | ✓ | 4 | ✓ | 3'-9 | 5 | #5 | 4'-0 | 5 | #5 | 4'-6 | 5 | #6 | 5'-0 | 6 | #6 | 5'-3 |
| f4 | ✓ | 4 | ✓ | 4'-0 | 5 | ✓ | 4'-6 | 5 | #6 | 5'-0 | 5 | ✓ | 5'-6 | 6 | #7 | 5'-9 |
| g1 | G1 | 1 | ✓ | 26-0 | 1 | #4 | 28'-0 | 1 | #4 | 29'-9 | 1 | #4 | 31'-3 | 1 | #4 | 32'-9 |
| n | str | 5 | ✓ | 22'-6 | 5 | ✓ | 24'-6 | 5 | ✓ | 26'-0 | 6 | ✓ | 27'-6 | 6 | ✓ | 29'-0 |

## DIMENSIONS

| Height of Opening | B | C | D | E | F | G | J | K | L | M | N |
|---|---|---|---|---|---|---|---|---|---|---|---|
| 8' | 2'-0 | 1'-3 | 1'-6 | 4'-9 | 15'-6 | 3'-5 | 2'-2⅝ | 23'-0 | 3'-2 | 5'-3 | 5'-5 |
| 9' | 2'-1 | 1'-5 | 1'-9 | 5'-3 | 16'-6 | 4'-0 | 2'-4⅛ | 25'-0 | 3'-9 | 5'-8 | 5'-10 |
| 10' | 2'-2 | 1'-7 | 2'-0 | 5'-9 | 17'-6 | 4'-7 | 2'-5¾ | 26'-6 | 4'-3 | 6'-1 | 6'-2 |
| 11' | 2'-3 | 1'-6 | 2'-6 | 6'-3 | 18'-6 | 5'-2 | 2'-7¼ | 28'-0 | 4'-10 | 6'-5 | 6'-6 |
| 12' | 2'-4 | 1'-5 | 3'-0 | 6'-9 | 19'-6 | 5'-8 | 2'-8⅞ | 29'-6 | 5'-4 | 6'-7 | 6'-9 |

## CURB & CUT-OFF WALL STEEL LIST

| Mark | Bend | 8' Spans I Barrel No | 8' Spans I Barrel Size | 8' Spans I Barrel Lgth | 8' Spans ○ No | 8' Spans ◇ Lgth | 10' Spans I Barrel No | 10' Spans I Barrel Size | 10' Spans I Barrel Lgth | 10' Spans ○ No | 10' Spans ◇ Lgth | 12' Spans I Barrel No | 12' Spans I Barrel Size | 12' Spans I Barrel Lgth | 12' Spans ○ No | 12' Spans ◇ Lgth |
|---|---|---|---|---|---|---|---|---|---|---|---|---|---|---|---|---|
| h | str | 4 | #6 | 10'-6 | | 10'-1 | 4 | #6 | 13'-0 | | 12'-6 | 4 | #7 | 15'-9 | | 15'-0 |
| j | J | 7 | #4 | 3'-6 | 7 | | 9 | #4 | 3'-9 | 8 | | 10 | #4 | 4'-3 | 10 | |
| k | K | 5 | ✓ | 7'-0 | 6 | | 7 | ✓ | 7'-0 | 8 | | 8 | ✓ | 7'-0 | 9 | |
| k1 | str | 2 | ✓ | 6'-9 | | 10'-1 | 2 | ✓ | 8'-9 | | 12'-6 | 2 | ✓ | 11'-3 | | 15'-0 |

○ Additional number of bars per each extra barrel.
◇ Additional length of bars per each extra barrel.

NOTE:
See B-01.10 for general notes and miscellaneous details.
See B-07.10 for concrete and steel headwall quantities.

| NO. | DESCRIPTION OF REVISIONS | MADE BY | DATE |
|---|---|---|---|
| 1 | Stirrups - 12' Span | SEA | 10-74 |
| 2 | Wing thickness & curb height | JTW | 7-76 |
| 3 | | | |

| | | |
|---|---|---|
| DESIGN | GWW, DHY | 8-72 |
| DRAWN | RWM, JAV | 8-72 |
| CHECKED | WT, NAB | 3-73 |

DESIGN APPROVED R.C. Brechler

APPROVED FOR DISTRIBUTION

ARIZONA
DEPARTMENT OF TRANSPORTATION
HIGHWAYS DIVISION
STANDARD PLANS

INLET OR OUTLET WINGS
30° SKEW CULVERT
6:1 SLOPE, HEIGHT 8' TO 12'

REVISION

STANDARD NO. CW6-6

PLAN NO. B-05.60

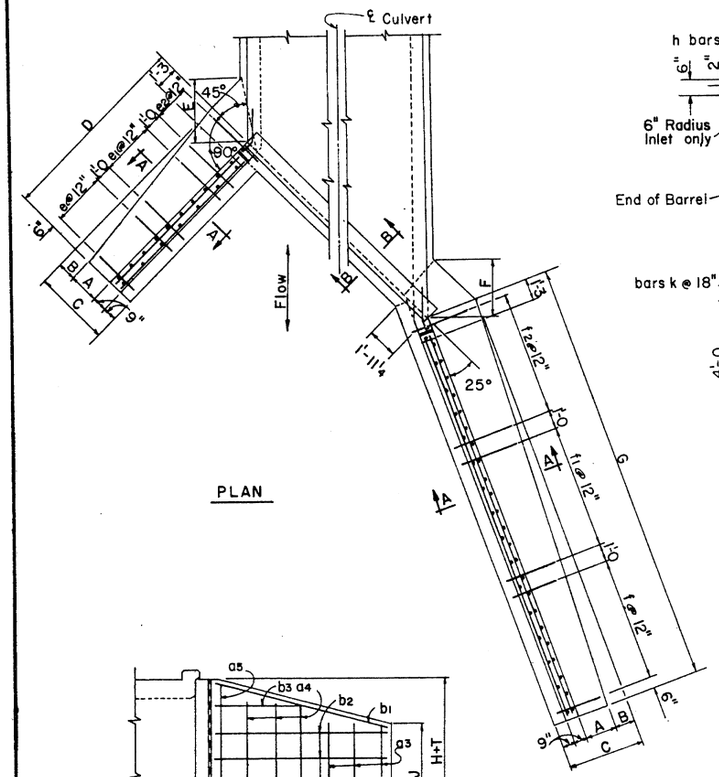


PLAN

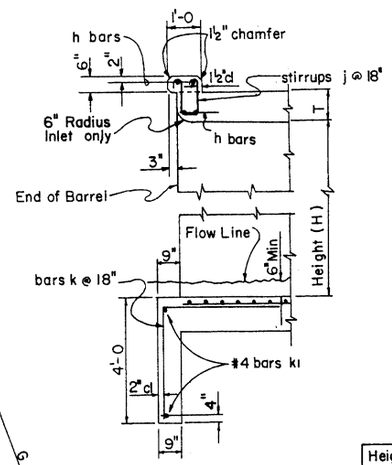


SECTION B-B

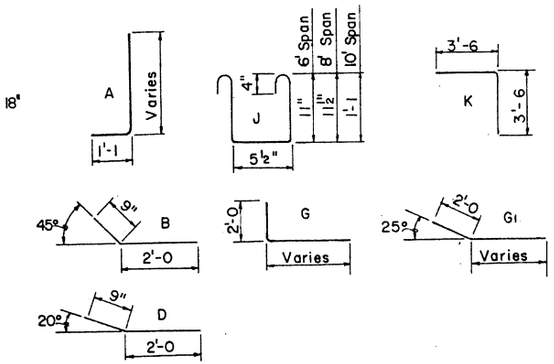


BENDS

DIMENSIONS

| Height of Opening | A | B | C | D | E | F | G | J | K |
|---|---|---|---|---|---|---|---|---|---|
| 3' | 9" | 0 | 2'-3 | 6'-0 | 9" | 8" | 11'-0 | 2'-6 | 2'-9 |
| 4' | 1'-0 | 3" | 2'-9 | 7'-6 | 1'-5 | 1'-3 | 14'-6 | 3'-3 | 3'-6 |
| 5' | 1'-4 | 5" | 3'-3 | 9'-0 | 2'-2 | 1'-11 | 18'-0 | 4'-1 | 4'-3 |
| 6' | 1'-8 | 7" | 3'-9 | 10'-0 | 2'-10 | 2'-7 | 21'-0 | 4'-10 | 5'-0 |
| 7' | 2'-0 | 9" | 4'-3 | 11'-0 | 3'-7 | 3'-2 | 24'-0 | 5'-6 | 5'-8 |

INLET OR OUTLET WINGS STEEL LIST

| Mark | Bend | 3' Height | | | 4' Height | | | 5' Height | | | 6' Height | | | 7' Height | | |
|---|---|---|---|---|---|---|---|---|---|---|---|---|---|---|---|---|
| | | No | Size | Lgth | No | Size | Lgth | No | Size | Lgth | No | Size | Lgth | No | Size | Lgth |
| SHORT WING | | | | | | | | | | | | | | | | |
| a | A | 3 | #5 | 4'-6 | 3 | #5 | 5'-3 | 4 | #5 | 6'-0 | 4 | #5 | 6'-9 | 4 | #5 | 7'-6 |
| a1 | ✓ | 2 | ✓ | 5'-3 | 3 | ✓ | 5'-9 | 4 | ✓ | 6'-9 | 4 | ✓ | 7'-6 | 4 | ✓ | 8'-6 |
| a2 | ✓ | 2 | ✓ | 5'-9 | 2 | ✓ | 6'-9 | 2 | ✓ | 7'-9 | 3 | ✓ | 8'-6 | 4 | ✓ | 9'-3 |
| a3 | str | 2 | #4 | 3'-3 | 2 | #4 | 4'-3 | 3 | #4 | 5'-0 | 3 | #4 | 5'-9 | 3 | #4 | 6'-6 |
| a4 | ✓ | 2 | ✓ | 4'-0 | 2 | ✓ | 4'-9 | 3 | ✓ | 6'-0 | 3 | ✓ | 6'-6 | 3 | ✓ | 7'-6 |
| a5 | ✓ | | | | 1 | ✓ | 5'-6 | | | | 1 | ✓ | 7'-6 | 2 | ✓ | 8'-6 |
| b | B | 3 | #4 | 2'-9 | 4 | ✓ | 2'-9 | 5 | #4 | 2'-9 | 5 | ✓ | 2'-9 | 6 | ✓ | 2'-9 |
| b1 | str | 2 | #6 | 5'-3 | 2 | #6 | 6'-6 | 2 | #6 | 8'-3 | 2 | #6 | 9'-3 | 2 | #6 | 10'-3 |
| b2 | ✓ | 4 | #4 | 5'-0 | 4 | #4 | 6'-3 | 6 | #4 | 8'-0 | 6 | #4 | 9'-0 | 8 | #4 | 10'-0 |
| b3 | ✓ | | | | 2 | ✓ | 5'-9 | 2 | ✓ | 4'-0 | 2 | ✓ | 8'-3 | 2 | ✓ | 5'-3 |
| e | ✓ | 6 | #4 | 1'-9 | 8 | ✓ | 2'-0 | 5 | ✓ | 2'-3 | 4 | ✓ | 2'-6 | 4 | ✓ | 3'-0 |
| e1 | ✓ | | | | | | | 4 | ✓ | 2'-6 | 3 | ✓ | 2'-9 | 4 | ✓ | 3'-3 |
| e2 | ✓ | | | | | | | | | | 3 | ✓ | 3'-0 | 3 | ✓ | 3'-6 |
| g | G | 1 | #4 | 8'-0 | 1 | #4 | 9'-3 | 1 | #4 | 10'-9 | 1 | ✓ | 11'-9 | 1 | ✓ | 12'-9 |
| m | str | 4 | ✓ | 5'-6 | 4 | ✓ | 7'-0 | 4 | ✓ | 8'-6 | 5 | ✓ | 9'-6 | 5 | ✓ | 10'-6 |
| LONG WING | | | | | | | | | | | | | | | | |
| c | A | 5 | #5 | 4'-6 | 5 | #5 | 5'-6 | 5 | #5 | 6'-0 | 5 | #5 | 6'-9 | 5 | #5 | 7'-6 |
| c1 | ✓ | 5 | ✓ | 5'-3 | 5 | ✓ | 6'-0 | 5 | ✓ | 6'-6 | 5 | ✓ | 7'-3 | 5 | ✓ | 8'-0 |
| c2 | ✓ | 2 | ✓ | 5'-9 | 3 | ✓ | 6'-6 | 5 | ✓ | 7'-0 | 5 | ✓ | 7'-9 | 5 | ✓ | 8'-6 |
| c3 | ✓ | | | | 2 | ✓ | 6'-9 | 4 | ✓ | 7'-6 | 5 | ✓ | 8'-3 | 5 | ✓ | 9'-0 |
| c4 | ✓ | | | | | | | | | | 2 | ✓ | 8'-9 | 5 | ✓ | 9'-3 |
| c5 | str | 3 | #4 | 3'-6 | 3 | #4 | 4'-3 | 4 | #4 | 5'-0 | 4 | #4 | 5'-9 | 4 | #4 | 6'-6 |
| c6 | ✓ | 3 | ✓ | 4'-0 | 3 | ✓ | 4'-9 | 4 | ✓ | 5'-6 | 4 | ✓ | 6'-3 | 4 | ✓ | 7'-0 |
| c7 | ✓ | 2 | ✓ | 4'-6 | 4 | ✓ | 5'-3 | 4 | ✓ | 6'-3 | 4 | ✓ | 7'-0 | 4 | ✓ | 7'-6 |
| c8 | ✓ | | | | | | | | | | 2 | ✓ | 7'-6 | 4 | ✓ | 8'-0 |
| d | D | 3 | #4 | 2'-9 | 4 | #4 | 2'-9 | 5 | #4 | 2'-9 | 5 | ✓ | 2'-9 | 6 | ✓ | 2'-9 |
| d1 | str | 2 | #6 | 10'-0 | 2 | #6 | 13'-6 | 2 | #6 | 17'-0 | 2 | #6 | 20'-0 | 2 | #6 | 23'-0 |
| d2 | ✓ | 4 | #4 | 10'-0 | 6 | #4 | 13'-3 | 6 | #4 | 17'-0 | 8 | #4 | 20'-0 | 8 | #4 | 23'-0 |
| d3 | ✓ | | | | | | | 2 | ✓ | 9'-0 | | | | 2 | ✓ | 13'-6 |
| f | ✓ | 11 | #4 | 1'-9 | 15 | #4 | 2'-0 | 9 | ✓ | 2'-3 | 7 | #4 | 2'-6 | 8 | ✓ | 3'-0 |
| f1 | ✓ | | | | | | | 9 | ✓ | 2'-6 | 7 | ✓ | 2'-9 | 8 | ✓ | 3'-3 |
| f2 | ✓ | | | | | | | | | | 7 | ✓ | 3'-0 | 8 | ✓ | 3'-6 |
| g1 | G1 | 1 | #4 | 14'-3 | 1 | #4 | 17'-9 | 1 | #4 | 21'-3 | 1 | ✓ | 24'-3 | 1 | ✓ | 27'-3 |
| n | str | 4 | ✓ | 10'-6 | 4 | ✓ | 14'-0 | 4 | ✓ | 17'-6 | 5 | ✓ | 20'-6 | 5 | ✓ | 23'-6 |

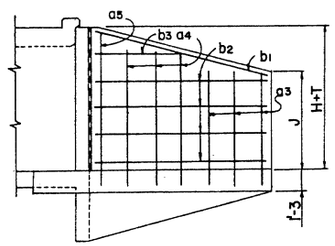


SHORT WING ELEVATION
(Front Face Reinf.)

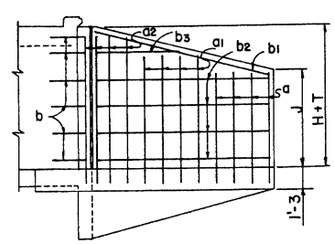


SHORT WING ELEVATION
(Back Face Reinf.)

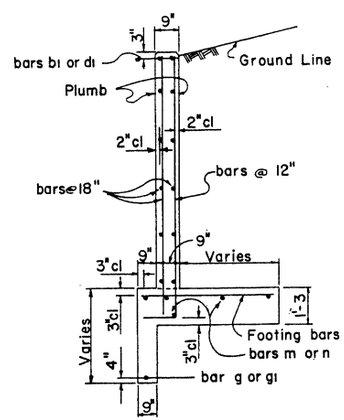


SECTION A-A

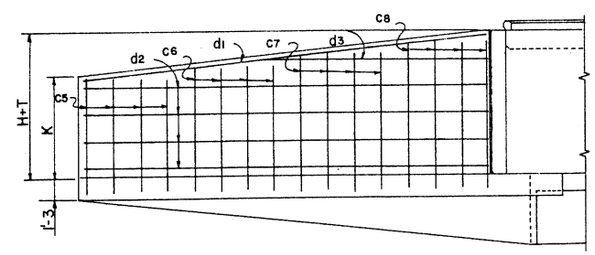


LONG WING ELEVATION
(Front Face Reinf.)

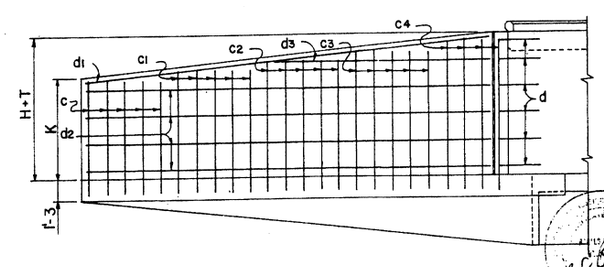


LONG WING ELEVATION
(Back Face Reinf.)

CURB & CUT-OFF WALL STEEL LIST

| Mark | Bend | 6' Spans | | | | | 8' Spans | | | | | 10' Spans | | | | |
|---|---|---|---|---|---|---|---|---|---|---|---|---|---|---|---|---|
| | | 1 Barrel | | | ○ | ◇ | 1 Barrel | | | ○ | ◇ | 1 Barrel | | | ○ | ◇ |
| | | No | Size | Lgth | No | Lgth | No | Size | Lgth | No | Lgth | No | Size | Lgth | No | Lgth |
| h | str | 4 | #6 | 10'-0 | | 9'-6 | 4 | #6 | 13'-0 | | 12'-4 | 4 | #7 | 16'-3 | | 15'-4 |
| j | J | 7 | #4 | 3'-6 | 6 | | 9 | #4 | 3'-6 | 8 | | 11 | #4 | 3'-9 | 10 | |
| k | K | 6 | ✓ | 7'-0 | 6 | | 7 | ✓ | 7'-0 | 8 | | 9 | ✓ | 7'-0 | 10 | |
| k1 | str | 2 | ✓ | 7'-0 | | 9'-6 | 2 | ✓ | 10'-0 | | 12'-4 | 2 | ✓ | 13'-0 | | 15'-4 |

○ Additional number of bars per each extra barrel.
◇ Additional length of bars per each extra barrel.

NOTE:

See B-01.10 for general notes and miscellaneous details.
See B-07.10 for concrete and steel headwall quantities.

| NO. | DESCRIPTION OF REVISIONS | MADE BY | DATE |
|---|---|---|---|
| 1 | ~~Skew Wings 75%~~ | ~~JTW~~ | ~~12-74~~ |
| 2 | Curb height now 6" | JTW | 7-76 |
| 3 | | | |

| | DHY | NO. |
|---|---|---|
| DESIGN | 8-72 | 1 |
| DRAWN | 8-72 | 2 |
| CHECKED | 3-73 | 3 |

DESIGN APPROVED: R.C. Buchler

APPROVED FOR DISTRIBUTION: E.A. Donalin

ARIZONA
DEPARTMENT OF TRANSPORTATION
HIGHWAYS DIVISION
STANDARD PLANS

INLET OR OUTLET WINGS
45° SKEW CULVERT
6:1 SLOPE, HEIGHT 3' TO 7'

REVISION

STANDARD NO. CW6-7

PLAN NO. B-05.70

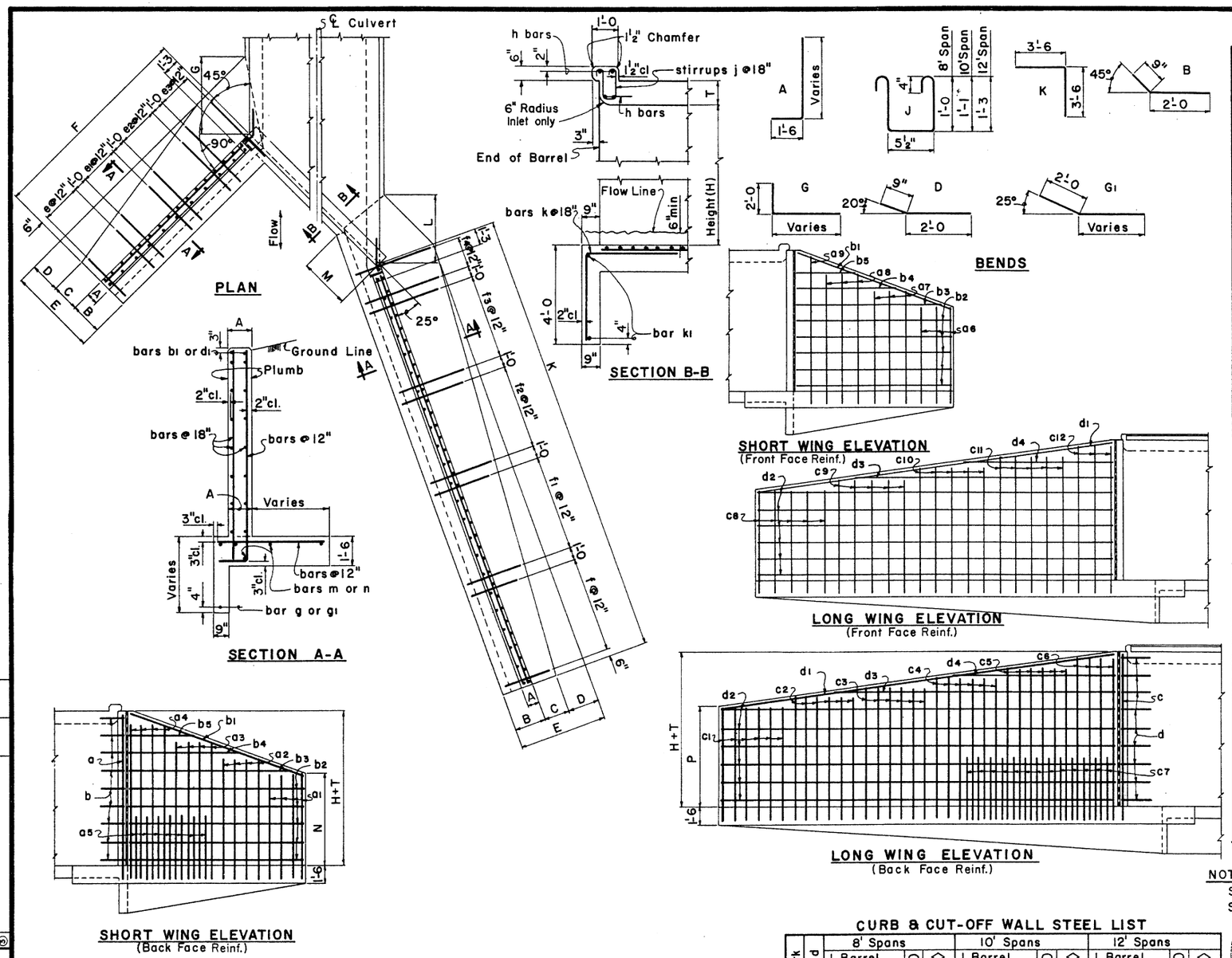


## INLET OR OUTLET WINGS STEEL LIST

| Mark | Bend | 8' Height | | | 9' Height | | | 10' Height | | | 11' Height | | | 12' Height | | |
|---|---|---|---|---|---|---|---|---|---|---|---|---|---|---|---|---|
| | | No | Size | Lgth | No | Size | Lgth | No | Size | Lgth | No | Size | Lgth | No | Size | Lgth |
| SHORT WING | | | | | | | | | | | | | | | | |
| a | A | 1 | #6 | 11'-3 | 1 | #6 | 12'-3 | 1 | #7 | 13'-3 | 1 | #7 | 14'-3 | 1 | #7 | 15'-3 |
| a1 | ✓ | 4 | #5 | 8'-9 | 4 | #5 | 9'-3 | 4 | #5 | 9'-9 | 4 | #5 | 10'-0 | 4 | #6 | 10'-6 |
| a2 | ✓ | 4 | ✓ | 9'-9 | 4 | #6 | 10'-3 | 4 | #6 | 11'-0 | 4 | #6 | 11'-6 | 4 | #7 | 11'-9 |
| a3 | ✓ | 3 | #6 | 10'-9 | 4 | ✓ | 11'-6 | 4 | #7 | 12'-0 | 4 | #7 | 12'-9 | 4 | ✓ | 13'-3 |
| a4 | ✓ | | | | | | | 1 | ✓ | 13'-3 | 2 | ✓ | 14'-0 | 4 | ✓ | 14'-6 |
| a5 | ✓ | | | | | | | | | | 4 | #5 | 6'-3 | 7 | #5 | 6'-9 |
| a6 | str | 3 | #4 | 7'-3 | 3 | #4 | 7'-9 | 3 | #4 | 8'-3 | 3 | #4 | 8'-9 | 3 | #4 | 9'-0 |
| a7 | ✓ | 3 | ✓ | 8'-3 | 3 | ✓ | 9'-0 | 3 | ✓ | 9'-6 | 3 | ✓ | 10'-0 | 3 | ✓ | 10'-6 |
| a8 | ✓ | 2 | ✓ | 9'-6 | 2 | ✓ | 10'-3 | 3 | ✓ | 10'-9 | 3 | ✓ | 11'-6 | 3 | ✓ | 12'-0 |
| a9 | ✓ | | | | | | | | | | 1 | ✓ | 13'-0 | 1 | ✓ | 13'-6 |
| b | B | 6 | #4 | 2'-9 | 7 | #4 | 2'-9 | 7 | #4 | 2'-9 | 8 | ✓ | 2'-9 | 9 | ✓ | 2'-9 |
| b1 | str | 2 | #6 | 11'-0 | 2 | #6 | 12'-0 | 2 | #6 | 13'-3 | 2 | #6 | 14'-3 | 2 | #6 | 15'-6 |
| b2 | ✓ | 8 | #4 | 10'-9 | 8 | #4 | 11'-9 | 10 | #4 | 12'-9 | 10 | #4 | 13'-9 | 10 | #4 | 14'-9 |
| b3 | ✓ | 2 | ✓ | 7'-9 | 2 | ✓ | 11'-0 | 2 | ✓ | 8'-3 | 2 | ✓ | 11'-0 | 2 | ✓ | 13'-0 |
| b4 | ✓ | | | | 2 | ✓ | 5'-6 | | | | 2 | ✓ | 6'-3 | 2 | ✓ | 8'-9 |
| b5 | ✓ | | | | | | | | | | | | | 2 | ✓ | 4'-3 |
| e | ✓ | 4 | #4 | 3'-0 | 4 | #4 | 3'-3 | 4 | #4 | 3'-6 | 4 | #4 | 3'-9 | 4 | ✓ | 3'-9 |
| e1 | ✓ | 4 | ✓ | 3'-6 | 4 | ✓ | 3'-9 | 4 | ✓ | 4'-0 | 4 | #5 | 4'-3 | 4 | #5 | 4'-3 |
| e2 | ✓ | 4 | ✓ | 4'-0 | 3 | ✓ | 4'-3 | 3 | #5 | 4'-6 | 4 | #6 | 4'-9 | 4 | #6 | 5'-0 |
| e3 | ✓ | | | | 2 | #5 | 4'-9 | 3 | #6 | 5'-0 | 3 | ✓ | 5'-6 | 4 | #7 | 5'-6 |
| g | G | 1 | #4 | 13'-6 | 1 | #4 | 14'-6 | 1 | #4 | 15'-6 | 1 | #4 | 16'-6 | 1 | #4 | 17'-6 |
| m | str | 5 | ✓ | 11'-6 | 5 | ✓ | 12'-6 | 5 | ✓ | 13'-6 | 6 | ✓ | 14'-6 | 6 | ✓ | 15'-6 |
| LONG WING | | | | | | | | | | | | | | | | |
| c | A | 1 | #6 | 11'-3 | 1 | #6 | 12'-3 | 1 | #7 | 13'-3 | 1 | #7 | 14'-3 | 1 | #7 | 15'-3 |
| c1 | ✓ | 6 | #5 | 8'-9 | 6 | #5 | 9'-6 | 6 | #5 | 10'-0 | 6 | #5 | 10'-6 | 6 | #6 | 11'-0 |
| c2 | ✓ | 6 | ✓ | 9'-6 | 6 | ✓ | 10'-0 | 6 | #6 | 10'-9 | 6 | #6 | 11'-3 | 6 | ✓ | 11'-9 |
| c3 | ✓ | 6 | ✓ | 10'-0 | 6 | #6 | 10'-9 | 6 | ✓ | 11'-3 | 6 | ✓ | 12'-0 | 6 | #7 | 12'-6 |
| c4 | ✓ | 6 | ✓ | 10'-9 | 6 | ✓ | 11'-6 | 6 | #7 | 12'-0 | 6 | #7 | 12'-9 | 6 | ✓ | 13'-3 |
| c5 | ✓ | 2 | #6 | 11'-3 | 4 | ✓ | 12'-0 | 6 | ✓ | 12'-9 | 6 | ✓ | 13'-6 | 6 | ✓ | 14'-3 |
| c6 | ✓ | | | | | | | | | | 2 | ✓ | 14'-3 | 4 | ✓ | 15'-0 |
| c7 | ✓ | | | | | | | | | | 6 | #5 | 6'-3 | 13 | #5 | 6'-9 |
| c8 | str | 5 | #4 | 7'-3 | 5 | #4 | 8'-0 | 5 | #4 | 8'-6 | 5 | #4 | 9'-0 | 5 | #4 | 9'-6 |
| c9 | ✓ | 5 | ✓ | 8'-0 | 5 | ✓ | 8'-9 | 5 | ✓ | 9'-3 | 5 | ✓ | 10'-0 | 5 | ✓ | 10'-6 |
| c10 | ✓ | 5 | ✓ | 8'-9 | 5 | ✓ | 9'-6 | 5 | ✓ | 10'-3 | 5 | ✓ | 10'-9 | 5 | ✓ | 11'-6 |
| c11 | ✓ | 2 | ✓ | 9'-6 | 4 | ✓ | 10'-3 | 5 | ✓ | 11'-0 | 4 | ✓ | 11'-9 | 5 | ✓ | 12'-6 |
| c12 | ✓ | | | | | | | | | | 2 | ✓ | 12'-6 | 3 | ✓ | 13'-6 |
| d | D | 6 | #4 | 2'-9 | 7 | #4 | 2'-9 | 7 | #4 | 2'-9 | 8 | ✓ | 2'-9 | 9 | ✓ | 2'-9 |
| d1 | str | 2 | #6 | 25'-3 | 2 | #6 | 27'-3 | 2 | #6 | 29'-6 | 2 | #6 | 31'-6 | 2 | #6 | 33'-6 |
| d2 | ✓ | 8 | #4 | 25'-3 | 10 | #4 | 27'-3 | 10 | #4 | 29'-3 | 10 | #4 | 31'-3 | 12 | #4 | 33'-3 |
| d3 | ✓ | 2 | ✓ | 19'-0 | 2 | ✓ | 13'-3 | 2 | ✓ | 21'-0 | 2 | ✓ | 27'-6 | 2 | ✓ | 21'-9 |
| d4 | ✓ | | | | | | | 2 | ✓ | 8'-0 | 2 | ✓ | 15'-6 | 2 | ✓ | 10'-9 |
| f | ✓ | 8 | #4 | 3'-0 | 8 | #4 | 3'-3 | 8 | #4 | 3'-6 | 8 | ✓ | 3'-9 | 8 | ✓ | 4'-0 |
| f1 | ✓ | 8 | ✓ | 3'-3 | 8 | ✓ | 3'-6 | 8 | ✓ | 3'-9 | 8 | ✓ | 4'-3 | 8 | #5 | 4'-6 |
| f2 | ✓ | 8 | ✓ | 3'-9 | 8 | ✓ | 4'-0 | 8 | #5 | 4'-6 | 8 | #5 | 4'-9 | 8 | #6 | 5'-0 |
| f3 | ✓ | 3 | ✓ | 4'-3 | 5 | #5 | 4'-6 | 7 | #6 | 4'-9 | 5 | #6 | 5'-3 | 8 | #7 | 5'-6 |
| f4 | ✓ | | | | | | | | | | 4 | ✓ | 5'-6 | 3 | ✓ | 6'-0 |
| g1 | G1 | 1 | #4 | 30'-9 | 1 | #4 | 33'-0 | 1 | #4 | 35'-3 | 1 | #4 | 37'-3 | 1 | #4 | 39'-6 |
| n | str | 5 | ✓ | 26'-0 | 5 | ✓ | 28'-0 | 5 | ✓ | 30'-0 | 6 | ✓ | 32'-0 | 6 | ✓ | 34'-0 |

NOTE:

See B-01.10 for general notes and miscellaneous details.
See B-07.10 for concrete and steel headwall quantities.

## DIMENSIONS

| Height of Opening | A | B | C | D | E | F | G | K | L | M | N | P |
|---|---|---|---|---|---|---|---|---|---|---|---|---|
| 8' | 11½" | 2'-0 | 1'-6 | 1'-3 | 4'-9 | 12'-0 | 3'-7 | 26'-6 | 3'-2 | 3'-1½ | 6'-1 | 6'-3 |
| 9' | 11½" | 2'-1 | 1'-8 | 1'-6 | 5'-3 | 13'-0 | 4'-2 | 28'-6 | 3'-9 | 3'-3⅞ | 6'-8 | 6'-11 |
| 10' | 11½" | 2'-2 | 1'-10 | 1'-9 | 5'-9 | 14'-0 | 4'-9 | 30'-6 | 4'-3 | 3'-6¼ | 7'-1 | 7'-5 |
| 11' | 11½" | 2'-3 | 2'-0 | 2'-0 | 6'-3 | 15'-0 | 5'-4 | 32'-6 | 4'-10 | 3'-8⅝ | 7'-6 | 7'-11 |
| 12' | 11½" | 2'-4 | 2'-2 | 2'-3 | 6'-9 | 16'-0 | 5'-11 | 34'-6 | 5'-4 | 3'-11 | 7'-10 | 8-4 |

## CURB & CUT-OFF WALL STEEL LIST

| Mark | Bend | 8' Spans | | | | | 10' Spans | | | | | 12' Spans | | | | |
|---|---|---|---|---|---|---|---|---|---|---|---|---|---|---|---|---|
| | | 1 Barrel | | | ○ | ◇ | 1 Barrel | | | ○ | ◇ | 1 Barrel | | | ○ | ◇ |
| | | No | Size | Lgth | No | Lgth | No | Size | Lgth | No | Lgth | No | Size | Lgth | No | Lgth |
| h | str | 4 | #6 | 13'-0 | | 12'-4 | 4 | #7 | 16'-3 | | 15'-4 | 4 | #9 | 19'-3 | | 18'-5 |
| j | J | 9 | #4 | 3'-6 | 8 | | 11 | #4 | 3'-9 | 10 | | 13 | #4 | 4'-3 | 12 | |
| k | K | 6 | ✓ | 7'-0 | 8 | | 8 | ✓ | 7'-0 | 10 | | 9 | ✓ | 7'-0 | 12 | |
| k1 | str | 2 | ✓ | 8'-3 | | 12'-4 | 2 | ✓ | 10'-9 | | 15'-4 | 2 | ✓ | 13'-6 | | 18'-5 |

○ Additional number of bars per each extra barrel.
◇ Additional length of bars per each extra barrel.

| NO. | DESCRIPTION OF REVISIONS | MADE BY | DATE |
|---|---|---|---|
| ① | Stirrups - 12' span, Steel List Title | SEA | 10-74 |
| ② | Wing thickness & curb height | JTW | 7-76 |
| ③ | | | |

| | | | |
|---|---|---|---|
| DESIGN | | CRW, DHY | 8-72 |
| DRAWN | | RWM, JRJ | 8-72 |
| CHECKED | | WT, NAB | 3-73 |

DESIGN APPROVED
R.C. Buchler
APPROVED FOR DISTRIBUTION
R. Sandlin

ARIZONA
DEPARTMENT OF TRANSPORTATION
HIGHWAYS DIVISION
STANDARD PLANS

INLET OR OUTLET WINGS
45° SKEW CULVERT
6:1 SLOPE, HEIGHT 8' TO 12'

REVISION

STANDARD NO. CW6-8
PLAN NO. B-05.80

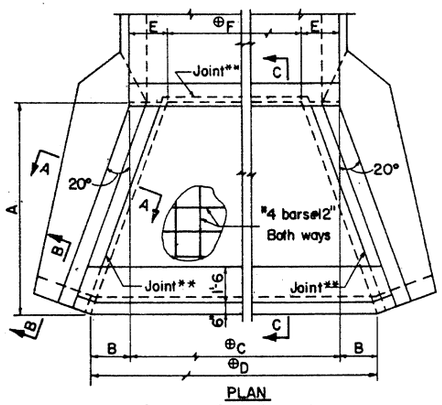


PLAN
Apron for Rt.∢ box culv.

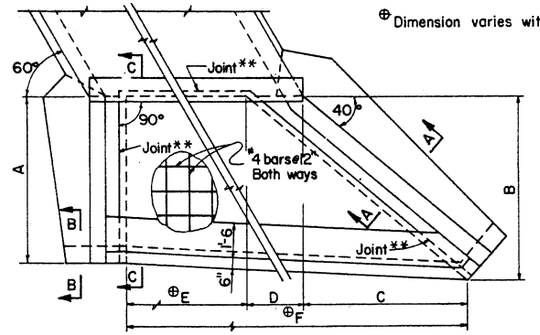


⊕ Dimension varies with number of barrels.

PLAN
Apron for 30° skew box culv.

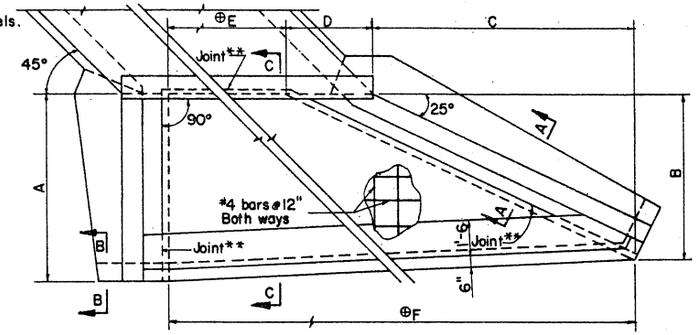


PLAN
Apron for 45° skew box culv.

** Optional construction joint. Apron may be poured with wingwall footings and bottom slab of barrel.

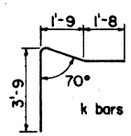


BEND DIAGRAM

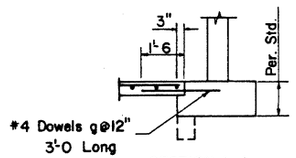


SECTION A-A

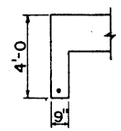


SECTION B-B

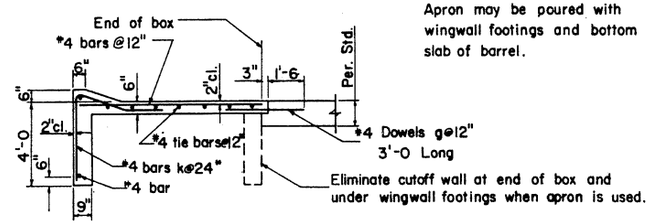


SECTION C-C

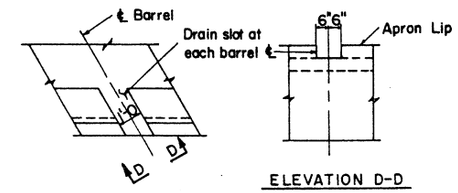


ELEVATION D-D

APRON DRAIN DETAILS

OUTLET APRON QUANTITIES FOR CW2 WINGS

| Span | Hgt. | RT. ANGLE Conc. C.Y. 1 Bbl. | 2 Bbl. | Δc | Steel lbs. 1 Bbl. | 2 Bbl. | Δs | 30° SKEW Conc. C.Y. 1 Bbl. | 2 Bbl. | Δc | Steel lbs. 1 Bbl. | 2 Bbl. | Δs | 45° SKEW Conc. C.Y. 1 Bbl. | 2 Bbl. | Δc | Steel lbs. 1 Bbl. | 2 Bbl. | Δs |
|---|---|---|---|---|---|---|---|---|---|---|---|---|---|---|---|---|---|---|---|
| 6' | 3' | .86 | 1.55 | .69 | 91 | 151 | 60 | 1.27 | 2.07 | .80 | 120 | 189 | 69 | 1.80 | 2.75 | .95 | 145 | 222 | 77 |
| | 4' | 1.04 | 1.84 | .80 | 105 | 179 | 74 | 1.49 | 2.40 | .91 | 136 | 215 | 79 | 2.23 | 3.34 | 1.11 | 178 | 267 | 89 |
| | 5' | 1.23 | 2.14 | .91 | 120 | 202 | 82 | 1.71 | 2.75 | 1.04 | 157 | 241 | 84 | 2.68 | 3.95 | 1.27 | 212 | 313 | 101 |
| | 6' | 1.51 | 2.59 | 1.08 | 147 | 241 | 94 | 1.94 | 3.10 | 1.16 | 180 | 277 | 97 | 3.16 | 4.60 | 1.44 | 251 | 364 | 113 |
| | 7' | 1.81 | 3.07 | 1.26 | 188 | 286 | 98 | 2.19 | 3.48 | 1.29 | 205 | 307 | 102 | 3.67 | 5.27 | 1.60 | 284 | 414 | 130 |
| 8' | 3' | 1.09 | 1.99 | .90 | 111 | 187 | 76 | 1.54 | 2.61 | 1.07 | 137 | 232 | 95 | 2.12 | 3.37 | 1.25 | 171 | 270 | 99 |
| | 4' | 1.31 | 2.37 | 1.06 | 132 | 220 | 88 | 1.79 | 3.01 | 1.22 | 160 | 263 | 103 | 2.59 | 4.06 | 1.47 | 209 | 323 | 114 |
| | 5' | 1.53 | 2.74 | 1.21 | 155 | 253 | 98 | 2.06 | 3.44 | 1.38 | 184 | 300 | 116 | 3.10 | 4.78 | 1.68 | 246 | 377 | 131 |
| | 6' | 1.87 | 3.30 | 1.43 | 184 | 306 | 122 | 2.33 | 3.86 | 1.53 | 210 | 338 | 128 | 3.63 | 5.52 | 1.89 | 284 | 435 | 151 |
| | 7' | 2.22 | 3.89 | 1.67 | 222 | 355 | 133 | 2.61 | 4.32 | 1.71 | 233 | 379 | 146 | 4.20 | 6.30 | 2.10 | 327 | 493 | 166 |
| | 8' | 2.52 | 4.43 | 1.91 | 235 | 383 | 148 | 3.22 | 5.18 | 1.96 | 271 | 435 | 164 | 4.76 | 7.13 | 2.37 | 360 | 544 | 184 |
| 10' | 3' | 1.32 | 2.44 | 1.12 | 131 | 230 | 99 | 1.80 | 3.13 | 1.33 | 159 | 271 | 112 | 2.44 | 4.00 | 1.56 | 193 | 318 | 125 |
| | 4' | 1.58 | 2.89 | 1.31 | 154 | 267 | 113 | 2.10 | 3.61 | 1.51 | 186 | 313 | 127 | 2.97 | 4.79 | 1.82 | 234 | 378 | 144 |
| | 5' | 1.84 | 3.34 | 1.50 | 180 | 302 | 122 | 2.40 | 4.11 | 1.71 | 213 | 351 | 138 | 3.52 | 5.61 | 2.09 | 276 | 440 | 164 |
| | 6' | 2.23 | 4.01 | 1.78 | 219 | 365 | 146 | 2.71 | 4.61 | 1.90 | 237 | 400 | 163 | 4.11 | 6.46 | 2.35 | 322 | 506 | 184 |
| | 7' | 2.64 | 4.70 | 2.06 | 255 | 420 | 165 | 3.05 | 5.17 | 2.12 | 273 | 442 | 169 | 4.72 | 7.33 | 2.61 | 369 | 572 | 203 |
| | 8' | 3.00 | 5.38 | 2.38 | 275 | 451 | 176 | 3.71 | 6.15 | 2.44 | 315 | 503 | 188 | 5.35 | 8.28 | 2.93 | 402 | 631 | 229 |
| | 9' | 3.41 | 6.08 | 2.67 | 314 | 528 | 214 | 4.16 | 6.84 | 2.68 | 344 | 556 | 212 | 6.04 | 9.25 | 3.21 | 449 | 693 | 244 |
| | 10' | 3.86 | 7.82 | 3.96 | 347 | 573 | 226 | 4.64 | 7.55 | 2.91 | 388 | 609 | 221 | 6.75 | 10.23 | 3.48 | 502 | 766 | 264 |
| 12' | 8' | 3.51 | 6.37 | 2.86 | 315 | 535 | 220 | 4.24 | 7.17 | 2.93 | 362 | 594 | 232 | 5.99 | 9.51 | 3.52 | 457 | 721 | 264 |
| | 9' | 3.99 | 7.20 | 3.21 | 359 | 610 | 251 | 4.75 | 7.96 | 3.21 | 392 | 649 | 257 | 6.73 | 10.59 | 3.86 | 503 | 798 | 295 |
| | 10' | 4.50 | 8.06 | 3.56 | 403 | 670 | 267 | 5.27 | 8.76 | 3.49 | 440 | 713 | 273 | 7.50 | 11.68 | 4.18 | 560 | 872 | 312 |
| | 11' | 5.01 | 8.91 | 3.90 | 449 | 751 | 302 | 5.93 | 9.75 | 3.82 | 485 | 780 | 295 | 8.30 | 12.80 | 4.50 | 615 | 953 | 338 |
| | 12' | 5.36 | 9.50 | 4.14 | 481 | 795 | 314 | 6.40 | 10.59 | 4.19 | 532 | 852 | 320 | 9.12 | 13.95 | 4.83 | 668 | 1036 | 368 |

OUTLET APRON QUANTITIES FOR CW6 WINGS

| Span | Hgt. | RT. ANGLE Conc. C.Y. 1 Bbl. | 2 Bbl. | Δc | Steel lbs. 1 Bbl. | 2 Bbl. | Δs | 30° SKEW Conc. C.Y. 1 Bbl. | 2 Bbl. | Δc | Steel lbs. 1 Bbl. | 2 Bbl. | Δs | 45° SKEW Conc. C.Y. 1 Bbl. | 2 Bbl. | Δc | Steel lbs. 1 Bbl. | 2 Bbl. | Δs |
|---|---|---|---|---|---|---|---|---|---|---|---|---|---|---|---|---|---|---|---|
| 6' | 3' | 1.35 | 2.38 | 1.03 | 145 | 231 | 86 | 1.86 | 2.97 | 1.11 | 170 | 261 | 91 | 2.21 | 3.32 | 1.11 | 178 | 268 | 90 |
| | 4' | 1.86 | 3.18 | 1.32 | 192 | 299 | 107 | 2.50 | 3.89 | 1.39 | 224 | 336 | 112 | 2.98 | 4.35 | 1.37 | 231 | 335 | 104 |
| | 5' | 2.57 | 4.24 | 1.67 | 260 | 394 | 134 | 3.24 | 4.92 | 1.68 | 292 | 417 | 125 | 3.85 | 5.48 | 1.63 | 296 | 422 | 126 |
| | 6' | 3.09 | 5.00 | 1.91 | 315 | 456 | 141 | 3.98 | 5.88 | 1.90 | 357 | 500 | 143 | 4.62 | 6.45 | 1.83 | 352 | 493 | 141 |
| | 7' | 3.68 | 5.81 | 2.13 | 358 | 531 | 173 | 4.52 | 6.61 | 2.09 | 393 | 557 | 164 | 5.43 | 7.46 | 2.03 | 412 | 564 | 152 |
| 8' | 3' | 1.69 | 3.05 | 1.36 | 173 | 288 | 115 | 2.23 | 3.69 | 1.46 | 198 | 317 | 119 | 2.57 | 4.04 | 1.47 | 209 | 323 | 114 |
| | 4' | 2.30 | 4.03 | 1.73 | 227 | 367 | 140 | 2.96 | 4.79 | 1.83 | 260 | 405 | 145 | 3.43 | 5.24 | 1.81 | 261 | 401 | 140 |
| | 5' | 3.12 | 5.31 | 2.19 | 303 | 478 | 175 | 3.80 | 6.00 | 2.20 | 332 | 504 | 172 | 4.39 | 6.54 | 2.15 | 339 | 502 | 163 |
| | 6' | 3.72 | 6.23 | 2.51 | 363 | 561 | 198 | 4.60 | 7.12 | 2.52 | 402 | 599 | 197 | 5.22 | 7.63 | 2.41 | 394 | 581 | 187 |
| | 7' | 4.38 | 7.18 | 2.80 | 411 | 637 | 226 | 5.20 | 7.96 | 2.76 | 447 | 659 | 212 | 6.11 | 8.77 | 2.66 | 463 | 660 | 197 |
| | 8' | 4.69 | 7.75 | 3.06 | 445 | 687 | 242 | 5.92 | 8.96 | 3.04 | 504 | 740 | 236 | 6.74 | 9.69 | 2.95 | 519 | 746 | 227 |
| 10' | 3' | 2.03 | 3.72 | 1.69 | 200 | 342 | 142 | 2.60 | 4.41 | 1.81 | 232 | 378 | 146 | 2.94 | 4.76 | 1.82 | 234 | 379 | 145 |
| | 4' | 2.73 | 4.89 | 2.16 | 260 | 429 | 169 | 3.42 | 5.70 | 2.28 | 299 | 480 | 181 | 3.88 | 6.10 | 2.22 | 297 | 466 | 169 |
| | 5' | 3.67 | 6.39 | 2.72 | 345 | 555 | 210 | 4.35 | 7.08 | 2.73 | 380 | 587 | 207 | 4.92 | 7.60 | 2.68 | 376 | 581 | 205 |
| | 6' | 4.35 | 7.45 | 3.10 | 410 | 649 | 239 | 5.24 | 8.12 | 2.88 | 457 | 688 | 231 | 5.82 | 8.81 | 2.99 | 441 | 669 | 228 |
| | 7' | 5.08 | 8.55 | 3.47 | 475 | 736 | 261 | 5.89 | 9.30 | 3.41 | 501 | 766 | 265 | 6.77 | 10.08 | 3.31 | 510 | 757 | 247 |
| | 8' | 5.46 | 9.25 | 3.79 | 499 | 797 | 298 | 6.67 | 10.45 | 3.78 | 565 | 850 | 285 | 7.47 | 11.14 | 3.67 | 577 | 856 | 279 |
| | 9' | 5.83 | 9.82 | 3.99 | 529 | 837 | 308 | 7.37 | 11.42 | 4.05 | 612 | 926 | 314 | 8.24 | 12.18 | 3.94 | 608 | 903 | 295 |
| | 10' | 6.19 | 10.38 | 4.19 | 545 | 860 | 315 | 7.97 | 12.26 | 4.29 | 662 | 987 | 325 | 9.03 | 13.24 | 4.21 | 668 | 974 | 306 |
| 12' | 8' | 6.29 | 10.85 | 4.56 | 565 | 912 | 347 | 7.49 | 12.03 | 4.54 | 628 | 979 | 351 | 8.28 | 12.67 | 4.39 | 632 | 968 | 336 |
| | 9' | 6.69 | 11.48 | 4.79 | 606 | 970 | 364 | 8.25 | 13.12 | 4.87 | 683 | 1060 | 377 | 9.10 | 13.82 | 4.72 | 676 | 1024 | 348 |
| | 10' | 7.10 | 12.13 | 5.03 | 622 | 999 | 377 | 8.90 | 14.05 | 5.15 | 730 | 1123 | 393 | 9.95 | 15.00 | 5.05 | 731 | 1108 | 377 |
| | 11' | 7.52 | 12.78 | 5.26 | 652 | 1046 | 394 | 9.55 | 14.97 | 5.42 | 786 | 1203 | 417 | 10.83 | 16.21 | 5.38 | 794 | 1197 | 403 |
| | 12' | 7.94 | 13.44 | 5.50 | 686 | 1093 | 407 | 10.20 | 15.91 | 5.71 | 833 | 1266 | 433 | 11.74 | 17.44 | 5.70 | 866 | 1277 | 411 |

NOTES:

The apron quantities take into consideration the cutoff walls being omitted along outlet headwall, and shall be used on new box culverts only.

See B-01.10 for general notes and miscellaneous detail.

See B-06.20 for Apron Dimensions.

NOTATIONS:

Δc = Amount of concrete to be added for each additional barrel.

Δs = Amount of steel to be added for each additional barrel.

| NO. | DESCRIPTION OF REVISIONS | MADE BY | DATE |
|---|---|---|---|
| 10-72 | | | |
| 3-73 | | | |
| 3-73 | | | |

| | | |
|---|---|---|
| DESIGN | DRAWN | CHECKED |
| DRY | LAM | MAB |

DESIGN APPROVED R. C. Buechler

APPROVED FOR DISTRIBUTION E. Scandalini

ARIZONA
DEPARTMENT OF TRANSPORTATION
HIGHWAYS DIVISION
STANDARD PLANS

OUTLET APRONS FOR CW2 AND CW6 WINGS

REVISION

STANDARD NO. CWA-1

PLAN NO. B-06.10

## RT. ANGLE OUTLET APRON FOR CW2 WINGS

| Span | Hgt. | Dimensions | | | | | | | | | |
|---|---|---|---|---|---|---|---|---|---|---|---|
| | | A | B | $C_1$ | $C_2$ | $D_1$ | $D_2$ | E | $F_1$ | $F_2$ | Δ |
| 6' | 3' | 5'-2 1/2 | 0'-3 5/8 | 7'-4 | 14'-0 | 7'-11 1/4 | 14'-7 1/4 | 1'-7 1/8 | 4'-1 3/4 | 10'-9 3/4 | 6'-8 |
| | 4' | 6'-1 7/8 | 0'-7 3/4 | 7'-4 | 14'-0 | 8'-7 1/2 | 15'-3 1/2 | 1'-7 1/8 | 4'-1 3/4 | 10'-9 3/4 | 6'-8 |
| | 5' | 7'-1 1/8 | 0'-11 7/8 | 7'-4 | 14'-0 | 9'-3 3/4 | 15'-11 3/4 | 1'-7 1/8 | 4'-1 3/4 | 10'-9 3/4 | 6'-8 |
| | 6' | 8'-6 | 1'-6 | 7'-4 | 14'-0 | 10'-4 | 17'-0 | 1'-7 1/8 | 4'-1 3/4 | 10'-9 3/4 | 6'-8 |
| | 7' | 9'-10 7/8 | 2'-0 1/8 | 7'-4 | 14'-0 | 11'-4 1/4 | 18'-0 1/4 | 1'-7 1/8 | 4'-1 3/4 | 10'-9 3/4 | 6'-8 |
| 8' | 3' | 5'-2 1/2 | 0'-3 5/8 | 9'-6 | 18'-3 | 10'-1 1/4 | 18'-10 1/4 | 1'-7 1/8 | 6'-3 3/4 | 15'-0 3/4 | 8'-9 |
| | 4' | 6'-1 7/8 | 0'-7 3/4 | 9'-6 | 18'-3 | 10'-9 1/2 | 19'-6 1/2 | 1'-7 1/8 | 6'-3 3/4 | 15'-0 3/4 | 8'-9 |
| | 5' | 7'-1 1/8 | 0'-11 7/8 | 9'-6 | 18'-3 | 11'-5 3/4 | 20'-2 3/4 | 1'-7 1/8 | 6'-3 3/4 | 15'-0 3/4 | 8'-9 |
| | 6' | 8'-6 | 1'-6 | 9'-6 | 18'-3 | 12'-6 | 21'-3 | 1'-7 1/8 | 6'-3 3/4 | 15'-0 3/4 | 8'-9 |
| | 7' | 9'-10 7/8 | 2'-0 1/8 | 9'-6 | 18'-3 | 13'-6 1/4 | 22'-3 1/4 | 1'-7 1/8 | 6'-3 3/4 | 15'-0 3/4 | 8'-9 |
| | 8' | 11'-5 7/8 | 2'-0 5/8 | 9'-6 | 18'-3 | 13'-7 1/4 | 22'-4 1/4 | 2'-1 1/2 | 5'-3 | 14'-0 | 8'-9 |
| 10' | 3' | 5'-2 1/2 | 0'-3 5/8 | 11'-8 | 22'-6 | 12'-3 1/4 | 23'-1 1/4 | 1'-7 1/8 | 8'-5 3/4 | 19'-3 3/4 | 10'-10 |
| | 4' | 6'-1 7/8 | 0'-7 3/4 | 11'-8 | 22'-6 | 12'-11 1/2 | 23'-9 1/2 | 1'-7 1/8 | 8'-5 3/4 | 19'-3 3/4 | 10'-10 |
| | 5' | 7'-1 1/8 | 0'-11 7/8 | 11'-8 | 22'-6 | 13'-7 5/8 | 24'-5 3/4 | 1'-7 1/8 | 8'-5 3/4 | 19'-3 3/4 | 10'-10 |
| | 6' | 8'-6 | 1'-6 | 11'-8 | 22'-6 | 14'-8 | 25'-6 | 1'-7 1/8 | 8'-5 3/4 | 19'-3 3/4 | 10'-10 |
| | 7' | 9'-10 7/8 | 2'-0 1/8 | 11'-8 | 22'-6 | 15'-8 1/4 | 26'-6 1/4 | 1'-7 1/8 | 8'-5 3/4 | 19'-3 3/4 | 10'-10 |
| | 8' | 11'-5 7/8 | 2'-0 5/8 | 11'-8 | 22'-6 | 15'-9 1/4 | 26'-7 1/4 | 2'-1 1/2 | 7'-5 | 18'-3 | 10'-10 |
| | 9' | 12'-11 1/8 | 2'-5 7/8 | 11'-8 | 22'-6 | 16'-7 3/4 | 27'-5 3/4 | 2'-2 5/8 | 7'-2 3/4 | 18'-0 3/4 | 10'-10 |
| | 10' | 14'-4 3/8 | 2'-11 1/8 | 11'-8 | 22'-6 | 17'-6 1/4 | 28'-4 1/4 | 2'-3 5/8 | 7'-0 3/4 | 17'-10 3/4 | 10'-10 |
| 12' | 8' | 11'-5 7/8 | 2'-0 5/8 | 14'-0 | 27'-0 | 18'-1 1/4 | 31'-1 1/4 | 2'-1 1/2 | 9'-9 | 22'-9 | 13'-0 |
| | 9' | 12'-11 1/8 | 2'-5 7/8 | 14'-0 | 27'-0 | 18'-11 3/4 | 31'-11 3/4 | 2'-2 5/8 | 9'-6 3/4 | 22'-6 3/4 | 13'-0 |
| | 10' | 14'-4 3/8 | 2'-11 1/8 | 14'-0 | 27'-0 | 19'-10 1/4 | 32'-10 1/4 | 2'-3 3/4 | 9'-4 1/2 | 22'-4 1/2 | 13'-0 |
| | 11' | 15'-9 5/8 | 3'-4 1/4 | 14'-0 | 27'-0 | 20'-8 1/2 | 33'-8 1/2 | 2'-4 3/4 | 9'-2 1/2 | 22'-2 1/2 | 13'-0 |
| | 12' | 16'-9 1/4 | 3'-7 1/2 | 14'-0 | 27'-0 | 21'-3 | 34'-3 | 2'-5 3/4 | 9'-0 1/2 | 22'-0 1/2 | 13'-0 |

## 30° SKEW OUTLET APRON FOR CW2 WINGS

| Span | Hgt. | Dimensions | | | | | | | | |
|---|---|---|---|---|---|---|---|---|---|---|
| | | A | B | C | D | $E_1$ | $E_2$ | $F_1$ | $F_2$ | Δ |
| 6' | 3' | 5'-0 | 5'-7 3/4 | 4'-4 3/4 | 2'-4 | 4'-7 5/8 | 12'-4 | 11'-4 3/8 | 19'-0 3/4 | 7'-8 3/8 |
| | 4' | 6'-0 | 6'-3 1/2 | 5'-2 | 2'-4 | 4'-7 5/8 | 12'-4 | 12'-1 5/8 | 19'-10 | 7'-8 3/8 |
| | 5' | 7'-0 | 6'-11 1/4 | 5'-11 1/8 | 2'-4 | 4'-7 5/8 | 12'-4 | 12'-10 3/4 | 20'-7 1/8 | 7'-8 3/8 |
| | 6' | 8'-0 | 7'-6 7/8 | 6'-8 3/8 | 2'-4 | 4'-7 5/8 | 12'-4 | 13'-8 | 21'-4 3/8 | 7'-8 3/8 |
| | 7' | 9'-0 | 8'-6 1/2 | 7'-5 1/2 | 2'-4 | 4'-7 5/8 | 12'-4 | 14'-5 1/8 | 22'-1 1/2 | 7'-8 3/8 |
| 8' | 3' | 5'-0 | 5'-7 3/4 | 4'-4 3/4 | 2'-4 | 7'-1 5/8 | 17'-2 7/8 | 13'-10 3/8 | 23'-11 5/8 | 10'-1 1/4 |
| | 4' | 6'-0 | 6'-3 1/2 | 5'-2 | 2'-4 | 7'-1 5/8 | 17'-2 7/8 | 14'-7 5/8 | 24'-8 7/8 | 10'-1 1/4 |
| | 5' | 7'-0 | 6'-11 1/4 | 5'-11 1/8 | 2'-4 | 7'-1 5/8 | 17'-2 7/8 | 15'-4 3/4 | 25'-6 | 10'-1 1/4 |
| | 6' | 8'-0 | 7'-6 7/8 | 6'-8 3/8 | 2'-4 | 7'-1 5/8 | 17'-2 7/8 | 16'-2 | 26'-3 1/4 | 10'-1 1/4 |
| | 7' | 9'-0 | 8'-6 1/2 | 7'-5 1/2 | 2'-4 | 7'-1 5/8 | 17'-2 7/8 | 16'-11 1/8 | 27'-0 3/8 | 10'-1 1/4 |
| | 8' | 10'-0 | 10'-2 1/2 | 9'-0 5/8 | 3'-1 3/8 | 6'-4 1/4 | 16'-5 1/2 | 18'-6 1/4 | 28'-7 1/2 | 10'-1 1/4 |
| 10' | 3' | 5'-0 | 5'-7 3/4 | 4'-4 3/4 | 2'-4 | 9'-7 5/8 | 22'-1 3/4 | 16'-4 3/8 | 28'-10 1/2 | 12'-6 1/8 |
| | 4' | 6'-0 | 6'-3 1/2 | 5'-2 | 2'-4 | 9'-7 5/8 | 22'-1 3/4 | 17'-1 5/8 | 29'-7 3/4 | 12'-6 1/8 |
| | 5' | 7'-0 | 6'-11 1/4 | 5'-11 1/8 | 2'-4 | 9'-7 5/8 | 22'-1 3/4 | 17'-10 3/4 | 30'-4 7/8 | 12'-6 1/8 |
| | 6' | 8'-0 | 7'-6 7/8 | 6'-8 3/8 | 2'-4 | 9'-7 5/8 | 22'-1 3/4 | 18'-8 | 31'-2 1/8 | 12'-6 1/8 |
| | 7' | 9'-0 | 8'-6 1/2 | 7'-5 1/2 | 2'-4 | 9'-7 5/8 | 22'-1 3/4 | 19'-5 1/8 | 31'-11 1/4 | 12'-6 1/8 |
| | 8' | 10'-0 | 10'-2 1/2 | 9'-0 5/8 | 3'-1 3/8 | 8'-10 1/4 | 21'-4 3/8 | 21'-0 1/4 | 33'-6 3/8 | 12'-6 1/8 |
| | 9' | 11'-0 | 11'-2 7/8 | 10'-1 3/4 | 3'-2 7/8 | 8'-8 3/4 | 21'-2 7/8 | 22'-1 3/8 | 34'-7 1/2 | 12'-6 1/8 |
| | 10' | 12'-0 | 12'-3 1/4 | 11'-3 | 3'-4 1/2 | 8'-7 1/8 | 21'-1 1/4 | 23'-2 5/8 | 35'-8 3/4 | 12'-6 1/8 |
| 12' | 8' | 10'-0 | 10'-2 1/2 | 9'-0 5/8 | 3'-1 3/8 | 11'-6 5/8 | 26'-6 3/4 | 23'-8 5/8 | 38'-8 3/4 | 15'-0 1/8 |
| | 9' | 11'-0 | 11'-2 7/8 | 10'-1 3/4 | 3'-2 7/8 | 11'-5 1/8 | 26'-5 1/4 | 24'-9 3/4 | 39'-9 7/8 | 15'-0 1/8 |
| | 10' | 12'-0 | 12'-3 1/4 | 11'-3 | 3'-4 1/2 | 11'-3 1/2 | 26'-3 5/8 | 25'-11 | 40'-11 1/8 | 15'-0 1/8 |
| | 11' | 13'-0 | 13'-7 3/8 | 12'-8 3/4 | 3'-6 | 11'-2 | 26'-2 1/8 | 27'-4 3/4 | 42'-4 7/8 | 15'-0 1/8 |
| | 12' | 14'-0 | 14'-7 3/4 | 13'-9 7/8 | 3'-7 1/2 | 11'-0 1/2 | 26'-0 5/8 | 28'-5 7/8 | 43'-6 | 15'-0 1/8 |

## 45° SKEW OUTLET APRON FOR CW2 WINGS

| Span | Hgt. | Dimensions | | | | | | | | |
|---|---|---|---|---|---|---|---|---|---|---|
| | | A | B | C | D | $E_1$ | $E_2$ | $F_1$ | $F_2$ | Δ |
| 6' | 3' | 5'-0 | 5'-2 | 7'-6 1/4 | 3'-6 5/8 | 5'-3 7/8 | 14'-9 | 16'-4 3/4 | 25'-9 7/8 | 9'-5 1/8 |
| | 4' | 6'-0 | 6'-0 1/8 | 9'-4 | 3'-6 5/8 | 5'-3 7/8 | 14'-9 | 18'-2 1/2 | 27'-7 5/8 | 9'-5 1/8 |
| | 5' | 7'-0 | 6'-10 1/4 | 11'-1 3/4 | 3'-6 5/8 | 5'-3 7/8 | 14'-9 | 20'-0 1/4 | 29'-5 3/8 | 9'-5 1/8 |
| | 6' | 8'-0 | 7'-8 3/8 | 12'-11 1/2 | 3'-6 5/8 | 5'-3 7/8 | 14'-9 | 21'-10 | 31'-3 1/8 | 9'-5 1/8 |
| | 7' | 9'-0 | 8'-6 1/2 | 14'-9 1/4 | 3'-6 5/8 | 5'-3 7/8 | 14'-9 | 23'-7 3/4 | 33'-0 7/8 | 9'-5 1/8 |
| 8' | 3' | 5'-0 | 5'-2 | 7'-6 1/4 | 3'-6 5/8 | 8'-4 5/8 | 20'-9 1/8 | 19'-5 1/2 | 31'-10 | 12'-4 1/2 |
| | 4' | 6'-0 | 6'-0 1/8 | 9'-4 | 3'-6 5/8 | 8'-4 5/8 | 20'-9 1/8 | 21'-3 1/4 | 33'-7 3/4 | 12'-4 1/2 |
| | 5' | 7'-0 | 6'-10 1/4 | 11'-1 3/4 | 3'-6 5/8 | 8'-4 5/8 | 20'-9 1/8 | 23'-1 | 35'-5 1/2 | 12'-4 1/2 |
| | 6' | 8'-0 | 7'-8 3/8 | 12'-11 1/2 | 3'-6 5/8 | 8'-4 5/8 | 20'-9 1/8 | 24'-10 3/4 | 37'-3 1/4 | 12'-4 1/2 |
| | 7' | 9'-0 | 8'-6 1/2 | 14'-9 1/4 | 3'-6 5/8 | 8'-4 5/8 | 20'-9 1/8 | 26'-8 1/2 | 39'-1 | 12'-4 1/2 |
| | 8' | 10'-0 | 9'-10 1/8 | 16'-4 1/2 | 4'-8 3/4 | 6'-8 1/2 | 19'-1 | 27'-9 3/4 | 40'-2 1/4 | 12'-4 1/2 |
| 10' | 3' | 5'-0 | 5'-2 | 7'-6 1/4 | 3'-6 5/8 | 11'-5 3/8 | 26'-9 1/4 | 22'-6 1/4 | 37'-10 1/8 | 15'-3 7/8 |
| | 4' | 6'-0 | 6'-0 1/8 | 9'-4 | 3'-6 5/8 | 11'-5 3/8 | 26'-9 1/4 | 24'-4 | 39'-7 7/8 | 15'-3 7/8 |
| | 5' | 7'-0 | 6'-10 1/4 | 11'-1 3/4 | 3'-6 5/8 | 11'-5 3/8 | 26'-9 1/4 | 26'-1 3/4 | 41'-5 5/8 | 15'-3 7/8 |
| | 6' | 8'-0 | 7'-8 3/8 | 12'-11 1/2 | 3'-6 5/8 | 11'-5 3/8 | 26'-9 1/4 | 27'-11 1/2 | 43'-3 3/8 | 15'-3 7/8 |
| | 7 | 9'-0 | 8'-6 1/2 | 14'-9 1/4 | 3'-6 5/8 | 11'-5 3/8 | 26'-9 1/4 | 29'-9 1/4 | 45'-1 1/8 | 15'-3 7/8 |
| | 8' | 10'-0 | 9'-10 1/8 | 16'-4 1/2 | 4'-8 3/4 | 9'-9 1/4 | 25'-1 1/8 | 30'-10 1/2 | 46'-2 3/8 | 15'-3 7/8 |
| | 9' | 11'-0 | 10'-9 1/8 | 18'-1 7/8 | 4'-11 1/8 | 9'-5 7/8 | 24'-9 3/4 | 32'-6 7/8 | 47'-10 3/4 | 15'-3 7/8 |
| | 10' | 12'-0 | 11'-8 1/4 | 19'-11 1/8 | 5'-1 1/2 | 9'-2 1/2 | 24'-6 3/8 | 34'-3 1/8 | 49'-7 | 15'-3 7/8 |
| 12' | 8' | 10'-0 | 9'-10 1/8 | 16'-4 1/2 | 4'-8 3/4 | 13'-0 7/8 | 31'-5 1/2 | 34'-2 1/8 | 52'-6 3/4 | 18'-4 5/8 |
| | 9' | 11'-0 | 10'-9 1/8 | 18'-1 7/8 | 4'-11 1/8 | 12'-9 1/2 | 31'-2 1/8 | 35'-10 1/2 | 54'-3 1/8 | 18'-4 5/8 |
| | 10' | 12'-0 | 11'-8 1/4 | 19'-11 1/8 | 5'-1 1/2 | 12'-6 1/8 | 30'-10 3/4 | 37'-6 3/4 | 55'-11 5/8 | 18'-4 5/8 |
| | 11' | 13'-0 | 12'-7 1/4 | 21'-8 1/2 | 5'-3 7/8 | 12'-2 3/4 | 30'-7 3/8 | 39'-3 1/8 | 57'-7 3/4 | 18'-4 5/8 |
| | 12' | 14'-0 | 13'-6 1/4 | 23'-5 3/4 | 5'-6 1/4 | 11'-11 3/8 | 30-4 | 40'-11 3/8 | 59'-4 | 18-4 5/8 |

## RT. ANGLE OUTLET APRON FOR CW6 WINGS

| Span | Hgt. | Dimensions | | | | | | | | | |
|---|---|---|---|---|---|---|---|---|---|---|---|
| | | A | B | $C_1$ | $C_2$ | $D_1$ | $D_2$ | E | $F_1$ | $F_2$ | Δ |
| 6' | 3' | 8'-0 3/8 | 1'-3 7/8 | 7'-4 | 14'-0 | 9'-11 7/8 | 16'-7 7/8 | 1'-7 1/8 | 4'-1 3/4 | 10'-9 3/4 | 6'-8 |
| | 4' | 10'-4 1/2 | 2'-2 1/8 | 7'-4 | 14'-0 | 11'-8 3/8 | 18'-4 3/8 | 1'-7 1/8 | 4'-1 3/4 | 10'-9 3/4 | 6'-8 |
| | 5' | 13'-2 3/8 | 3'-2 1/2 | 7'-4 | 14'-0 | 13'-9 | 20'-5 | 1'-7 1/8 | 4'-1 3/4 | 10'-9 3/4 | 6'-8 |
| | 6' | 15'-1 | 3'-10 3/4 | 7'-4 | 14'-0 | 15'-1 3/8 | 21'-9 3/8 | 1'-7 1/8 | 4'-1 3/4 | 10'-9 3/4 | 6'-8 |
| | 7' | 16'-11 1/2 | 4'-6 7/8 | 7'-4 | 14'-0 | 16'-5 7/8 | 23'-1 7/8 | 1'-7 1/8 | 4'-1 3/4 | 10'-9 3/4 | 6'-8 |
| 8' | 3' | 8'-0 3/8 | 1'-3 7/8 | 9'-6 | 18'-3 | 12'-1 3/4 | 20'-10 3/4 | 1'-7 1/8 | 6'-3 3/4 | 15'-0 3/4 | 8'-9 |
| | 4' | 10'-4 1/2 | 2'-2 1/8 | 9'-6 | 18'-3 | 13'-10 1/4 | 22'-7 1/4 | 1'-7 1/8 | 6'-3 3/4 | 15'-0 3/4 | 8'-9 |
| | 5' | 13'-2 3/8 | 3'-2 1/2 | 9'-6 | 18'-3 | 15'-11 | 24'-8 | 1'-7 1/8 | 6'-3 3/4 | 15'-0 3/4 | 8'-9 |
| | 6' | 15'-1 | 3'-10 3/4 | 9'-6 | 18'-3 | 17'-3 1/2 | 26'-0 1/2 | 1'-7 1/8 | 6'-3 3/4 | 15'-0 3/4 | 8'-9 |
| | 7' | 16'-11 1/2 | 4'-6 7/8 | 9'-6 | 18'-3 | 18'-7 3/4 | 27'-4 3/4 | 1'-7 1/8 | 6'-3 3/4 | 15'-0 3/4 | 8'-9 |
| | 8' | 18'-6 1/2 | 4'-7 3/4 | 9'-6 | 18'-3 | 18'-8 3/4 | 27'-5 3/4 | 2'-1 1/2 | 5'-3 | 14'-0 | 8'-9 |
| 10' | 3' | 8'-0 3/8 | 1'-3 7/8 | 11'-8 | 22'-6 | 14'-3 3/4 | 25'-1 3/4 | 1'-7 1/8 | 8'-5 3/4 | 19'-3 3/4 | 10'-10 |
| | 4' | 10'-4 1/2 | 2'-2 1/8 | 11'-8 | 22'-6 | 16'-0 1/4 | 26'-10 1/4 | 1'-7 1/8 | 8'-5 3/4 | 19'-3 3/4 | 10'-10 |
| | 5' | 13'-2 3/8 | 3'-2 1/2 | 11'-8 | 22'-6 | 18'-1 | 28'-11 | 1'-7 1/8 | 8'-5 3/4 | 19'-3 3/4 | 10'-10 |
| | 6' | 15'-1 | 3'-10 3/4 | 11'-8 | 22'-6 | 19'-5 1/2 | 30'-3 1/2 | 1'-7 1/8 | 8'-5 3/4 | 19'-3 3/4 | 10'-10 |
| | 7' | 16'-11 1/2 | 4'-6 7/8 | 11'-8 | 22'-6 | 20'-9 3/4 | 31'-7 3/4 | 1'-7 1/8 | 8'-5 3/4 | 19'-3 3/4 | 10'-10 |
| | 8' | 18'-6 1/2 | 4'-7 3/4 | 11'-8 | 22'-6 | 20'-10 3/4 | 31'-8 3/4 | 2'-1 1/2 | 7'-5 | 18'-3 | 10'-10 |
| | 9' | 19'-6 1/8 | 4'-10 5/8 | 11'-8 | 22'-6 | 21'-5 1/4 | 32'-3 1/4 | 2'-2 5/8 | 7'-2 3/4 | 18'-0 3/4 | 10'-10 |
| | 10' | 20'-5 3/4 | 5'-1 3/4 | 11'-8 | 22'-6 | 21'-11 1/2 | 32'-9 1/2 | 2'-3 3/4 | 7'-0 1/2 | 17'-10 1/2 | 10'-10 |
| 12' | 8' | 18'-6 1/2 | 4'-7 3/4 | 14'-0 | 27'-0 | 23'-2 3/4 | 36'-2 3/4 | 2'-1 1/2 | 9'-9 | 22'-9 | 13'-0 |
| | 9' | 19'-6 1/8 | 4'-10 5/8 | 14'-0 | 27'-0 | 23'-9 1/4 | 36'-9 1/4 | 2'-2 5/8 | 9'-6 3/4 | 22'-6 3/4 | 13'-0 |
| | 10' | 20'-5 3/4 | 5'-1 3/4 | 14'-0 | 27'-0 | 24'-3 1/2 | 37'-3 1/2 | 2'-3 3/4 | 9'-4 1/2 | 22'-4 1/2 | 13'-0 |
| | 11' | 21'-5 3/8 | 5'-4 7/8 | 14'-0 | 27'-0 | 24'-9 3/4 | 37'-9 3/8 | 2'-4 3/4 | 9'-2 1/2 | 22'-2 1/2 | 13'-0 |
| | 12' | 22'-5 | 5'-8 1/8 | 14'-0 | 27'-0 | 25'-4 1/4 | 38'-4 1/2 | 2'-5 3/4 | 9'-0 1/2 | 22'-0 1/2 | 13'-0 |

## 30° SKEW OUTLET APRON FOR CW6 WINGS

| Span | Hgt. | Dimensions | | | | | | | | |
|---|---|---|---|---|---|---|---|---|---|---|
| | | A | B | C | D | $E_1$ | $E_2$ | $F_1$ | $F_2$ | Δ |
| 6' | 3' | 7'-0 | 7'-10 3/4 | 7'-1 | 2'-4 | 4'-7 5/8 | 12'-4 | 14'-0 1/2 | 21'-9 | 7'-8 3/8 |
| | 4' | 9'-0 | 9'-9 7/8 | 9'-4 1/2 | 2'-4 | 4'-7 5/8 | 12'-4 | 16'-4 1/8 | 24'-0 1/2 | 7'-8 3/8 |
| | 5' | 11'-0 | 11'-9 | 11'-8 1/8 | 2'-4 | 4'-7 5/8 | 12'-4 | 18'-7 3/4 | 26'-4 1/8 | 7'-8 3/8 |
| | 6' | 12'-6 | 13'-8 1/4 | 13'-11 5/8 | 2'-4 | 4'-7 5/8 | 12'-4 | 20'-11 1/4 | 28'-7 5/8 | 7'-8 3/8 |
| | 7' | 14'-0 | 14'-7 3/4 | 15'-1 1/2 | 2'-4 | 4'-7 5/8 | 12'-4 | 22'-1 1/8 | 29'-9 1/2 | 7'-8 3/8 |
| 8' | 3' | 7'-0 | 7'-10 3/4 | 7'-1 | 2'-4 | 7'-1 5/8 | 17'-2 7/8 | 16'-6 5/8 | 26'-7 7/8 | 10'-1 1/4 |
| | 4' | 9'-0 | 9'-9 7/8 | 9'-4 1/2 | 2'-4 | 7'-1 5/8 | 17'-2 7/8 | 18'-10 1/8 | 28'-11 5/8 | 10'-1 1/4 |
| | 5' | 11'-0 | 11'-9 | 11'-8 1/8 | 2'-4 | 7'-1 5/8 | 17'-2 7/8 | 21'-1 3/4 | 31'-3 | 10'-1 1/4 |
| | 6' | 12'-6 | 13'-8 1/4 | 13'-11 5/8 | 2'-4 | 7'-1 5/8 | 17'-2 7/8 | 23'-5 1/4 | 33'-6 1/2 | 10'-1 1/4 |
| | 7' | 14'-0 | 14'-7 3/4 | 15'-1 1/2 | 2'-4 | 7'-1 5/8 | 17'-2 7/8 | 24'-7 1/8 | 34'-8 3/8 | 10'-1 1/4 |
| | 8' | 15'-6 | 16'-3 3/4 | 16'-4 | 3'-1 3/8 | 6'-4 1/4 | 16'-5 1/2 | 25'-9 5/8 | 35'-10 7/8 | 10'-1 1/4 |
| 10' | 3' | 7'-0 | 7'-10 3/4 | 7'-1 | 2'-4 | 9'-7 5/8 | 22'-1 3/4 | 19'-0 5/8 | 31'-6 3/4 | 12'-6 1/8 |
| | 4' | 9'-0 | 9'-9 7/8 | 9'-4 1/2 | 2'-4 | 9'-7 5/8 | 22'-1 3/4 | 21'-4 1/8 | 33'-10 1/4 | 12'-6 1/8 |
| | 5' | 11'-0 | 11'-9 | 11'-8 1/8 | 2'-4 | 9'-7 5/8 | 22'-1 3/4 | 23'-7 3/4 | 36'-1 7/8 | 12'-6 1/8 |
| | 6' | 12'-6 | 13'-8 1/4 | 13'-11 5/8 | 2'-4 | 9'-7 5/8 | 22'-1 3/4 | 25'-11 1/4 | 37'-5 3/8 | 12'-6 1/8 |
| | 7' | 14'-0 | 14'-7 3/4 | 15'-1 1/2 | 2'-4 | 9'-7 5/8 | 22'-1 3/4 | 27'-1 1/8 | 39'-7 1/4 | 12'-6 1/8 |
| | 8' | 15'-6 | 16'-3 3/4 | 16'-4 | 3'-1 3/8 | 8'-10 1/4 | 21'-4 3/8 | 28'-3 5/8 | 40'-9 3/4 | 12'-6 1/8 |
| | 9' | 16'-6 | 17'-8 | 17'-9 3/4 | 3'-2 7/8 | 8'-8 3/4 | 21'-2 7/8 | 29'-9 3/8 | 42'-3 1/2 | 12'-6 1/8 |
| | 10' | 17'-6 | 18'-8 3/8 | 18'-10 7/8 | 3'-4 1/2 | 8'-7 1/8 | 21'-1 1/4 | 30'-10 1/2 | 43'-4 5/8 | 12'-6 1/8 |
| 12' | 8' | 15'-6 | 16'-3 3/4 | 16'-4 | 3'-1 3/8 | 11'-6 5/8 | 26'-6 3/4 | 31'-0 | 46'-0 1/8 | 15'-0 1/8 |
| | 9' | 16'-6 | 17'-8 | 17'-9 3/4 | 3'-2 7/8 | 11'-5 1/8 | 26'-5 1/4 | 32'-5 3/4 | 47'-5 7/8 | 15'-0 1/8 |
| | 10' | 17'-6 | 18'-8 3/8 | 18'-10 7/8 | 3'-4 1/2 | 11'-3 1/2 | 26'-3 5/8 | 33'-6 7/8 | 48'-7 | 15'-0 1/8 |
| | 11' | 18'-6 | 19'-8 5/8 | 20'-0 | 3'-6 | 11'-2 | 26'-2 1/8 | 34'-8 | 49'-8 1/8 | 15'-0 1/8 |
| | 12' | 19'-6 | 20'-9 | 21'-1 1/8 | 3'-7 1/2 | 11'-0 1/2 | 26'-0 5/8 | 35'-9 1/8 | 50'-9 1/4 | 15'-0 1/8 |

## 45° SKEW OUTLET APRON FOR CW6 WINGS

| Span | Hgt. | Dimensions | | | | | | | | |
|---|---|---|---|---|---|---|---|---|---|---|
| | | A | B | C | D | $E_1$ | $E_2$ | $F_1$ | $F_2$ | Δ |
| 6' | 3' | 6'-0 | 6'-0 1/8 | 9'-4 | 3'-6 5/8 | 5'-3 7/8 | 14'-9 | 18'-2 1/2 | 27'-7 5/8 | 9'-5 1/8 |
| | 4' | 7'-6 | 7'-5 7/8 | 12'-6 1/8 | 3'-6 5/8 | 5'-3 7/8 | 14'-9 | 21'-4 5/8 | 30'-9 3/4 | 9'-5 1/8 |
| | 5' | 9'-0 | 8'-11 5/8 | 15'-8 1/8 | 3'-6 5/8 | 5'-3 7/8 | 14'-9 | 24'-6 5/8 | 33'-11 3/4 | 9'-5 1/8 |
| | 6' | 10'-0 | 10'-2 7/8 | 18'-4 3/4 | 3'-6 5/8 | 5'-3 7/8 | 14'-9 | 27'-3 1/4 | 36'-8 3/8 | 9'-5 1/8 |
| | 7' | 11'-0 | 11'-6 | 21'-1 3/8 | 3'-6 5/8 | 5'-3 7/8 | 14'-9 | 29'-11 7/8 | 39'-5 | 9'-5 1/8 |
| 8' | 3' | 6'-0 | 6'-0 1/8 | 9'-4 | 3'-6 5/8 | 8'-4 5/8 | 20'-9 1/8 | 21'-3 1/4 | 33'-7 3/4 | 12'-4 1/2 |
| | 4' | 7'-6 | 7'-5 7/8 | 12'-6 1/8 | 3'-6 5/8 | 8'-4 5/8 | 20'-9 1/8 | 24'-5 3/8 | 36'-9 7/8 | 12'-4 1/2 |
| | 5' | 9'-0 | 8'-11 5/8 | 15'-8 1/8 | 3'-6 5/8 | 8'-4 5/8 | 20'-9 1/8 | 27'-7 5/8 | 39'-11 7/8 | 12'-4 1/2 |
| | 6' | 10'-0 | 10'-2 7/8 | 18'-4 3/4 | 3'-6 5/8 | 8'-4 5/8 | 20'-9 1/8 | 30'-4 | 42'-8 1/2 | 12'-4 1/2 |
| | 7' | 11'-0 | 11'-6 | 21'-1 3/8 | 3'-6 5/8 | 8'-4 5/8 | 20'-9 1/8 | 33'-0 3/8 | 45'-5 1/8 | 12'-4 1/2 |
| | 8' | 12'-0 | 13'-0 1/8 | 23'-2 1/8 | 4'-8 3/4 | 6'-8 1/2 | 19'-1 | 34'-7 7/8 | 46'-11 7/8 | 12'-4 1/2 |
| 10' | 3' | 6'-0 | 6'-0 1/8 | 9'-4 | 3'-6 5/8 | 11'-5 3/8 | 26'-9 1/4 | 24'-4 | 39'-7 7/8 | 15'-3 7/8 |
| | 4' | 7'-6 | 7'-5 7/8 | 12'-6 1/8 | 3'-6 5/8 | 11'-5 3/8 | 26'-9 1/4 | 27'-6 1/8 | 42'-10 | 15'-3 7/8 |
| | 5' | 9'-0 | 8'-11 5/8 | 15'-8 1/8 | 3'-6 5/8 | 11'-5 3/8 | 26'-9 1/4 | 30'-8 1/8 | 46'-0 | 15'-3 7/8 |
| | 6' | 10'-0 | 10'-2 7/8 | 18'-4 3/4 | 3'-6 5/8 | 11'-5 3/8 | 26'-9 1/4 | 33'-4 3/4 | 48'-8 5/8 | 15'-3 7/8 |
| | 7' | 11'-0 | 11'-6 | 21'-1 3/8 | 3'-6 5/8 | 11'-5 3/8 | 26'-9 1/4 | 36'-1 3/8 | 51'-5 1/4 | 15'-3 7/8 |
| | 8' | 12'-0 | 13'-0 1/8 | 23'-2 1/8 | 4'-8 3/4 | 9'-9 1/4 | 25'-1 1/8 | 37'-8 1/8 | 53'-0 | 15'-3 7/8 |
| | 9' | 13'-0 | 13'-11 1/4 | 24'-11 3/8 | 4'-11 1/8 | 9'-5 7/8 | 24'-9 3/4 | 39'-4 3/8 | 54'-8 1/4 | 15'-3 7/8 |
| | 10' | 14'-0 | 14'-10 1/4 | 26'-8 3/4 | 5'-1 1/2 | 9'-2 1/2 | 24'-6 3/8 | 41'-0 3/4 | 56'-4 3/4 | 15'-3 7/8 |
| 12' | 8' | 12'-0 | 13'-0 1/8 | 23'-2 1/8 | 4'-8 3/4 | 13'-0 7/8 | 31'-5 1/2 | 40'-11 3/4 | 59'-4 5/8 | 18'-4 5/8 |
| | 9' | 13'-0 | 13'-11 1/4 | 24'-11 3/8 | 4'-11 1/8 | 12'-9 1/2 | 31'-2 1/8 | 42'-8 | 61'-0 5/8 | 18'-4 5/8 |
| | 10' | 14'-0 | 14'-10 1/4 | 26'-8 3/4 | 5'-1 1/2 | 12'-6 1/8 | 30'-10 3/4 | 44'-4 3/8 | 62'-9 | 18'-4 5/8 |
| | 11' | 15'-0 | 15'-9 1/4 | 28'-6 | 5'-3 7/8 | 12'-2 3/4 | 30'-7 3/8 | 46'-0 5/8 | 64'-5 1/4 | 18'-4 5/8 |
| | 12' | 16'-0 | 16'-8 3/8 | 30'-3 3/8 | 5'-6 1/4 | 11'-11 3/8 | 30'-4 | 47'-9 | 66'-1 5/8 | 18'-4 5/8 |

NOTES:

See B-06.10 for Details, Quantities and other Notes.

Δ = Length to be added for each additional barrel.

Subscript 1 or 2 indicates number of barrels.

| NO. | DESCRIPTION OF REVISIONS | MADE BY | DATE |
|---|---|---|---|
| 1 | | | |
| 2 | | | |
| 3 | | | |

| | | |
|---|---|---|
| DESIGN | DHY | 10-72 |
| DRAWN | GFB | 3-73 |
| CHECKED | NAB | 3-73 |

Registered Professional Engineer (Civil) CERTIFICATE EXPIRES DEC. 31, 19 ARIZONA, U.S.A.

| DESIGN APPROVED | ARIZONA DEPARTMENT OF TRANSPORTATION HIGHWAYS DIVISION STANDARD PLANS | REVISION |
|---|---|---|
| R.C. Buehler | | |
| APPROVED FOR DISTRIBUTION | OUTLET APRONS FOR CW2 AND CW6 WINGS | STANDARD NO. CWA-2 |
| | | PLAN NO. B-06.20 |

## HEADWALL QUANTITIES FOR CW2 WINGS

| Span | Height | RIGHT ANGLE BARREL | | | | | | 30° SKEW BARREL | | | | | | 45° SKEW BARREL | | | | | |
|---|---|---|---|---|---|---|---|---|---|---|---|---|---|---|---|---|---|---|---|
| | | Concrete (C.Y.) | | | Steel (Lbs.) | | | Concrete (C.Y.) | | | Steel (Lbs.) | | | Concrete (C.Y.) | | | Steel (Lbs.) | | |
| | | 1 Barrel | | | 1 Barrel | | | 1 Barrel | | | 1 Barrel | | | 1 Barrel | | | 1 Barrel | | |
| | | Inlet | Outlet | $\Delta_c$ | Inlet | Outlet | $\Delta_s$ | Inlet | Outlet | $\Delta_c$ | Inlet | Outlet | $\Delta_s$ | Inlet | Outlet | $\Delta_c$ | Inlet | Outlet | $\Delta_s$ |
| 6' | 3' | 3.11 | 2.95 | .86 | 263 | 258 | 77.0 | 3.59 | 3.60 | 1.00 | 300 | 300 | 92.0 | 4.31 | 4.31 | 1.22 | 362 | 362 | 111.9 |
| | 4' | 4.07 | 3.88 | .86 | 322 | 318 | 77.0 | 4.61 | 4.62 | 1.00 | 366 | 366 | 92.0 | 5.56 | 5.56 | 1.22 | 451 | 451 | 111.9 |
| | 5' | 5.24 | 5.01 | .86 | 410 | 397 | 77.0 | 5.82 | 5.82 | 1.00 | 451 | 451 | 92.0 | 7.24 | 7.24 | 1.22 | 555 | 555 | 111.9 |
| | 6' | 6.51 | 6.53 | .86 | 487 | 479 | 77.0 | 7.16 | 7.17 | 1.00 | 529 | 529 | 92.0 | 9.20 | 9.20 | 1.22 | 686 | 686 | 111.9 |
| | 7' | 8.01 | 8.29 | .86 | 568 | 585 | 77.0 | 8.84 | 8.85 | 1.00 | 643 | 643 | 92.0 | 11.22 | 11.22 | 1.22 | 826 | 826 | 111.9 |
| 8' | 3' | 3.37 | 3.21 | 1.13 | 286 | 281 | 106.4 | 3.89 | 3.89 | 1.31 | 328 | 328 | 118.4 | 4.68 | 4.68 | 1.60 | 393 | 393 | 146.7 |
| | 4' | 4.33 | 4.15 | 1.13 | 345 | 341 | 106.4 | 4.91 | 4.91 | 1.31 | 395 | 395 | 118.4 | 6.04 | 6.04 | 1.60 | 482 | 482 | 146.7 |
| | 5' | 5.50 | 5.27 | 1.13 | 433 | 420 | 106.4 | 6.12 | 6.13 | 1.31 | 479 | 479 | 118.4 | 7.63 | 7.63 | 1.60 | 586 | 586 | 146.7 |
| | 6' | 6.78 | 6.80 | 1.13 | 510 | 502 | 106.4 | 7.45 | 7.46 | 1.31 | 558 | 558 | 118.4 | 9.57 | 9.57 | 1.60 | 717 | 717 | 146.7 |
| | 7' | 8.26 | 8.56 | 1.13 | 591 | 608 | 106.4 | 9.15 | 9.16 | 1.31 | 672 | 672 | 118.4 | 11.63 | 11.63 | 1.60 | 857 | 857 | 146.7 |
| | 8' | 12.11 | 12.62 | 1.13 | 696 | 742 | 106.4 | 13.77 | 13.78 | 1.31 | 781 | 781 | 118.4 | 16.71 | 16.71 | 1.60 | 955 | 955 | 146.7 |
| 10' | 3' | 3.70 | 3.53 | 1.40 | 312 | 306 | 129.8 | 4.25 | 4.26 | 1.62 | 363 | 363 | 149.3 | 5.14 | 5.14 | 1.99 | 467 | 467 | 217.7 |
| | 4' | 4.65 | 4.46 | 1.40 | 371 | 367 | 129.8 | 5.27 | 5.28 | 1.62 | 430 | 430 | 149.3 | 6.47 | 6.47 | 1.99 | 556 | 556 | 217.7 |
| | 5' | 5.79 | 5.55 | 1.40 | 458 | 446 | 129.8 | 6.44 | 6.45 | 1.62 | 515 | 515 | 149.3 | 8.02 | 8.02 | 1.99 | 660 | 660 | 217.7 |
| | 6' | 7.07 | 7.10 | 1.40 | 535 | 527 | 129.8 | 7.80 | 7.81 | 1.62 | 593 | 593 | 149.3 | 9.99 | 9.99 | 1.99 | 791 | 791 | 217.7 |
| | 7' | 8.54 | 8.85 | 1.40 | 617 | 634 | 129.8 | 9.48 | 9.49 | 1.62 | 707 | 707 | 149.3 | 12.01 | 12.01 | 1.99 | 932 | 932 | 217.7 |
| | 8' | 12.39 | 12.91 | 1.40 | 716 | 773 | 129.8 | 14.09 | 14.10 | 1.62 | 815 | 815 | 149.3 | 17.11 | 17.11 | 1.99 | 1023 | 1023 | 217.7 |
| | 9' | 14.68 | 15.59 | 1.40 | 856 | 919 | 129.8 | 16.74 | 16.75 | 1.62 | 1020 | 1020 | 149.3 | 20.46 | 20.46 | 1.99 | 1289 | 1289 | 217.7 |
| | 10' | 17.22 | 18.47 | 1.40 | 1062 | 1175 | 129.8 | 19.28 | 19.29 | 1.62 | 1221 | 1221 | 149.3 | 24.08 | 24.08 | 1.99 | 1625 | 1625 | 217.7 |
| 12' | 8' | 12.67 | 13.21 | 1.68 | 748 | 800 | 155.6 | 14.44 | 14.46 | 1.95 | 879 | 879 | 213.1 | 17.54 | 17.54 | 2.38 | 1175 | 1175 | 365.3 |
| | 9' | 14.99 | 15.93 | 1.68 | 888 | 946 | 155.6 | 17.12 | 17.14 | 1.95 | 1083 | 1083 | 213.1 | 20.92 | 20.92 | 2.38 | 1441 | 1441 | 365.3 |
| | 10' | 17.55 | 18.83 | 1.68 | 1094 | 1202 | 155.6 | 19.68 | 19.69 | 1.95 | 1284 | 1284 | 213.1 | 24.56 | 24.56 | 2.38 | 1777 | 1777 | 365.3 |
| | 11' | 20.93 | 22.07 | 1.68 | 1464 | 1513 | 155.6 | 23.13 | 23.14 | 1.95 | 1603 | 1603 | 213.1 | 28.57 | 28.57 | 2.38 | 2054 | 2054 | 365.3 |
| | 12' | 23.98 | 25.04 | 1.68 | 1767 | 1830 | 155.6 | 26.54 | 26.55 | 1.95 | 1915 | 1915 | 213.1 | 32.93 | 32.93 | 2.38 | 2630 | 2630 | 365.3 |

## HEADWALL QUANTITIES FOR CW6 WINGS

| Span | Height | RIGHT ANGLE BARREL | | | | | | 30° SKEW BARREL | | | | | | 45° SKEW BARREL | | | | | |
|---|---|---|---|---|---|---|---|---|---|---|---|---|---|---|---|---|---|---|---|
| | | Concrete (C.Y.) | | | Steel (Lbs.) | | | Concrete (C.Y.) | | | Steel (Lbs.) | | | Concrete (C.Y.) | | | Steel (Lbs.) | | |
| | | 1 Barrel | | | 1 Barrel | | | 1 Barrel | | | 1 Barrel | | | 1 Barrel | | | 1 Barrel | | |
| | | Inlet | Outlet | $\Delta_c$ | Inlet | Outlet | $\Delta_s$ | Inlet | Outlet | $\Delta_c$ | Inlet | Outlet | $\Delta_s$ | Inlet | Outlet | $\Delta_c$ | Inlet | Outlet | $\Delta_s$ |
| 6' | 3' | 4.31 | 4.37 | .86 | 343 | 364 | 77.0 | 4.94 | 4.95 | 1.00 | 396 | 396 | 92.0 | 5.25 | 5.25 | 1.22 | 420 | 420 | 111.9 |
| | 4' | 5.53 | 6.35 | .86 | 433 | 487 | 77.0 | 7.02 | 7.03 | 1.00 | 534 | 534 | 92.0 | 7.54 | 7.54 | 1.22 | 562 | 562 | 111.9 |
| | 5' | 7.05 | 9.08 | .86 | 522 | 688 | 77.0 | 9.61 | 9.62 | 1.00 | 721 | 721 | 92.0 | 10.39 | 10.39 | 1.22 | 729 | 729 | 111.9 |
| | 6' | 9.01 | 11.49 | .86 | 656 | 821 | 77.0 | 12.24 | 12.25 | 1.00 | 868 | 868 | 92.0 | 13.41 | 13.41 | 1.22 | 907 | 907 | 111.9 |
| | 7' | 11.31 | 14.11 | .86 | 783 | 997 | 77.0 | 14.78 | 14.78 | 1.00 | 1037 | 1037 | 92.0 | 16.81 | 16.81 | 1.22 | 1097 | 1097 | 111.9 |
| 8' | 3' | 4.57 | 4.64 | 1.13 | 366 | 387 | 106.4 | 5.24 | 5.25 | 1.31 | 425 | 425 | 118.4 | 5.62 | 5.62 | 1.60 | 451 | 451 | 146.7 |
| | 4' | 5.80 | 6.62 | 1.13 | 456 | 510 | 106.4 | 7.32 | 7.33 | 1.31 | 562 | 562 | 118.4 | 7.92 | 7.92 | 1.60 | 594 | 594 | 146.7 |
| | 5' | 7.33 | 9.36 | 1.13 | 545 | 711 | 106.4 | 9.92 | 9.93 | 1.31 | 749 | 749 | 118.4 | 10.77 | 10.77 | 1.60 | 761 | 761 | 146.7 |
| | 6' | 9.28 | 11.76 | 1.13 | 679 | 844 | 106.4 | 12.54 | 12.55 | 1.31 | 896 | 896 | 118.4 | 13.79 | 13.79 | 1.60 | 939 | 939 | 146.7 |
| | 7' | 11.59 | 14.41 | 1.13 | 805 | 1019 | 106.4 | 15.11 | 15.12 | 1.31 | 1066 | 1066 | 118.4 | 17.22 | 17.22 | 1.60 | 1128 | 1128 | 146.7 |
| | 8' | 17.05 | 20.35 | 1.13 | 942 | 1144 | 106.4 | 21.48 | 21.49 | 1.31 | 1253 | 1253 | 118.4 | 22.62 | 22.62 | 1.60 | 1317 | 1317 | 146.7 |
| 10' | 3' | 4.87 | 4.94 | 1.40 | 392 | 413 | 129.8 | 5.57 | 5.58 | 1.62 | 455 | 455 | 149.3 | 6.02 | 6.02 | 1.99 | 490 | 490 | 217.7 |
| | 4' | 6.10 | 6.91 | 1.40 | 482 | 536 | 129.8 | 7.65 | 7.66 | 1.62 | 593 | 593 | 149.3 | 8.32 | 8.32 | 1.99 | 633 | 633 | 217.7 |
| | 5' | 7.61 | 9.67 | 1.40 | 571 | 737 | 129.8 | 10.26 | 10.27 | 1.62 | 780 | 780 | 149.3 | 11.19 | 11.19 | 1.99 | 800 | 800 | 217.7 |
| | 6' | 9.58 | 12.10 | 1.40 | 705 | 870 | 129.8 | 12.92 | 12.93 | 1.62 | 927 | 927 | 149.3 | 14.23 | 14.23 | 1.99 | 977 | 977 | 217.7 |
| | 7' | 11.89 | 14.72 | 1.40 | 831 | 1045 | 129.8 | 15.46 | 15.47 | 1.62 | 1096 | 1096 | 149.3 | 17.63 | 17.63 | 1.99 | 1167 | 1167 | 217.7 |
| | 8' | 17.34 | 20.68 | 1.40 | 963 | 1174 | 129.8 | 21.84 | 21.85 | 1.62 | 1287 | 1287 | 149.3 | 23.04 | 23.04 | 1.99 | 1390 | 1390 | 217.7 |
| | 9' | 21.24 | 23.66 | 1.40 | 1252 | 1411 | 129.8 | 25.49 | 25.50 | 1.62 | 1539 | 1539 | 149.3 | 26.91 | 26.91 | 1.99 | 1689 | 1689 | 217.7 |
| | 10' | 24.90 | 26.75 | 1.40 | 1615 | 1696 | 129.8 | 29.09 | 29.10 | 1.62 | 1853 | 1853 | 149.3 | 30.96 | 30.96 | 1.99 | 2097 | 2097 | 217.7 |
| 12' | 8' | 17.65 | 21.02 | 1.68 | 994 | 1201 | 155.6 | 22.23 | 22.25 | 1.95 | 1350 | 1350 | 213.1 | 23.49 | 23.49 | 2.38 | 1537 | 1537 | 365.3 |
| | 9' | 21.58 | 24.04 | 1.68 | 1283 | 1439 | 155.6 | 25.92 | 25.93 | 1.95 | 1602 | 1602 | 213.1 | 27.40 | 27.40 | 2.38 | 1836 | 1836 | 365.3 |
| | 10' | 25.25 | 27.15 | 1.68 | 1647 | 1723 | 155.6 | 29.53 | 29.54 | 1.95 | 1916 | 1916 | 213.1 | 31.47 | 31.47 | 2.38 | 2244 | 2244 | 365.3 |
| | 11' | 29.24 | 30.51 | 1.68 | 2070 | 1973 | 155.6 | 33.09 | 33.10 | 1.95 | 2307 | 2307 | 213.1 | 35.88 | 35.88 | 2.38 | 2634 | 2634 | 365.3 |
| | 12' | 33.40 | 33.99 | 1.68 | 2389 | 2335 | 155.6 | 36.75 | 36.76 | 1.95 | 2647 | 2647 | 213.1 | 40.54 | 40.54 | 2.38 | 3222 | 3222 | 365.3 |

NOTE:

All quantities are for headwalls of barrels shown in Table No. I (0-10' Fill).

Quantities are shown for single barrel culvert only. Multi-barrel culvert headwall quantities are obtained by adding, for each additional barrel, $\Delta s$ and $\Delta c$ to the inlet and outlet quantities.

NOTATIONS:

$\Delta c$ = Inlet or outlet concrete quantity per additional barrel.

$\Delta s$ = Inlet or outlet steel quantity per additional barrel.

| NO. | DESCRIPTION OF REVISIONS | MADE BY | DATE |
|---|---|---|---|
| 1 | Concrete quantities for H=8' & over | JTW | 7-76 |
| 2 | $\Delta c$ & $\Delta s$ for 6" curb | JTW | 8-76 |
| 3 | | | |

| | | |
|---|---|---|
| DESIGN | DHY | 9-72 |
| DRAWN | FDL | 9-72 |
| CHECKED | APJ | 9-72 |

DESIGN APPROVED: R.C. Buchler

APPROVED FOR DISTRIBUTION: R. Ridenour

ARIZONA
DEPARTMENT OF TRANSPORTATION
HIGHWAYS DIVISION
STANDARD PLANS

HEADWALL QUANTITIES FOR CW2 AND CW6 WINGS

REVISION

STANDARD NO. CWQ-1

PLAN NO. B-07.10

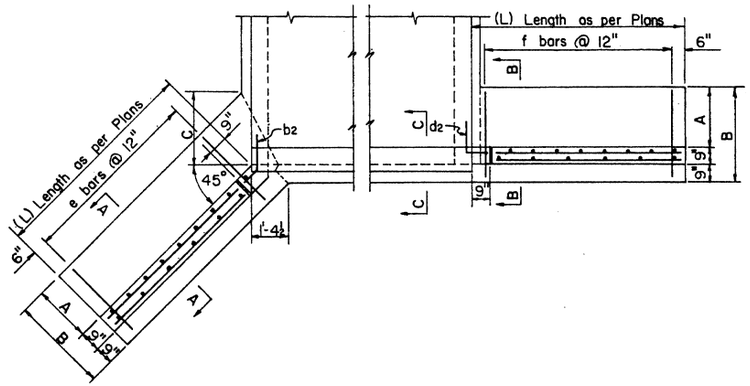


TYPE A WING

TYPE B WING

HEADWALL PLAN

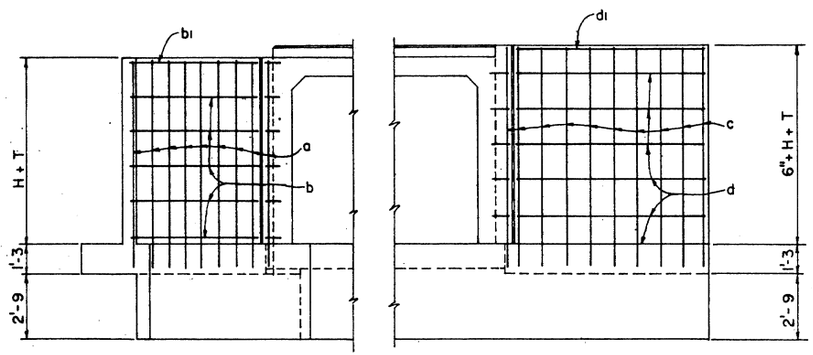


TYPE A WING

TYPE B WING

ELEVATION (Back Face Reinf.)

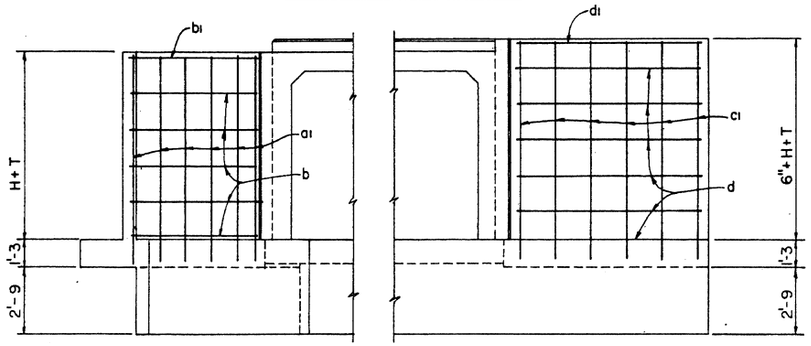


TYPE A WING

TYPE B WING

ELEVATION (Front Face Reinf.)

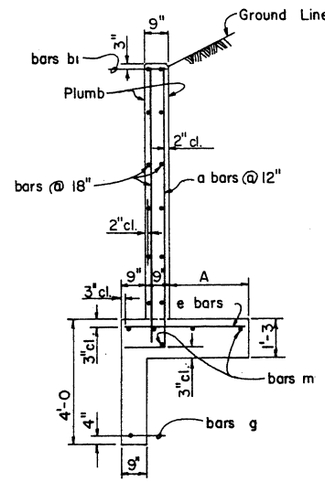


SECTION A-A

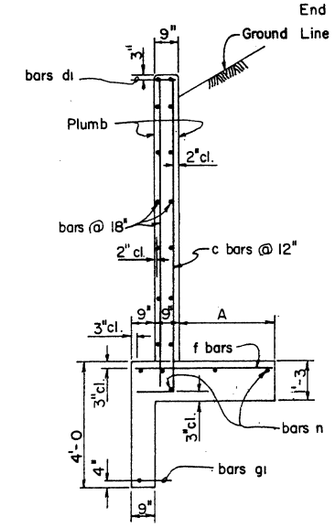


SECTION B-B

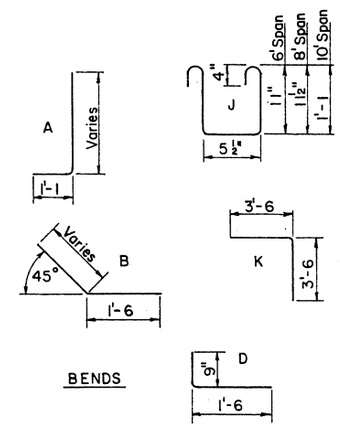


BENDS

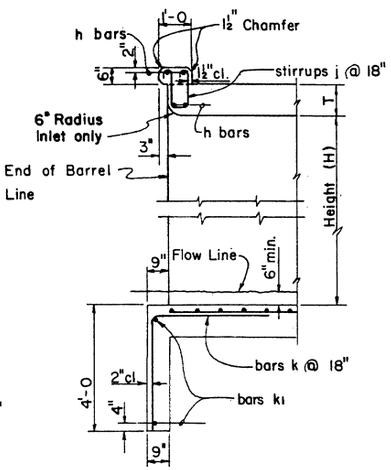


SECTION C-C

DIMENSIONS

| Height of Opening | A | B | C |
|---|---|---|---|
| 3' | 1'-6 | 3'-0 | 1'-9 |
| 4' | 2'-0 | 3'-6 | 2'-6 |
| 5' | 2'-6 | 4'-0 | 3'-2 |
| 6' | 3'-0 | 4'-6 | 3'-11 |
| 7' | 3'-3 | 4'-9 | 4'-3 |

WINGS STEEL LIST (L=H+2)

| Mark | Bend | 3' Height | | | 4' Height | | | 5' Height | | | 6' Height | | | 7' Height | | |
|---|---|---|---|---|---|---|---|---|---|---|---|---|---|---|---|---|
| | | No. | Size | Lgth. | No. | Size | Lgth. | No. | Size | Lgth. | No. | Size | Lgth. | No. | Size | Lgth. |
| TYPE A WING | | | | | | | | | | | | | | | | |
| a | A | 12 | #5 | 5'-6 | 14 | #5 | 6'-6 | 16 | #5 | 7'-6 | 18 | #6 | 8'-6 | 20 | #7 | 9'-6 |
| a1 | str. | 8 | #4 | 4'-6 | 8 | #4 | 5'-6 | 8 | #4 | 6'-6 | 10 | #4 | 7'-6 | 10 | #4 | 8'-6 |
| b | ⌐ | 8 | ✓ | 4'-0 | 12 | ✓ | 5'-0 | 12 | ✓ | 6'-0 | 16 | ✓ | 7'-0 | 20 | ✓ | 8'-0 |
| b1 | ⌐ | 4 | #6 | 4'-0 | 4 | #6 | 5'-0 | 4 | #6 | 6'-0 | 4 | #6 | 7'-0 | 4 | #6 | 8'-0 |
| b2 | B | 6 | #4 | 2'-3 | 8 | #4 | 2'-3 | 8 | #4 | 2'-3 | 10 | #4 | 2'-3 | 12 | #4 | 2'-3 |
| e | str. | 12 | #5 | 2'-6 | 14 | #5 | 3'-0 | 16 | #5 | 3'-6 | 18 | #5 | 4'-0 | 20 | #5 | 4'-3 |
| g | B | 2 | #4 | 6'-9 | 2 | #4 | 7'-9 | 2 | #4 | 8'-9 | 2 | #4 | 9'-9 | 2 | #4 | 10'-9 |
| m | str. | 8 | ✓ | 5'-0 | 8 | ✓ | 6'-0 | 10 | ✓ | 7'-0 | 10 | ✓ | 8'-0 | 10 | ✓ | 9'-0 |
| TYPE B WING | | | | | | | | | | | | | | | | |
| c | A | 12 | #5 | 6'-0 | 14 | #5 | 7'-0 | 16 | #5 | 8'-0 | 18 | #6 | 9'-0 | 20 | #7 | 10'-0 |
| c1 | str. | 8 | #4 | 5'-0 | 8 | #4 | 6'-0 | 8 | #4 | 7'-0 | 10 | #4 | 8'-0 | 10 | #4 | 9'-0 |
| d | ⌐ | 8 | ✓ | 4'-0 | 12 | ✓ | 5'-0 | 12 | ✓ | 6'-0 | 16 | ✓ | 7'-0 | 20 | ✓ | 8'-0 |
| d1 | ⌐ | 4 | #6 | 4'-0 | 4 | #6 | 5'-0 | 4 | #6 | 6'-0 | 4 | #6 | 7'-0 | 4 | #6 | 8'-0 |
| d2 | D | 6 | #4 | 2'-3 | 8 | #4 | 2'-3 | 8 | #4 | 2'-3 | 10 | #4 | 2'-3 | 12 | #4 | 2'-3 |
| f | str. | 10 | #5 | 2'-6 | 12 | #5 | 3'-0 | 14 | #5 | 3'-6 | 16 | #5 | 4'-0 | 18 | #5 | 4'-3 |
| g1 | ⌐ | 2 | #4 | 6'-3 | 2 | #4 | 7'-3 | 2 | #4 | 8'-3 | 2 | #4 | 9'-3 | 2 | #4 | 10'-3 |
| n | ⌐ | 8 | ✓ | 5'-0 | 8 | ✓ | 6'-0 | 10 | ✓ | 7'-0 | 10 | ✓ | 8'-0 | 10 | ✓ | 9'-0 |

CURB & CUT-OFF WALL STEEL LIST

| Mark | Bend | Size | 6' Spans | | | | 8' Spans | | | | 10' Spans | | | |
|---|---|---|---|---|---|---|---|---|---|---|---|---|---|---|
| | | | 1 Barrel | | ○ | ◇ | 1 Barrel | | ○ | ◇ | 1 Barrel | | ○ | ◇ |
| | | | No. | Lgth. | No. | Lgth. | No. | Lgth. | No. | Lgth. | No. | Lgth. | No. | Lgth. |
| TYPE A WING | | | | | | | | | | | | | | |
| h | str. | #6 | 4 | 7'-0 | | 6'-8 | 4 | 9'-0 | | 8'-9 | 4 | 11'-3 | | 10'-10 |
| j | J | #4 | 6 | 3'-6 | 4 | | 7 | 3'-6 | 6 | | 8 | 3'-9 | 7 | |
| k | K | ✓ | 4 | 7'-0 | 4 | | 5 | 7'-0 | 6 | | 6 | 7'-0 | 7 | |
| k1 | str. | ✓ | 2 | 4'-6 | | 6'-8 | 2 | 6'-9 | | 8'-9 | 2 | 9'-0 | | 10'-10 |
| TYPE B WING | | | | | | | | | | | | | | |
| h | str. | #6 | 4 | 7'-0 | | 6'-8 | 4 | 9'-0 | | 8'-9 | 4 | 11'-3 | | 10'-10 |
| j | J | #4 | 6 | 3'-6 | 4 | | 7 | 3'-6 | 6 | | 9 | 3'-9 | 7 | |
| k | K | ✓ | 5 | 7'-0 | 4 | | 7 | 7'-0 | 6 | | 9 | 7'-0 | 7 | |
| k1 | str. | ✓ | 2 | 7'-3 | | 6'-8 | 2 | 9'-3 | | 8'-9 | 2 | 11'-6 | | 10'-10 |

○ Additional number of bars per each extra barrel.

◇ Additional length of bars per each extra barrel.

APPROXIMATE HEADWALL QUANTITIES *

| Span | Height | Hdwl. Type A Wings | | | | Hdwl. Type B Wings | | | |
|---|---|---|---|---|---|---|---|---|---|
| | | For L=H+2' | | Per each Add. Ft. | | For L=H+2' | | Per each Add. Ft. | |
| | | Conc. | Steel | Conc. | Steel | Conc. | Steel | Conc. | Steel |
| 6' | 3' | 4.18 | 297 | .3146 | 19 | 4.32 | 308 | .3310 | 20 |
| | 4' | 5.52 | 375 | .3655 | 23 | 5.60 | 382 | .3819 | 23 |
| | 5' | 7.07 | 456 | .4164 | 25 | 7.07 | 467 | .4329 | 26 |
| | 6' | 8.86 | 636 | .4673 | 33 | 8.75 | 652 | .4838 | 34 |
| | 7' | 10.58 | 864 | .5067 | 41 | 10.43 | 886 | .5231 | 43 |
| 8' | 3' | 4.47 | 319 | .3157 | 19 | 4.61 | 336 | .3322 | 20 |
| | 4' | 5.80 | 397 | .3666 | 23 | 5.88 | 409 | .3831 | 23 |
| | 5' | 7.35 | 477 | .4176 | 25 | 7.37 | 494 | .4340 | 26 |
| | 6' | 9.14 | 658 | .4685 | 33 | 9.04 | 679 | .4849 | 34 |
| | 7' | 10.88 | 886 | .5090 | 41 | 10.75 | 913 | .5255 | 43 |
| 10' | 3' | 4.81 | 344 | .3180 | 19 | 4.94 | 368 | .3345 | 20 |
| | 4' | 6.13 | 423 | .3640 | 23 | 6.21 | 441 | .3854 | 23 |
| | 5' | 7.66 | 503 | .4210 | 25 | 7.69 | 527 | .4375 | 26 |
| | 6' | 9.46 | 683 | .4731 | 33 | 9.39 | 712 | .4896 | 34 |
| | 7' | 11.19 | 911 | .5125 | 41 | 11.09 | 946 | .5290 | 43 |

* Includes curb and cut-off wall quantities for a single barrel.

CURB & CUT-OFF WALL QUANTITIES PER EACH ADDITIONAL BARREL

| 6' Spans | | 8' Spans | | 10' Spans | |
|---|---|---|---|---|---|
| Conc. | Steel | Conc. | Steel | Conc. | Steel |
| .859 | 76 | 1.114 | 103 | 1.370 | 130 |

NOTE:

See B-01.10 for general notes and miscellaneous details.

| DESIGN | | DRAWN | | CHECKED | |
|---|---|---|---|---|---|
| DWY | 8-72 | APJ | 9-72 | MAB | 9-72 |

| NO. | DESCRIPTION OF REVISIONS | MADE BY | DATE |
|---|---|---|---|
| 1 | Curb height now 6" | JTW | 7-76 |
| 2 | | | |
| 3 | | | |

DESIGN APPROVED R.C. Brechler

APPROVED FOR DISTRIBUTION

ARIZONA
DEPARTMENT OF TRANSPORTATION
HIGHWAYS DIVISION
STANDARD PLANS

INLET OR OUTLET
LEVEL WINGS,
HEIGHT 3' TO 7'

REVISION

STANDARD NO. CWL-1

PLAN NO. B-08.10

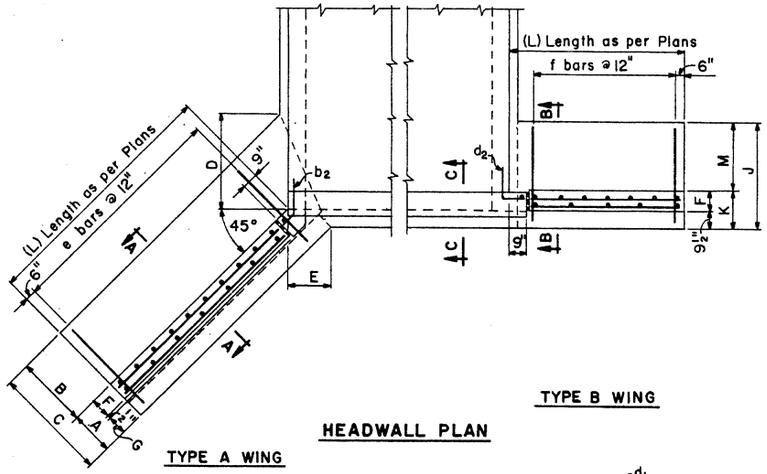


HEADWALL PLAN

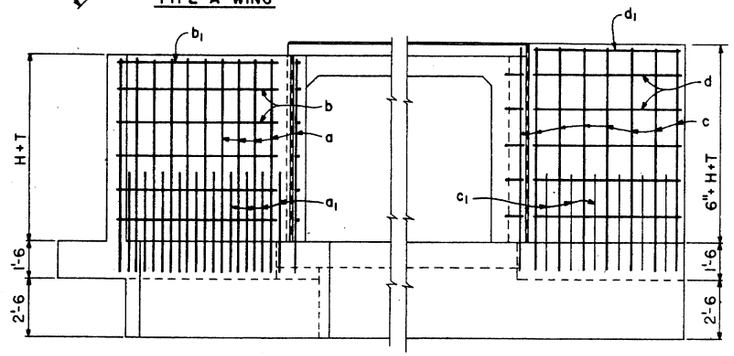


TYPE A WING (Back Face Reinf.)

TYPE B WING (Back Face Reinf.)

ELEVATION

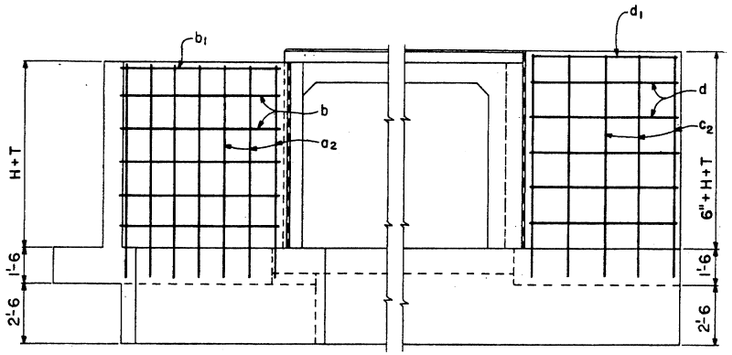


TYPE A WING (Front Face Reinf.)

TYPE B WING (Front Face Reinf.)

ELEVATION

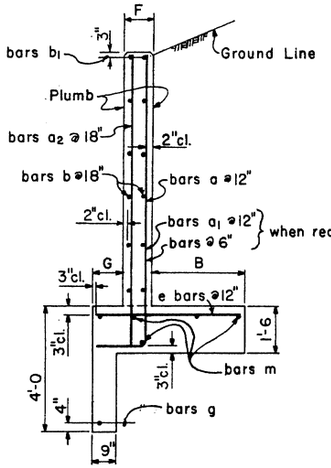


SECTION A-A

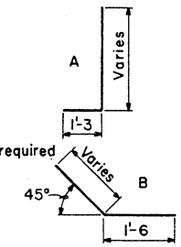


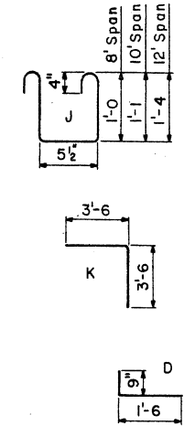


BENDS

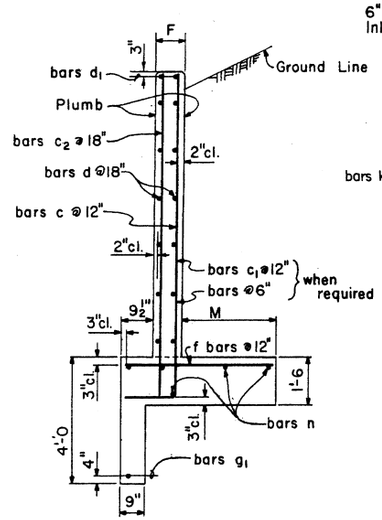


SECTION B-B

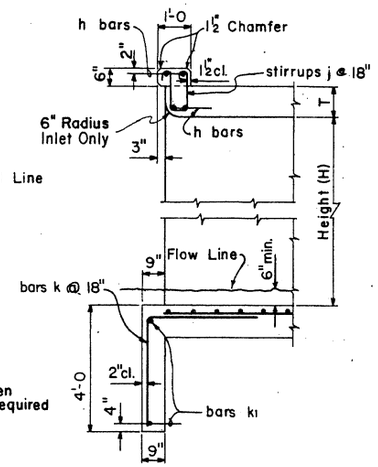


SECTION C-C

## WINGS STEEL LIST (L=H+2')

| Mark | Bend | 8' Height | | | 9' Height | | | 10' Height | | | 11' Height | | | 12' Height | | |
|---|---|---|---|---|---|---|---|---|---|---|---|---|---|---|---|---|
| | | No. | Size | Lgth. | No. | Size | Lgth. | No. | Size | Lgth. | No. | Size | Lgth. | No. | Size | Lgth. |
| TYPE A WING | | | | | | | | | | | | | | | | |
| a | A | 20 | #7 | 11'-0 | 22 | #8 | 12'-3 | 24 | #6 | 13'-3 | 26 | #7 | 14'-3 | 28 | #7 | 15'-3 |
| $a_1$ | A | | | | | | | 24 | #6 | 6'-6 | 26 | #7 | 6'-9 | 28 | #7 | 7'-0 |
| $a_2$ | str. | 14 | #4 | 9'-9 | 14 | #4 | 11'-0 | 16 | #4 | 12'-0 | 18 | #4 | 13'-0 | 18 | #4 | 14'-0 |
| b | ⌐ | 20 | #4 | 9'-0 | 24 | #4 | 10'-0 | 28 | #4 | 11'-0 | 28 | #4 | 12'-0 | 32 | #4 | 13'-0 |
| $b_1$ | ⌐ | 4 | #6 | 9'-0 | 4 | #6 | 10'-0 | 4 | #6 | 11'-0 | 4 | #6 | 12'-0 | 4 | #6 | 13'-0 |
| $b_2$ | B | 12 | #4 | 2'-3 | 14 | #4 | 2'-3 | 16 | #4 | 2'-3 | 16 | #4 | 2'-3 | 18 | #4 | 2'-3 |
| e | str. | 20 | #5 | 5'-0 | 22 | #6 | 5'-6 | 24 | #7 | 6'-0 | 26 | #7 | 6'-6 | 28 | #8 | 6'-9 |
| g | B | 2 | #4 | 12'-3 | 2 | #4 | 13'-9 | 2 | #4 | 14'-9 | 2 | #4 | 16'-0 | 2 | #4 | 17'-0 |
| m | str. | 10 | #4 | 9'-6 | 10 | #4 | 10'-6 | 10 | #4 | 11'-6 | 10 | #4 | 12'-6 | 10 | #4 | 13'-6 |
| TYPE B WING | | | | | | | | | | | | | | | | |
| c | A | 20 | #7 | 11'-6 | 22 | #8 | 12'-9 | 24 | #6 | 13'-9 | 26 | #7 | 14'-9 | 28 | #7 | 15'-9 |
| $c_1$ | ⌐ | | | | | | | 24 | #6 | 6'-6 | 26 | #7 | 6'-9 | 28 | #7 | 7'-0 |
| $c_2$ | str. | 14 | #4 | 10'-3 | 14 | #4 | 11'-6 | 16 | #4 | 12'-6 | 18 | #4 | 13'-6 | 18 | #4 | 14'-6 |
| d | ⌐ | 24 | #4 | 9'-0 | 28 | #4 | 10'-0 | 28 | #4 | 11'-0 | 32 | #4 | 12'-0 | 36 | #4 | 13'-0 |
| $d_1$ | ⌐ | 4 | #6 | 9'-0 | 4 | #6 | 10'-0 | 4 | #6 | 11'-0 | 4 | #6 | 12'-0 | 4 | #6 | 13'-0 |
| $d_2$ | D | 14 | #4 | 2'-3 | 16 | #4 | 2'-3 | 16 | #4 | 2'-3 | 18 | #4 | 2'-3 | 20 | #4 | 2'-3 |
| f | str. | 20 | #5 | 5'-0 | 22 | #6 | 5'-6 | 24 | #7 | 6'-0 | 26 | #7 | 6'-6 | 28 | #9 | 7'-6 |
| $g_1$ | ⌐ | 2 | #4 | 11'-3 | 2 | #4 | 12'-3 | 2 | #4 | 13'-3 | 2 | #4 | 14'-3 | 2 | #4 | 15'-3 |
| n | ⌐ | 10 | #4 | 9'-6 | 10 | #4 | 10'-6 | 10 | #4 | 11'-6 | 10 | #4 | 12'-6 | 10 | #4 | 13'-6 |

## CURB & CUT-OFF WALL STEEL LIST

| Mark | Bend | Size | 8' Spans | | | | 10' Spans | | | | 12' Spans | | | |
|---|---|---|---|---|---|---|---|---|---|---|---|---|---|---|
| | | | 1 Barrel | | ○ | ◇ | 1 Barrel | | ○ | ◇ | 1 Barrel | | ○ | ◇ |
| | | | No. | Lgth. | No. | Lgth. | No. | Lgth. | No. | Lgth. | No. | Lgth. | No. | Lgth. |
| TYPE A WING | | | | | | | | | | | | | | |
| h | str. | #6 | 4 | 9'-0 | | 8'-9 | 4 | 11'-3 | | 10'-10 | 4 | 13'-6 | | 13'-0 |
| j | J | #4 | 7 | 3'-6 | 5 | | 8 | 3'-9 | 7 | | 9 | 4'-3 | 8 | |
| k | K | ⌐ | 4 | 7'-0 | 6 | | 6 | 7'-0 | 7 | | 7 | 7'-0 | 8 | |
| $k_1$ | str. | ⌐ | 2 | 5'-9 | | 8'-9 | 2 | 7'-6 | | 10'-10 | 2 | 8'-3 | | 13'-0 |
| TYPE B WING | | | | | | | | | | | | | | |
| h | str. | #6 | 4 | 10'-6 | | 8'-9 | 4 | 12'-9 | | 10'-10 | 4 | 15'-0 | | 13'-0 |
| j | J | #4 | 7 | 3'-6 | 6 | | 9 | 3'-9 | 7 | | 10 | 4'-3 | 8 | |
| k | K | ⌐ | 7 | 7'-0 | 6 | | 9 | 7'-0 | 7 | | 10 | 7'-0 | 8 | |
| $k_1$ | str. | ⌐ | 2 | 9'-6 | | 8'-9 | 2 | 11'-6 | | 10'-10 | 2 | 13'-6 | | 13'-0 |

○ Additional number of bars per. ea. extra barrel.
◇ Additional length of bars per. ea. extra barrel.

## CURB & CUT-OFF WALL QUANTITIES PER EACH ADDITIONAL BARREL

| 8' Spans | | 10' Spans | | 12' Spans | |
|---|---|---|---|---|---|
| Conc. | Steel | Conc. | Steel | Conc. | Steel |
| 1.114 | 103 | 1.370 | 130 | 1.625 | 155 |

## APPROXIMATE HEADWALL QUANTITIES *

| Span | Height | Hdwl. Type A Wings | | | | Hdwl. Type B Wings | | | |
|---|---|---|---|---|---|---|---|---|---|
| | | For L=H+2' | | Per each Add. Ft. | | For L=H+2' | | Per each Add. Ft. | |
| | | Conc. | Steel | Conc. | Steel | Conc. | Steel | Conc. | Steel |
| 8' | 8' | 15.07 | 1017 | .682 | 46 | 15.05 | 1095 | .703 | 49 |
| 10' | 8' | 15.44 | 1045 | .690 | 46 | 15.41 | 1128 | .707 | 49 |
| | 9' | 18.30 | 1462 | .753 | 61 | 18.18 | 1556 | .771 | 63 |
| | 10' | 21.49 | 1655 | .817 | 64 | 21.20 | 1708 | .835 | 65 |
| 12' | 8' | 15.78 | 1071 | .696 | 46 | 15.80 | 1155 | .714 | 49 |
| | 9' | 18.67 | 1488 | .759 | 61 | 18.59 | 1582 | .777 | 63 |
| | 10' | 21.86 | 1680 | .822 | 64 | 21.61 | 1734 | .840 | 65 |
| | 11' | 25.95 | 2197 | .663 | 78 | 25.61 | 2295 | .922 | 81 |
| | 12' | 30.03 | 2596 | 1.015 | 87 | 30.86 | 2908 | 1.035 | 98 |

* Includes curb and cut-off wall quantities for a single barrel.

NOTE:
See B-01.10 for general notes and miscellaneous details.

## DIMENSIONS

| Height of Opening | A | B | C | D | E | F | G | J | K | M |
|---|---|---|---|---|---|---|---|---|---|---|
| 8' | 1'-9 | 3'-9 | 5'-6 | 5'-0 | 1'-8¾ | 11½ | 0'-9 | 5'-6 | 1'-9 | 3'-9 |
| 9' | 2'-0 | 4'-0 | 6'-0 | 5'-4 | 2'-1 | 11½ | 1'-0 | 6'-0 | 1'-9 | 4'-3 |
| 10' | 2'-0 | 4'-6 | 6'-6 | 6'-0 | 2'-1 | 11½ | 1'-0 | 6'-6 | 1'-9 | 4'-9 |
| 11' | 2'-4 | 4'-8 | 7'-0 | 6'-3 | 2'-6⅝ | 1'-0½ | 1'-3 | 7'-0 | 1'-10 | 5'-2 |
| 12' | 2'-6 | 4'-9 | 7'-3 | 6'-5 | 2'-9⅜ | 1'-1½ | 1'-4 | 8'-0 | 1'-11 | 6'-1 |

| DESIGN | WT, DHY | 8-72 |
|---|---|---|
| DRAWN | KDM, APJ | 8-72 |
| CHECKED | NAB, APJ | 3-73 |

| NO. | DESCRIPTION OF REVISIONS | MADE BY | DATE |
|---|---|---|---|
| 1 | Wing thickness & curb height | JTW | 7-76 |
| 2 | | | |
| 3 | | | |

DESIGN APPROVED R.C. Brechler

APPROVED FOR DISTRIBUTION R.J. Smalley

ARIZONA DEPARTMENT OF TRANSPORTATION
HIGHWAYS DIVISION
STANDARD PLANS

INLET OR OUTLET
LEVEL WINGS,
HEIGHT 8' TO 12'

REVISION

STANDARD NO. CWL-2

PLAN NO. B-08.20

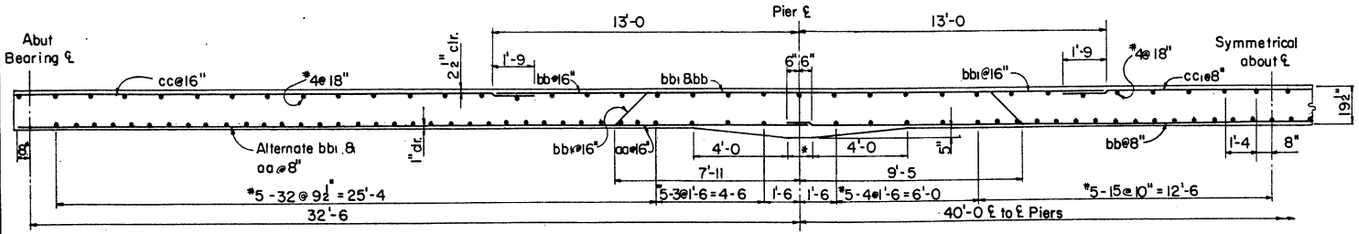


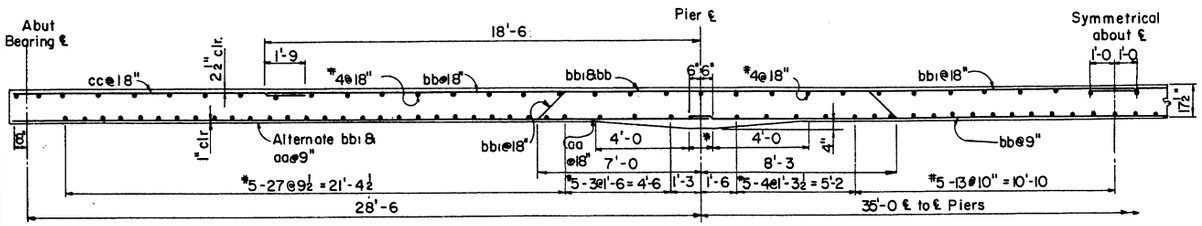


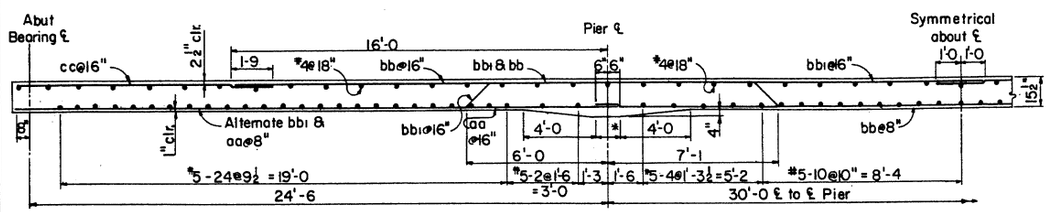


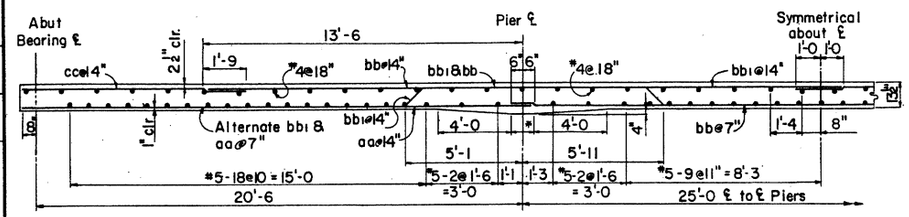


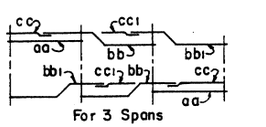


For 3 Spans

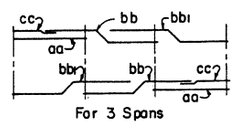


For 3 Spans

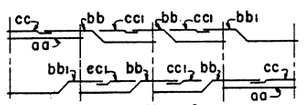


For 4 or More Spans

SLAB STEEL PLACING DIAGRAM

For 32½-40 Span Length

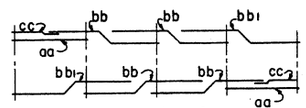


For 4 or More Spans

SLAB STEEL PLACING DIAGRAM

For 28½-35, 24½-30 & 20½-25 Span Lengths

STEEL LIST

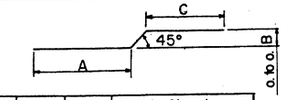


| Span Lgths | Mark | Size | Bend | Lgth | Bend Dimensions A | B | C |
|---|---|---|---|---|---|---|---|
| 32'-6, 40'-0 | aa | 10 | str | 33'-9 | | | |
| | bb | 10 | ⌒ | 54'-0 | 31'-1 | 1'-4½ | 21'-2 |
| | bb1 | 10 | ⌒ | 46'-9 | 25'-3 | 1'-4½ | 19'-8 |
| | cc | 6 | str | 22'-0 | | | |
| | cc1 | 4 | str | 17'-6 | | | |
| 28'-6, 35'-0 | aa | 10 | str | 29'-9 | | | |
| | bb | 10 | ⌒ | 54'-6 | 27'-3 | 1'-2½ | 25'-8 |
| | bb1 | 10 | ⌒ | 48'-3 | 22'-2 | 1'-2½ | 24'-5 |
| | cc | 6 | str | 12'-6 | | | |
| 24'-6, 30'-0 | aa | 9 | str | 25'-9 | | | |
| | bb | 9 | ⌒ | 47'-0 | 23'-5 | 1'-0½ | 22'-2 |
| | bb1 | 9 | ⌒ | 41'-6 | 19'-2 | 1'-0½ | 21'-1 |
| | cc | 6 | str | 11'-0 | | | |
| 20'-6, 25'-0 | aa | 8 | str | 21'-9 | | | |
| | bb | 8 | ⌒ | 39'-6 | 19'-7 | 10½" | 18'-8 |
| | bb1 | 8 | ⌒ | 35'-0 | 16'-1 | 10½" | 17'-10 |
| | cc | 6 | str | 9'-6 | | | |

GENERAL NOTES:

See Project Drawings for cross section of deck slab, roadway width, curbs, railings, and foundations.
Minimum length of bridge shall be 3 spans. For additional length intermediate spans equal to the center span shall be added.
Construction - Standard Specifications Arizona Highway Department Edition of 1969, revised to date.
Design - A.A.S.H.O. Specifications for Highway Bridges 1973.

Dead Load - Dead Load includes allowance of 25 pounds per square foot for future wearing surface.
Loading Class - HS20-44
Load Distribution - E = 4.0 + .06S (S taken as effective end span length)
Stresses - Reinforcing Steel $f_s$ = 20,000 psi
Class S concrete $f'_c$ = 4,500 psi, $f_c$ = 1,400 psi
Reinforcing steel shall conform to ASTM Spec. A615.
Bar sizes #7 and smaller shall be Grade 40.
Bar sizes #8 and larger shall be Grade 60.

Curbs and/or sidewalk shall be poured to grade after falsework has been struck.
Dimensions shall not be scaled from drawings.
Haunch dimension normal to centerline of bent.
Forms shall be cambered for dead load deflection, vertical curvature, form deflection and falsework settlement. Camber figures given in plans are for dead load only.

DEAD LOAD CAMBER

| L | L' | A | B | C | D | E | F | G |
|---|---|---|---|---|---|---|---|---|
| 32'-6 | 40'-0 | 0" | 1/4" | 9/32" | 1/8" | 0" | 1/8" | 9/32" |
| 28'-6 | 35'-0 | 0" | 3/16" | 7/32" | 3/32" | 0" | 3/32" | 3/16" |
| 24'-6 | 30'-0 | 0" | 1/8" | 5/32" | 1/16" | 0" | 3/32" | 3/32" |
| 20'-6 | 25'-0 | 0" | 3/32" | 3/32" | 1/32" | 0" | 3/32" | 3/32" |

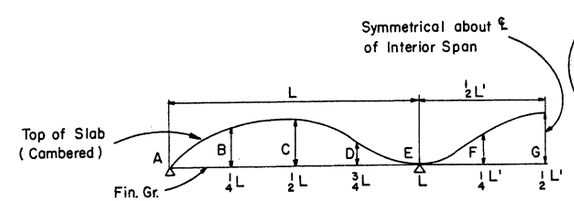


DEAD LOAD CAMBER DIAGRAM

NO SCALE

*Dimension varies. See Project Drawings for dimension and Special Pier Details.

| NO. | DESCRIPTION OF REVISIONS | MADE BY | DATE |
|---|---|---|---|
| 1 | Added haunch dimension note | JTW | 7-76 |
| 2 | Change notes & clearances | WEB | 2-81 |

| | | |
|---|---|---|
| DESIGN | JEM | 9-72 |
| DRAWN | CAG | 11-72 |
| CHECKED | JEM, HW | 12-72 |

DESIGN APPROVED: R. C. Buchler

APPROVED FOR DISTRIBUTION: E. H. Scudellin

ARIZONA DEPARTMENT OF TRANSPORTATION HIGHWAYS DIVISION STANDARD PLANS

CONTINUOUS SPAN SLAB HS20-44 LOADING

REVISION

STANDARD NO. CS-20

PLAN NO. B-09.10

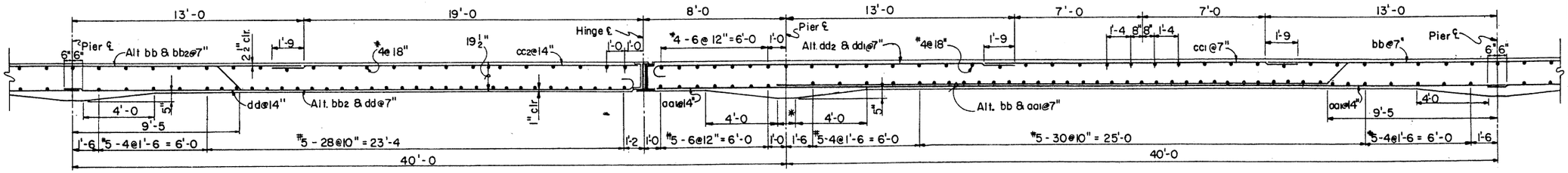


NOTES:

Refer to B-09.10 and Project Drawings for General Notes.

Refer to B-10.10 for steel list, bar placing diagrams and hinge details.

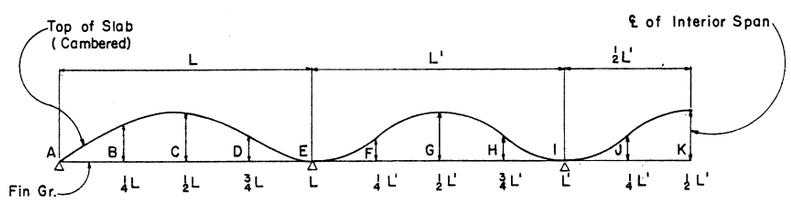


DEAD LOAD CAMBER DIAGRAM

NO SCALE

DEAD LOAD CAMBER

| L | L' | A | B | C | D | E | F | G | H | I | J | K |
|---|---|---|---|---|---|---|---|---|---|---|---|---|
| 32'-6 | 40'-0 | 0" | 1/4" | 9/32" | 1/8" | 0" | 1/8" | 9/32" | 1/8" | 0" | 1/8" | 9/32" |
| 28'-6 | 35'-0 | 0" | 3/16" | 7/32" | 3/32" | 0" | 3/32" | 3/16" | 3/32" | 0" | 3/32" | 3/16" |
| 24'-6 | 30'-0 | 0" | 1/8" | 5/32" | 1/16" | 0" | 3/32" | 5/32" | 3/32" | 0" | 3/32" | 5/32" |
| 20'-6 | 25'-0 | 0" | 3/32" | 3/32" | 1/32" | 0" | 1/32" | 3/32" | 1/32" | 0" | 1/32" | 3/32" |

Camber hinge span as per interior spans.

*Dimension varies. See Project Drawings for dimension and Special Pier Details.

| NO. | DESCRIPTION OF REVISIONS | MADE BY | DATE |
|---|---|---|---|
| 1 | Changed haunch dimension | J.T.W. | 7-76 |
| 2 | | | |
| 3 | | | |

| | | |
|---|---|---|
| DESIGN | JEM | 10-72 |
| DRAWN | CAG | 11-72 |
| CHECKED | JEM, HW | 12-72 |

| DESIGN APPROVED | ARIZONA DEPARTMENT OF TRANSPORTATION HIGHWAYS DIVISION STANDARD PLANS | REVISION |
|---|---|---|
| APPROVED FOR DISTRIBUTION | CONTINUOUS SPAN SLAB WITH HINGE HS20-44 LOADING | STANDARD NO. CSH-20 |
| | | PLAN NO. B-09.20 |

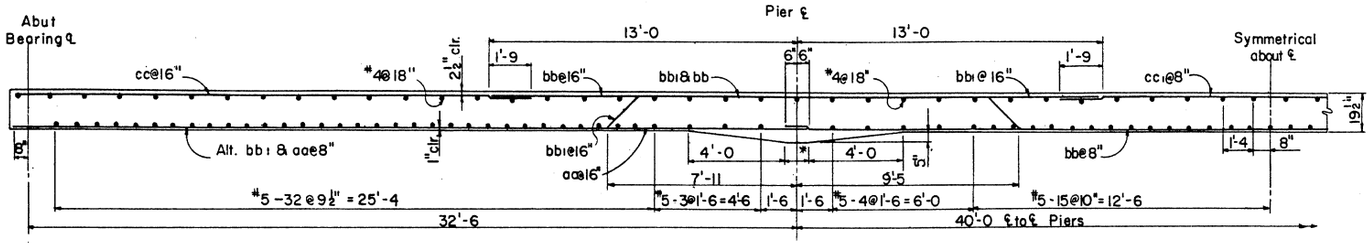


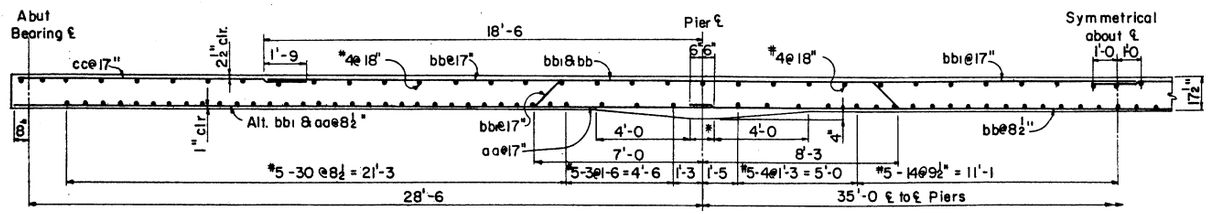


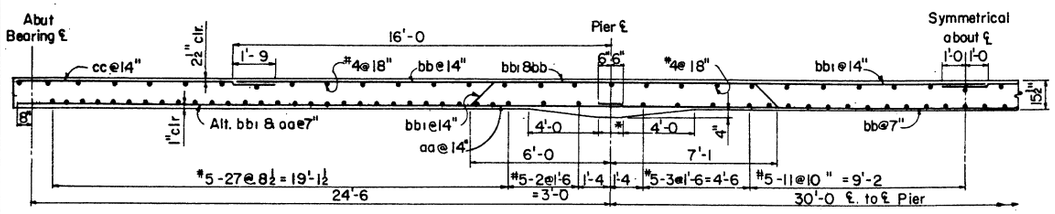


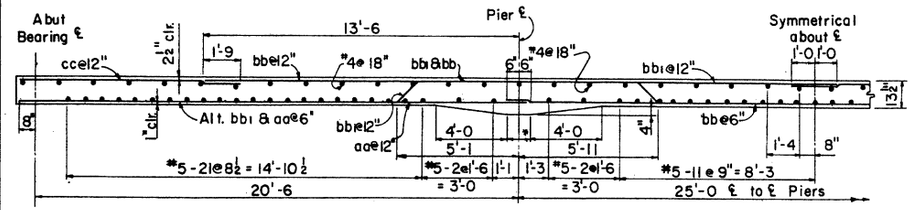


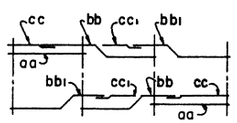


For 3 Spans

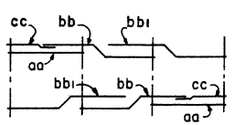


For 3 Spans

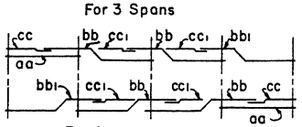


For 4 or more spans

SLAB STEEL PLACING DIAGRAM

For $32\frac{1}{2}$ - 40 Span Length

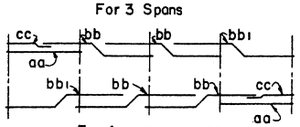


For 4 or more spans

SLAB STEEL PLACING DIAGRAM

For $28\frac{1}{2}$ - 35, $24\frac{1}{2}$ - 30, $20\frac{1}{2}$ - 25 Span Lengths

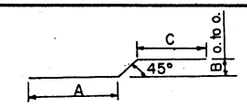


STEEL LIST

| Span Lgths | Mark | Size | Bend | Lgth | Bend Dimensions A | B | C |
|---|---|---|---|---|---|---|---|
| 32'-6, 40'-0 | aa | 10 | str | 33'-9 | | | |
| | bb | 10 | ~ | 54'-0 | 31'-1 | 1'-4½ | 21'-2 |
| | bb1 | 10 | ~ | 46'-9 | 25'-3 | 1'-4½ | 19'-8 |
| | cc | 6 | str | 22'-0 | | | |
| | cc1 | 4 | str | 17'-6 | | | |
| 28'-6, 35'-0 | aa | 10 | str | 29'-9 | | | |
| | bb | 10 | ~ | 54'-6 | 27'-3 | 1'-2½ | 25'-8 |
| | bb1 | 10 | ~ | 48'-3 | 22'-2 | 1'-2½ | 24'-5 |
| | cc | 6 | str | 12'-6 | | | |
| 24'-6, 30'-0 | aa | 9 | str | 25'-9 | | | |
| | bb | 9 | ~ | 47'-0 | 23'-5 | 1'-0½ | 22'-2 |
| | bb1 | 9 | ~ | 41'-6 | 19'-2 | 1'-0½ | 21'-1 |
| | cc | 6 | str | 11'-0 | | | |
| 20'-6, 25'-0 | aa | 8 | str | 21'-9 | | | |
| | bb | 8 | ~ | 39'-6 | 19'-7 | 10½" | 18'-8 |
| | bb1 | 8 | ~ | 35'-0 | 16'-1 | 10½" | 17'-10 |
| | cc | 6 | str | 9'-6 | | | |

## GENERAL NOTES:

See Project Drawings for cross section of deck slab, roadway width, curbs, railings, and foundations.

Minimum length of bridge shall be 3 spans. For additional length intermediate spans equal to the center span shall be added.

Construction - Standard Specifications Arizona Highway Department Edition of 1969, revised to date.

Design - A.A.S.H.O. Specifications for Highway Bridges 1973.

Dead Load - Dead Load includes allowance of 25 pounds per square foot for future wearing surface.

Loading Class - HS20-44 and/or Interstate Alternate Loading.

Load Distribution - E = 4.0 + .06S (S taken as effective end span length)

Stresses - Reinforcing Steel fs = 20,000 psi
Class S concrete f'c = 4,500 psi, fc = 1,400 psi

Reinforcing steel shall conform to ASTM Spec. A615.
Bar sizes #7 and smaller shall be Grade 40.
Bar sizes #8 and larger shall be Grade 60.

Curbs and/or sidewalk shall be poured to grade after falsework has been struck.

Dimensions shall not be scaled from drawings.

Haunch dimension normal to centerline of bent.

Forms shall be cambered for dead load deflection, vertical curvature, form deflection and falsework settlement. Camber figures given in plans are for dead load only.

DEAD LOAD CAMBER

| L | L' | A | B | C | D | E | F | G |
|---|---|---|---|---|---|---|---|---|
| 32'-6 | 40'-0 | 0" | 1/4" | 9/32" | 1/8" | 0" | 1/8" | 9/32" |
| 28'-6 | 35'-0 | 0" | 3/16" | 7/32" | 3/32" | 0" | 3/32" | 3/16" |
| 24'-6 | 30'-0 | 0" | 1/8" | 5/32" | 1/16" | 0" | 3/32" | 5/32" |
| 20'-6 | 25'-0 | 0" | 3/32" | 3/32" | 1/32" | 0" | 1/32" | 3/32" |

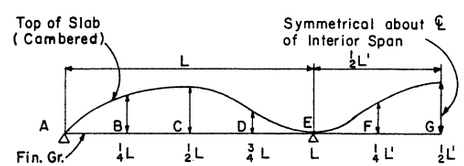


DEAD LOAD CAMBER DIAGRAM

NO SCALE

* Dimension varies. See Project Drawings for dimension and Special Pier Details.

| DESIGN | DRAWN | CHECKED | JEM | CAG | JEM, HW | 9-72 | 11-72 | 12-72 | NO. | DESCRIPTION OF REVISIONS | MADE BY | DATE |
|---|---|---|---|---|---|---|---|---|---|---|---|---|
| | | | | | | | | | ① | Added haunch dimension note | JTW | 7-75 |
| | | | | | | | | | ② | | | |
| | | | | | | | | | ③ | | | |

DESIGN APPROVED: K.C. Brechler

APPROVED, FOR DISTRIBUTION: F. B. Hendricks

ARIZONA
DEPARTMENT OF TRANSPORTATION
HIGHWAYS DIVISION
STANDARD PLANS

CONTINUOUS SPAN SLAB
INTERSTATE LOADING

REVISION

STANDARD NO. CS-20 I

PLAN NO. B-09.30

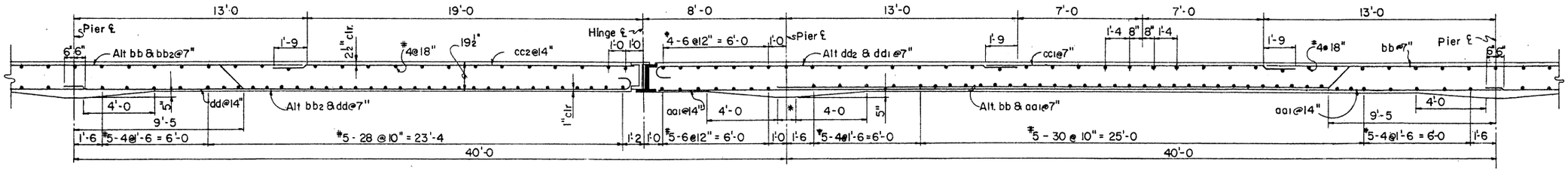


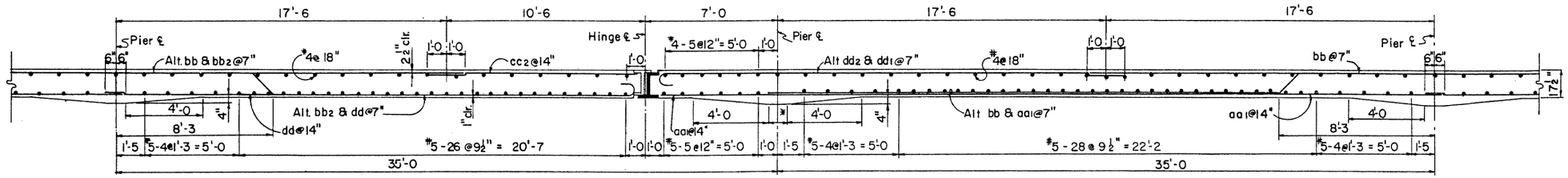


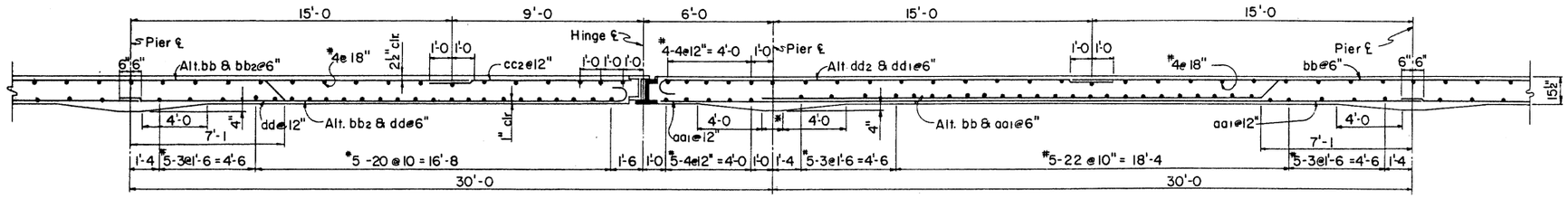


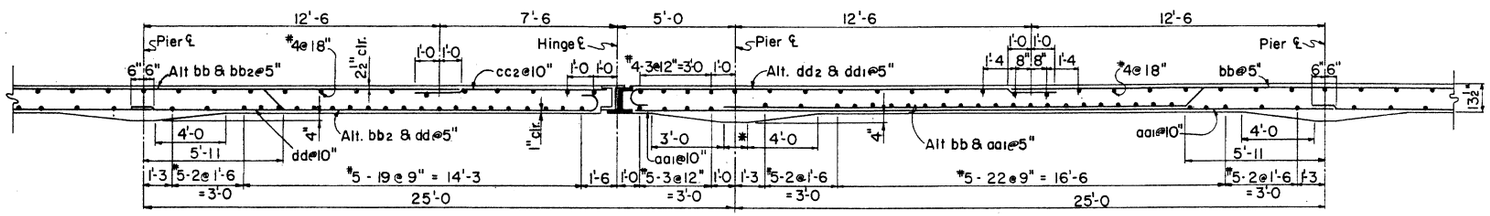


NOTES:

Refer to B-09.30 and Project Drawings for General Notes.
Refer to B-10.10 for steel list, bar placing diagram and hinge details.

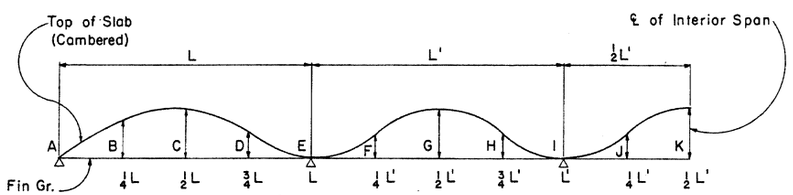


DEAD LOAD CAMBER DIAGRAM
NO SCALE

DEAD LOAD CAMBER

| L | L' | A | B | C | D | E | F | G | H | I | J | K |
|---|---|---|---|---|---|---|---|---|---|---|---|---|
| 32'-6 | 40'-0 | 0" | 1/4" | 9/32" | 1/8" | 0" | 1/8" | 9/32" | 1/8" | 0" | 1/8" | 9/32" |
| 28'-6 | 35'-0 | 0" | 1/16" | 7/32" | 3/32" | 0" | 3/32" | 5/16" | 3/32" | 0" | 3/32" | 3/16" |
| 24'-6 | 30'-0 | 0" | 1/8" | 5/32" | 1/16" | 0" | 3/32" | 5/32" | 3/32" | 0" | 3/32" | 5/32" |
| 20'-6 | 25'-0 | 0" | 3/32" | 3/32" | 1/32" | 0" | 1/32" | 3/32" | 3/32" | 0" | 1/32" | 3/32" |

Camber hinge span as per interior spans

* Dimension varies. See Project Drawings for dimension and Special Pier Details.

| DESIGN | JEM | 10-72 | NO. | DESCRIPTION OF REVISIONS | MADE BY | DATE |
|---|---|---|---|---|---|---|
| DRAWN | CAG | 11-72 | 1 | Changed haunch dimension | JTW | 7-76 |
| CHECKED | JEM, NW | 12-72 | 2 | | | |
| | | | 3 | | | |

DESIGN APPROVED R.C. Brechler

APPROVED FOR DISTRIBUTION E. F. Sandelin

ARIZONA
DEPARTMENT OF TRANSPORTATION
HIGHWAYS DIVISION
STANDARD PLANS

CONTINUOUS SPAN SLAB WITH HINGE, INTERSTATE LOADING

REVISION

STANDARD NO. CSH-20 I

PLAN NO. B-09.40

## INTERSTATE OR HS20 - 44*

| Span Lgth | Mark | Size | Bend | Lgth | Bend Dimensions A | B | C | D | E |
|---|---|---|---|---|---|---|---|---|---|
| 40'-0 | aa1 | 10 | str | 47'-9 | | | | | |
| | bb | 10 | 2 | 54'-0 | 31'-1 | 1'-4½ | 21'-2 | | |
| | bb2 | 10 | 1 | 46'-0 | 22'-0 | 1'-4½ | 21'-2 | 9" | 9½" |
| | cc1 | 4 | str | 17'-6 | | | | | |
| | cc2 | 6 | str | 20'-6 | | | | | |
| | dd | 10 | 3 | 33'-0 | 31'-11 | 9" | 9½" | | |
| | dd1 | 10 | 3 | 21'-9 | 20'-7 | 9" | 9½" | | |
| | dd2 | 10 | 3 | 21'-9 | 20'-7 | 9" | 9½" | | |
| 35'-0 | aa1 | 10 | str | 41'-9 | | | | | |
| | bb | 10 | 2 | 54'-6 | 27'-3 | 1'-2½ | 25'-8 | | |
| | bb2 | 10 | 1 | 47'-6 | 19'-2 | 1'-2½ | 25'-8 | 9" | 9½" |
| | cc2 | 6 | str | 11'-3 | | | | | |
| | dd | 10 | 3 | 29'-0 | 27'-11 | 9" | 9½" | | |
| | dd1 | 10 | 3 | 32'-6 | 31'-5 | 9" | 9½" | | |
| | dd2 | 10 | 3 | 26'-3 | 25'-1 | 9" | 9½" | | |
| 30'-0 | aa1 | 9 | str | 35'-9 | | | | | |
| | bb | 9 | 2 | 47'-0 | 23'-5 | 1'-0½ | 22'-2 | | |
| | bb2 | 9 | 1 | 40'-9 | 16'-4 | 1'-0½ | 22'-2 | 8" | 8½" |
| | cc2 | 6 | str | 9'-9 | | | | | |
| | dd | 9 | 3 | 25'-0 | 23'-11 | 8" | 8½" | | |
| | dd1 | 9 | 3 | 27'-6 | 26'-5 | 8" | 8½" | | |
| | dd2 | 9 | 3 | 22'-6 | 21'-7 | 8" | 8½" | | |
| 25'-0 | aa1 | 8 | str | 29'-9 | | | | | |
| | bb | 8 | 2 | 39'-6 | 19'-7 | 10½" | 18'-8 | | |
| | bb2 | 8 | 1 | 34'-3 | 13'-6 | 10½" | 18'-8 | 7" | 7½" |
| | cc2 | 6 | str | 8'-3 | | | | | |
| | dd | 8 | 3 | 20'-9 | 19'-11 | 7" | 7½" | | |
| | dd1 | 8 | 3 | 22'-3 | 21'-5 | 7" | 7½" | | |
| | dd2 | 8 | 3 | 19'-0 | 18'-1 | 7" | 7½" | | |

* Bar sizes and bend dimensions are the same for both Interstate and HS20-44 slabs. Bar spacing varies for the two cases. See B-09.20 and B-09.30 for details.

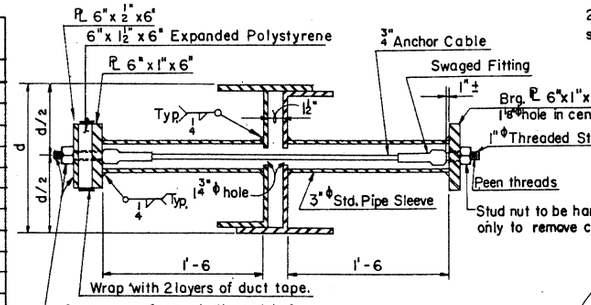


SECTION THRU HINGE RESTRAINER

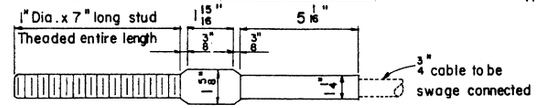


SWAGED FITTING AND STUD DETAIL

NOTE:

Anchor cable shall be 6 x 19 classification, galvanized, with a minimum breaking strength of 21.4 tons.

Swaged fitting and stud assembly shall conform to the requirements of American Iron and Steel Institute 1035 and shall develop the breaking strength of the cable.

HINGE RESTRAINER DETAILS

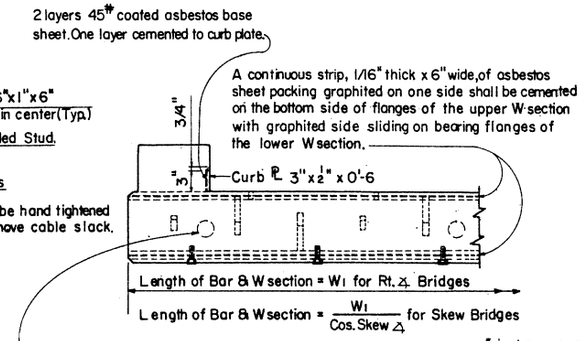


SECTION D-D

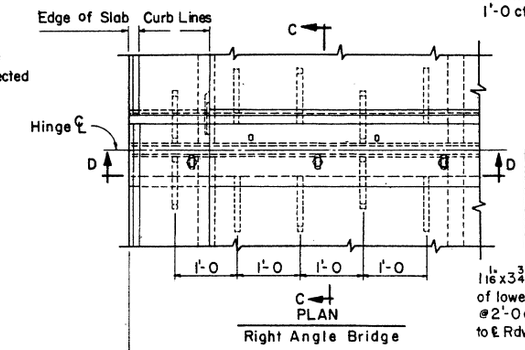


PLAN

Right Angle Bridge

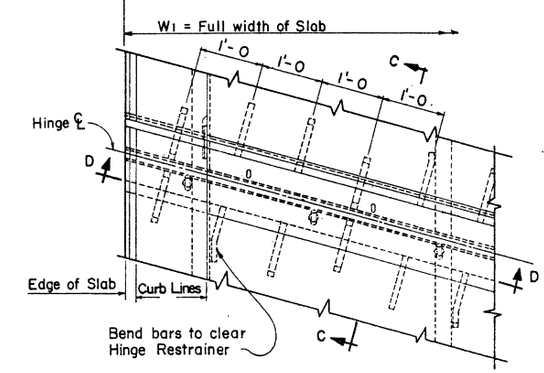


PLAN

Skew Bridge

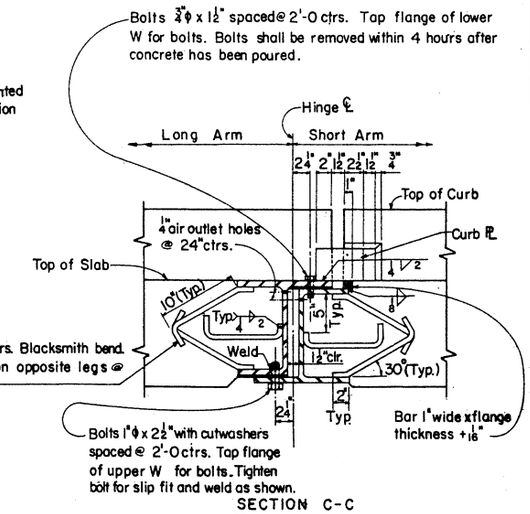


SECTION C-C

NOTES: W sections see table below

Burn off one half flange of each section flush with web face.

Bearing faces of flanges shall be ground smooth after drilling and tapping.

W sections shall have parallel flange faces.

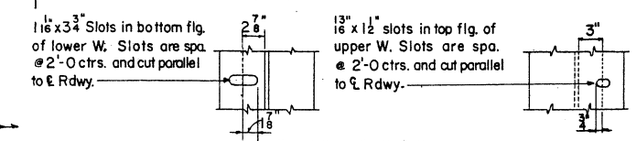


FLANGE SLOT DETAILS

NOTES:

Structural steel shall conform to ASTM Spec. A36.

Paint and painting shall conform to Standard Specifications.
- Contact surfaces shall not be painted.
- Structural steel - Shop - One coat paint #1A or #1B, #3 and #10.
- No field paint required.

Slab Hinge Joint shall be shop assembled, shipped and erected as a unit. Unit shall be shop fabricated to conform to the roadway section as noted on deck details.

Joint shall be continuous for lengths 40 feet or less. For lengths over 40 feet the joint may be two pieces butted together, without splicing, at the roadway crown or construction centerline.

Butted ends shall meet smoothly on the roadway surface after installation or they shall be ground smooth.

Reinforcing steel shall conform to ASTM Spec. A615
- Bar sizes #7 and smaller shall be Grade 40.
- Bar sizes #8 and larger shall be Grade 60.

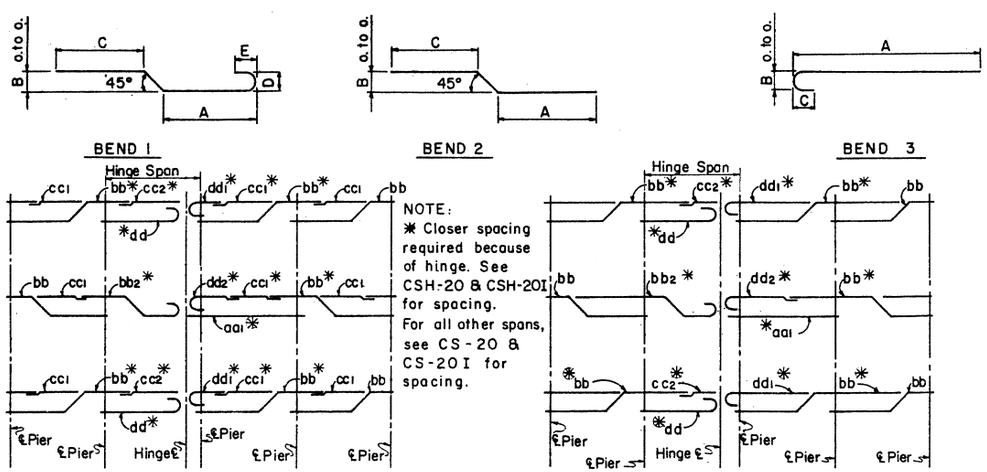


NOTE:

* Closer spacing required because of hinge. See CSH-20 & CSH-20I for spacing.

For all other spans, see CS-20 & CS-20I for spacing.

For 40' Span Lengths

For 35', 30' & 25' Span Lengths

STEEL PLACING DIAGRAM FOR HINGE SPAN & ADJACENT SPANS

TABLE OF W SECTIONS FOR VARIOUS SLAB THICKNESSES

| Slab Thickness | W Section |
|---|---|
| 19½" | W 18 x 97 |
| 17½" | W 18 x 97 |
| 15½" | W 14 x 90 |
| 13½" | W 12 x 72 |

| NO. | DESCRIPTION OF REVISIONS | MADE BY | DATE |
|---|---|---|---|
| 1 | Joint note added | SEA | 11-72 |
| 2 | Reinf. Note changed & W Shapes. | C.H. | 8-80 |

| | | | |
|---|---|---|---|
| DESIGN | JEM | 10-72 | |
| DRAWN | CAG | 11-72 | |
| CHECKED | JEM, HW | 12-72 | |

DESIGN APPROVED: R.C. Buchler

APPROVED FOR DISTRIBUTION: E. F. Scandella

ARIZONA DEPARTMENT OF TRANSPORTATION
HIGHWAYS DIVISION
STANDARD PLANS

SLAB HINGE JOINT AND HINGE SPAN REINFORCING DETAILS

REVISION

STANDARD NO. CSH-M

PLAN NO. B-10.10

NOTE:
When straight anchor bolt will not fit in headwall use alternate anchor bolt.

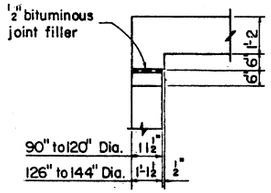


DETAIL B

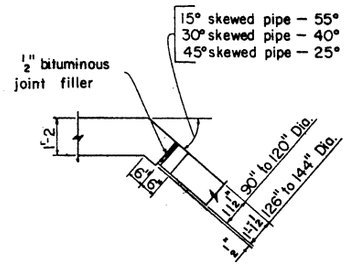


DETAIL C

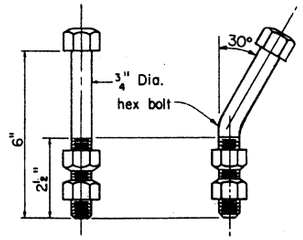


ANCHOR BOLT DETAIL




ALTERNATE ANCHOR BOLT DETAIL

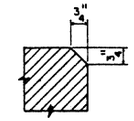


Chamfer all exposed corners as shown unless otherwise noted. This note applicable to all sheets.

CHAMFER DETAIL

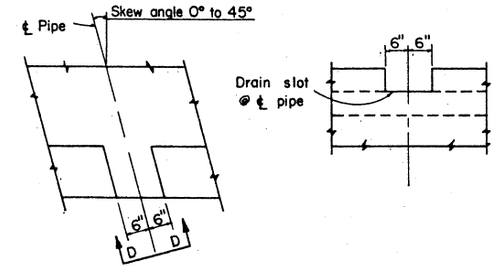


PLAN ELEVATION D-D

APRON DRAIN DETAIL

## GENERAL NOTES

Design– AASHO St'd Spec's for Highway Bridges 1977.

Construction– St'd Spec's Arizona Highway Department Edition of 1969, revised to date.
All concrete shall be Class A.
Reinforcing steel shall conform to ASTM Spec's A615, Grade 40.
All bend dimensions for reinforcing steel shall be out to out of bars.
Dimensions shall not be scaled from drawings.
All reinforcing steel shall have 2" clear cover unless noted otherwise.
Stresses– Class A concrete $f_c$ = 1000 psi;
Reinforcing steel $f_s$ = 20,000 psi.
Bolt material shall conform to ASTM Spec's A307.
Bolts shall be galvanized to conform to ASTM Specs. A153.

When end of pipe is cut to fit skew or slope, disturbed area of pipe shall be treated in accordance with requirements of the Standard Spec's.

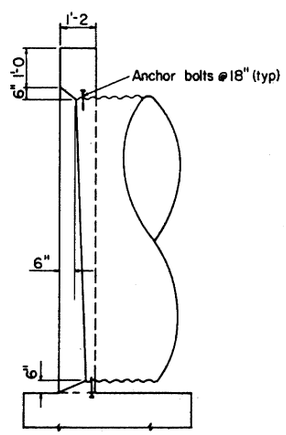


Outlet End

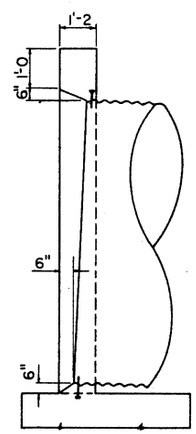


Inlet End

DETAIL D

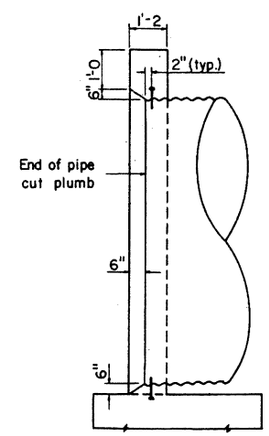


Outlet or Inlet End

DETAIL E

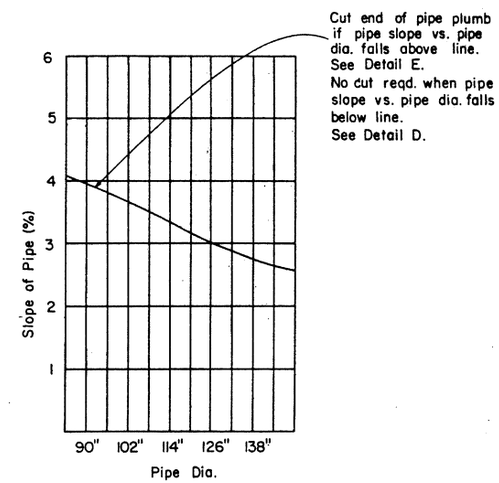


CHART

(Use to determine treatment at end of pipe)

| DESIGN | K.W. | 9-72 | NO. | DESCRIPTION OF REVISIONS | MADE BY | DATE |
|---|---|---|---|---|---|---|
| DRAWN | L.A.M. | 9-72 | 1 | Added Alt. Bolt Detail | W.S.K.:see | 2-11-75 |
| CHECKED | R.L.C. | 9-72 | 2 | Wall Thicknesses | G.H. | 7-14-76 |
| | | | 3 | | | |

| DESIGN APPROVED | ARIZONA DEPARTMENT OF TRANSPORTATION HIGHWAYS DIVISION STANDARD PLANS | REVISION |
|---|---|---|
| APPROVED FOR DISTRIBUTION | PIPE CULVERT HEADWALLS MISCELLANEOUS DETAILS | STANDARD NO. PH-1 |
| | | PLAN NO. B-11.10 |

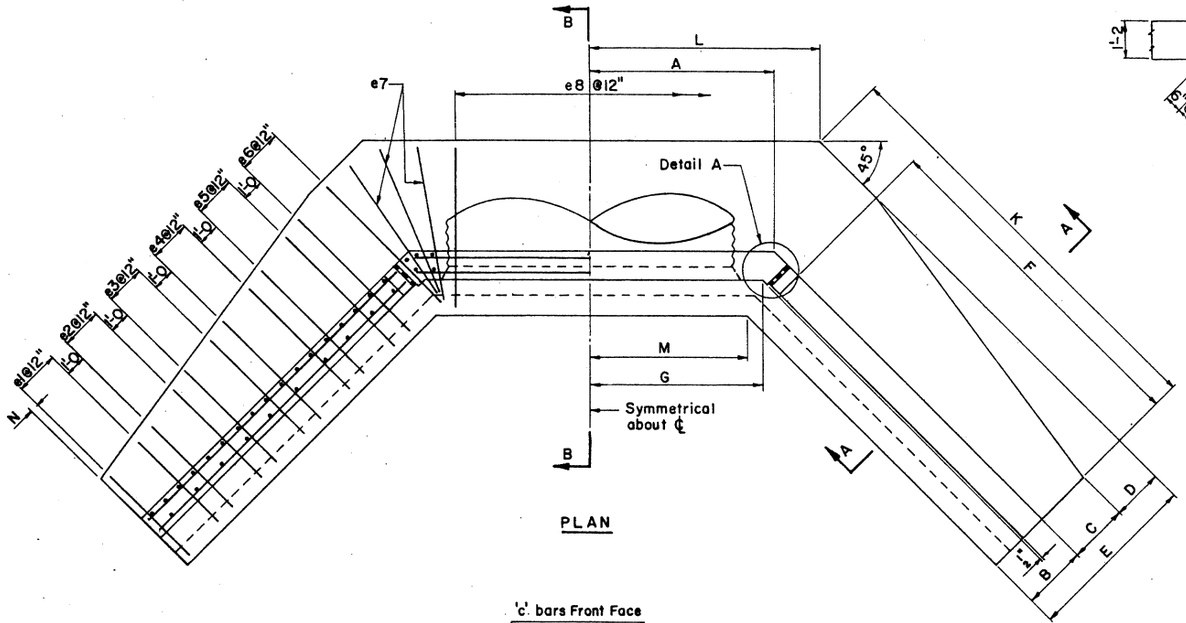


PLAN

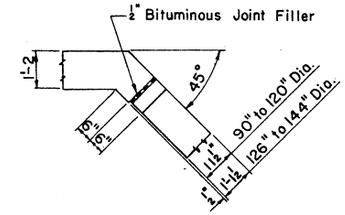


DETAIL A

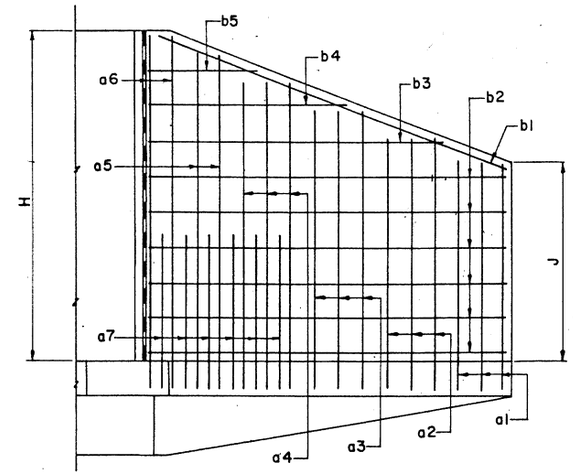


Back Face
WING ELEVATION

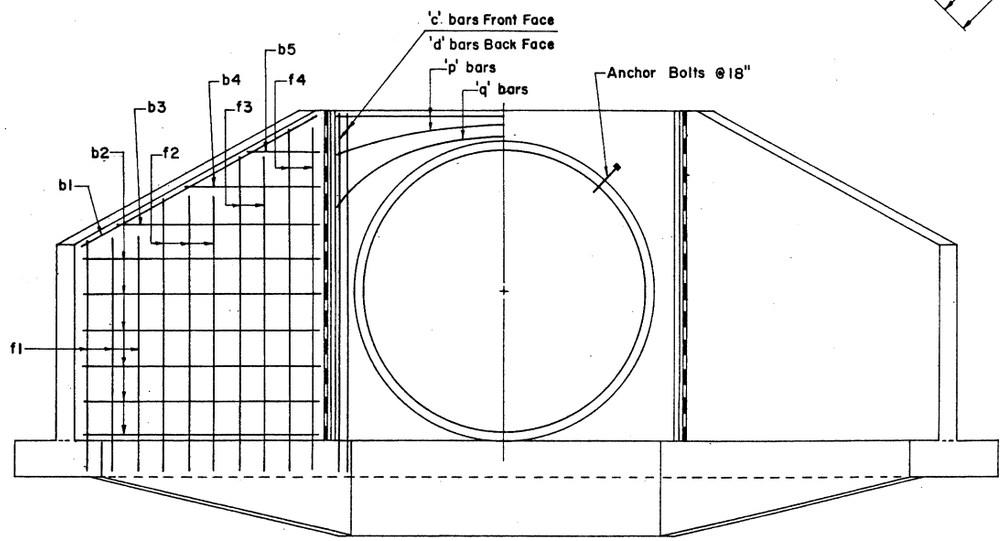


ELEVATION

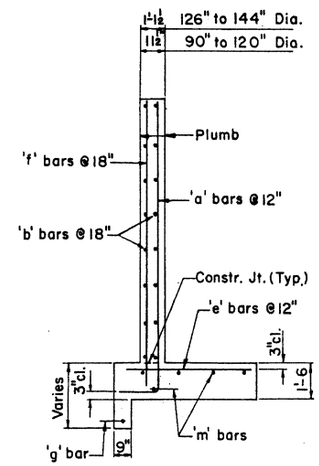


SECTION A-A

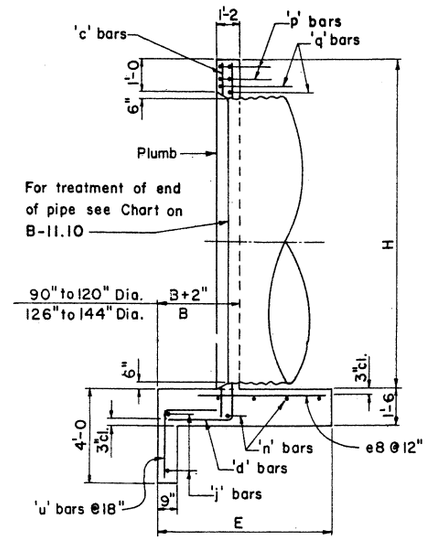


SECTION B-B

Notes: For General Notes and Misc. Details see B-11.10.
For steel list and bend diagrams see B-12.30, B-12.40 or B-12.50.

| DESIGN | K.W. | 9-72 | NO. | DESCRIPTION OF REVISIONS | MADE BY | DATE |
|---|---|---|---|---|---|---|
| DRAWN | G.H. | 9-72 | 1 | Wall Thicknesses | G.H. | 7-14-76 |
| CHECKED | R.L.C. | 9-72 | 2 | | | |
| | | | 3 | | | |

| DESIGN APPROVED | ARIZONA DEPARTMENT OF TRANSPORTATION HIGHWAYS DIVISION STANDARD PLANS | REVISION |
|---|---|---|
| APPROVED FOR DISTRIBUTION | INLET HEADWALL RIGHT ANGLE PIPE CULVERT | STANDARD NO. PH-2 |
| | | PLAN NO. B-12.10 |

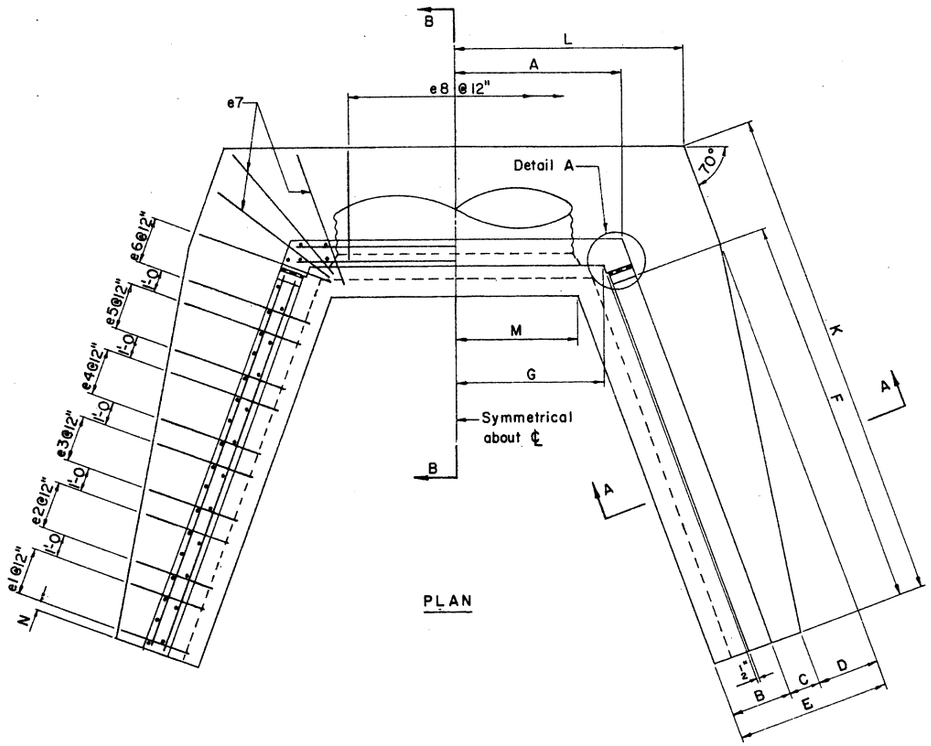


PLAN

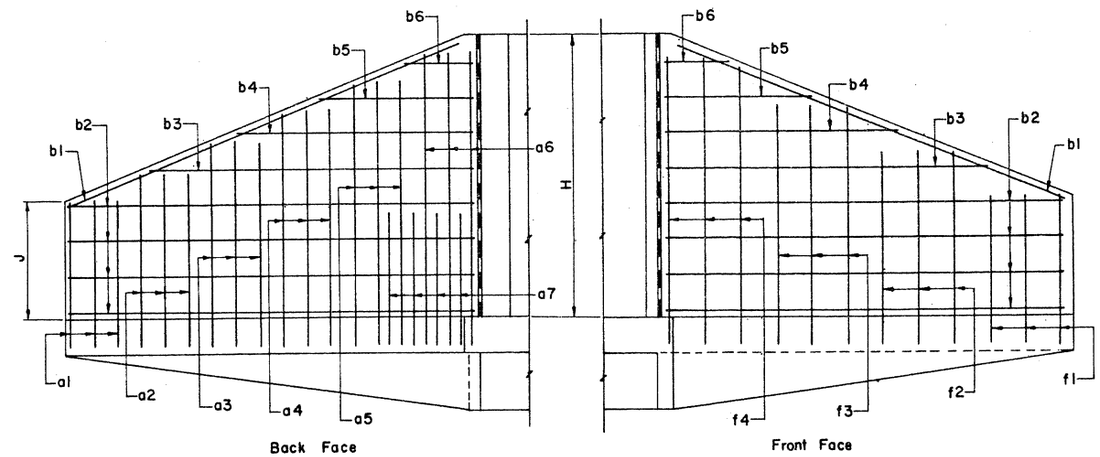


WING ELEVATION

WING ELEVATION

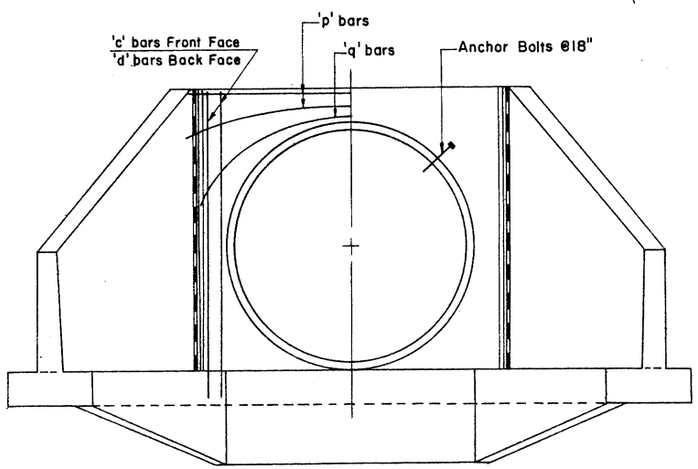


ELEVATION

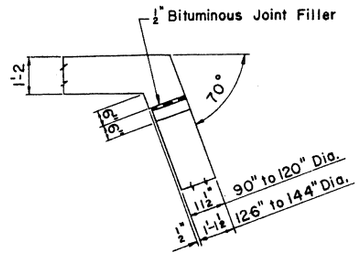


DETAIL A

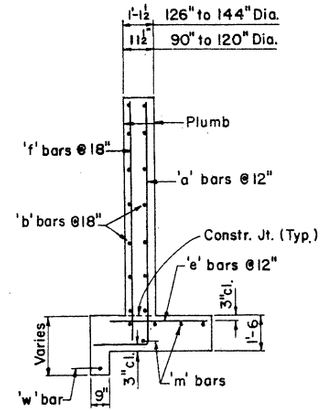


SECTION A-A

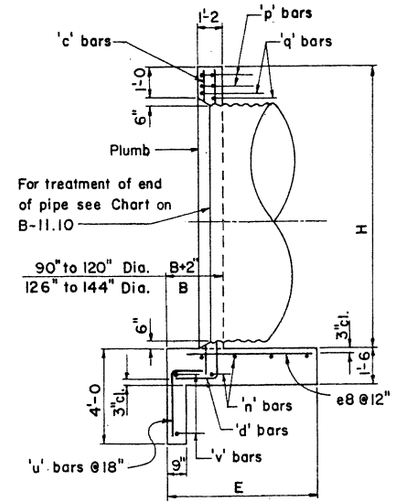


SECTION B-B

Notes: For General Notes and Misc. Details see B-11.10.
For steel list and bend diagrams see B-12.30, B-12.40 or B-12.50.

| DESIGN | K.W. | 9-72 | NO. | DESCRIPTION OF REVISIONS | MADE BY | DATE |
|---|---|---|---|---|---|---|
| DRAWN | G.H. | 9-72 | 1 | Wall Thicknesses | G.H. | 7-14-76 |
| CHECKED | R.L.C. | 9-72 | 2 | | | |
| | | | 3 | | | |

| DESIGN APPROVED | ARIZONA DEPARTMENT OF TRANSPORTATION HIGHWAYS DIVISION STANDARD PLANS | REVISION |
|---|---|---|
| K.C. Buehler | | |
| APPROVED FOR DISTRIBUTION | OUTLET HEADWALL RIGHT ANGLE PIPE CULVERT | STANDARD NO. PH-3 |
| | | PLAN NO. B-12.20 |

## STEEL LIST - INLET END

| Mark | Bend | 90" Dia No | Size | Lgth | 96" Dia No | Size | Lgth | 102" Dia No | Size | Lgth | 108" Dia No | Size | Lgth | 114" Dia No | Size | Lgth | 120" Dia No | Size | Lgth | 126" Dia No | Size | Lgth | 132" Dia No | Size | Lgth | 138" Dia No | Size | Lgth | 144" Dia No | Size | Lgth |
|---|---|---|---|---|---|---|---|---|---|---|---|---|---|---|---|---|---|---|---|---|---|---|---|---|---|---|---|---|---|---|---|
| a1 | A | 6 | #5 | 8-6 | 6 | #5 | 9-0 | 6 | #5 | 9-3 | 6 | #5 | 9-6 | 6 | #5 | 10-0 | 6 | #5 | 10-3 | 6 | #6 | 10-6 | 6 | #6 | 10-9 | 6 | #6 | 11-3 | 6 | #6 | 11-6 |
| a2 | A | 6 | #5 | 9-6 | 6 | #5 | 10-0 | 6 | #5 | 10-3 | 6 | #5 | 10-6 | 6 | #6 | 11-0 | 6 | #6 | 11-3 | 6 | #6 | 11-6 | 6 | #7 | 11-9 | 6 | #7 | 12-6 | 6 | #7 | 12-6 |
| a3 | A | 6 | #5 | 10-6 | 6 | #6 | 11-0 | 6 | #6 | 11-3 | 6 | #6 | 11-6 | 6 | #6 | 12-0 | 6 | #7 | 12-3 | 6 | #7 | 12-9 | 6 | #7 | 13-0 | 6 | #8 | 13-6 | 6 | #8 | 13-9 |
| a4 | A | 6 | #6 | 11-9 | 6 | #6 | 12-0 | 4 | #7 | 12-3 | 6 | #7 | 12-6 | 6 | #7 | 13-0 | 6 | #7 | 13-3 | 6 | #8 | 13-9 | 6 | #8 | 14-0 | 6 | #8 | 14-6 | 6 | #8 | 14-9 |
| a5 | A | | | | | | | 4 | #7 | 13-0 | 4 | #8 | 13-6 | 4 | #8 | 14-0 | 6 | #8 | 14-3 | 6 | #8 | 14-9 | 4 | #8 | 15-0 | 4 | #8 | 15-6 | 6 | #8 | 15-9 |
| a6 | A | | | | | | | | | | | | | | | | | | | | | | 4 | #8 | 15-9 | 4 | #8 | 16-3 | 4 | #8 | 17-0 |
| a7 | A | | | | | | | | | | | | | | | | | | | | | | 8 | #4 | 5-0 | 8 | #4 | 5-6 | 10 | #4 | 6-0 |
| b1 | str | 4 | #4 | 11-6 | 4 | #4 | 12-0 | 4 | #4 | 12-6 | 4 | #4 | 13-3 | 4 | #4 | 14-0 | 4 | #4 | 14-6 | 4 | #4 | 15-0 | 4 | #4 | 15-9 | 4 | #4 | 16-3 | 4 | #4 | 16-9 |
| b2 | str | 16 | #4 | 11-0 | 16 | #4 | 11-6 | 16 | #4 | 12-0 | 20 | #4 | 12-9 | 20 | #4 | 13-6 | 20 | #4 | 14-0 | 20 | #4 | 14-6 | 20 | #4 | 15-0 | 24 | #4 | 15-6 | 24 | #4 | 16-0 |
| b3 | str | 4 | #4 | 8-6 | 4 | #4 | 10-3 | 4 | #4 | 11-6 | 4 | #4 | 9-0 | 4 | #4 | 10-3 | 4 | #4 | 11-9 | 4 | #4 | 13-6 | 4 | #4 | 14-6 | 4 | #4 | 11-6 | 4 | #4 | 13-0 |
| b4 | str | 4 | #4 | 4-0 | 4 | #4 | 6-3 | 4 | #4 | 7-3 | 4 | #4 | 4-9 | 4 | #4 | 6-0 | 4 | #4 | 7-6 | 4 | #4 | 8-9 | 4 | #4 | 10-3 | 4 | #4 | 7-3 | 4 | #4 | 8-9 |
| b5 | str | | | | 4 | #4 | 2-0 | 4 | #4 | 3-9 | | | | 4 | #4 | 2-0 | 4 | #4 | 3-9 | 4 | #4 | 5-0 | 4 | #4 | 6-6 | 4 | #4 | 3-9 | 4 | #4 | 5-0 |
| c | str | 4 | #4 | 10-6 | 4 | #4 | 11-0 | 4 | #4 | 11-6 | 4 | #4 | 12-0 | 4 | #4 | 12-6 | 4 | #4 | 13-0 | 4 | #4 | 13-6 | 4 | #4 | 14-0 | 4 | #4 | 14-6 | 4 | #4 | 15-0 |
| d | A | 6 | #6 | 12-3 | 6 | #6 | 12-9 | 6 | #7 | 13-3 | 6 | #8 | 13-9 | 6 | #8 | 14-6 | 6 | #8 | 15-0 | 6 | #8 | 15-6 | 6 | #8 | 16-0 | 6 | #8 | 16-6 | 6 | #8 | 17-0 |
| e1 | str | 6 | #4 | 2-9 | 6 | #4 | 3-0 | 6 | #4 | 3-0 | 6 | #4 | 3-3 | 6 | #4 | 3-6 | 6 | #4 | 3-6 | 6 | #4 | 3-9 | 6 | #4 | 3-9 | 6 | #4 | 4-0 | 6 | #5 | 4-3 |
| e2 | str | 6 | #4 | 3-3 | 6 | #4 | 3-6 | 6 | #4 | 3-9 | 6 | #4 | 4-0 | 6 | #4 | 4-0 | 6 | #4 | 4-0 | 6 | #5 | 4-3 | 6 | #5 | 4-6 | 6 | #5 | 4-6 | 6 | #5 | 4-9 |
| e3 | str | 6 | #4 | 4-0 | 6 | #5 | 4-3 | 6 | #5 | 4-3 | 6 | #5 | 4-6 | 6 | #5 | 4-6 | 6 | #5 | 4-9 | 6 | #6 | 4-9 | 6 | #6 | 5-0 | 6 | #6 | 5-3 | 6 | #6 | 5-3 |
| e4 | str | 6 | #5 | 4-6 | 6 | #5 | 4-9 | 6 | #5 | 4-6 | 6 | #6 | 4-9 | 6 | #6 | 5-0 | 6 | #6 | 5-0 | 6 | #7 | 5-3 | 6 | #7 | 5-6 | 6 | #7 | 5-9 | 6 | #7 | 5-9 |
| e5 | str | | | | | | | 4 | #5 | 4-9 | 4 | #6 | 5-0 | 6 | #6 | 5-3 | 6 | #6 | 5-6 | 6 | #7 | 5-9 | 8 | #7 | 6-0 | 6 | #8 | 6-0 | 6 | #8 | 6-3 |
| e6 | str | | | | | | | | | | | | | | | | | | | | | | | | | 4 | #8 | 6-3 | 4 | #8 | 6-9 |
| e7 | str | 4 | #5 | 4-6 | 4 | #5 | 4-9 | 4 | #5 | 4-9 | 4 | #6 | 5-0 | 4 | #6 | 5-3 | 6 | #6 | 5-6 | 6 | #7 | 6-0 | 6 | #7 | 6-0 | 6 | #8 | 6-3 | 6 | #8 | 6-9 |
| e8 | str | 9 | #5 | 4-6 | 10 | #5 | 4-9 | 10 | #5 | 4-9 | 11 | #6 | 5-0 | 11 | #6 | 5-3 | 11 | #6 | 5-6 | 12 | #7 | 6-0 | 13 | #7 | 6-0 | 12 | #8 | 6-3 | 13 | #8 | 6-9 |
| f1 | str | 6 | #4 | 6-9 | 6 | #4 | 7-3 | 6 | #4 | 7-6 | 6 | #4 | 7-9 | 6 | #4 | 8-0 | 6 | #4 | 8-3 | 6 | #4 | 8-6 | 6 | #4 | 9-0 | 6 | #4 | 9-3 | 6 | #4 | 9-6 |
| f2 | str | 6 | #4 | 8-6 | 6 | #4 | 8-9 | 6 | #4 | 9-0 | 6 | #4 | 9-6 | 6 | #4 | 9-6 | 6 | #4 | 10-0 | 6 | #4 | 10-0 | 6 | #4 | 10-6 | 6 | #4 | 10-9 | 6 | #4 | 11-0 |
| f3 | str | 4 | #4 | 10-0 | 4 | #4 | 10-3 | 6 | #4 | 10-6 | 6 | #4 | 11-0 | 4 | #4 | 11-0 | 4 | #4 | 11-6 | 6 | #4 | 11-6 | 6 | #4 | 12-0 | 6 | #4 | 12-6 | 6 | #4 | 12-6 |
| f4 | str | | | | | | | | | | | | | 4 | #4 | 12-3 | 4 | #4 | 12-6 | 4 | #4 | 13-3 | 4 | #4 | 13-9 | 4 | #4 | 14-0 | 6 | #4 | 14-3 |
| g | str | 2 | #4 | 11-6 | 2 | #4 | 12-0 | 2 | #4 | 12-6 | 2 | #4 | 13-0 | 2 | #4 | 13-6 | 2 | #4 | 14-0 | 2 | #4 | 14-6 | 2 | #4 | 15-0 | 2 | #4 | 15-6 | 2 | #4 | 16-0 |
| u | B | 7 | #4 | 4-6 | 7 | #4 | 4-9 | 8 | #4 | 4-9 | 8 | #4 | 4-9 | 8 | #4 | 4-9 | 8 | #4 | 5-0 | 9 | #4 | 5-0 | 9 | #4 | 5-0 | 9 | #4 | 5-0 | 10 | #4 | 5-0 |
| j | str | 2 | #4 | 9-3 | 2 | #4 | 9-9 | 2 | #4 | 10-3 | 2 | #4 | 10-9 | 2 | #4 | 11-3 | 2 | #4 | 11-9 | 2 | #4 | 12-3 | 2 | #4 | 12-6 | 2 | #4 | 13-0 | 2 | #4 | 13-6 |
| m | str | 8 | #4 | 11-9 | 8 | #4 | 12-6 | 8 | #4 | 13-0 | 8 | #4 | 13-6 | 10 | #4 | 14-6 | 10 | #4 | 15-3 | 10 | #4 | 16-0 | 10 | #4 | 16-6 | 10 | #4 | 17-0 | 10 | #4 | 17-9 |
| n | str | 5 | #4 | 11-6 | 5 | #4 | 11-6 | 5 | #4 | 12-0 | 5 | #4 | 13-0 | 5 | #4 | 13-0 | 5 | #4 | 13-6 | 5 | #4 | 14-0 | 5 | #4 | 14-6 | 5 | #4 | 15-0 | 5 | #4 | 16-0 |
| p | str | 4 | #5 | 10-0 | 4 | #5 | 10-6 | 4 | #5 | 11-0 | 4 | #5 | 11-6 | 4 | #5 | 12-0 | 4 | #5 | 12-6 | 4 | #5 | 13-0 | 4 | #5 | 13-6 | 4 | #5 | 14-0 | 4 | #5 | 14-6 |
| q | str | 2 | #6 | 12-0 | 2 | #6 | 12-6 | 2 | #6 | 13-0 | 2 | #6 | 13-6 | 2 | #6 | 14-0 | 2 | #6 | 14-6 | 2 | #6 | 15-0 | 2 | #6 | 15-6 | 2 | #6 | 16-0 | 2 | #6 | 16-6 |

## STEEL LIST - OUTLET END

| Mark | Bend | 90" Dia No | Size | Lgth | 96" Dia No | Size | Lgth | 102" Dia No | Size | Lgth | 108" Dia No | Size | Lgth | 114" Dia No | Size | Lgth | 120" Dia No | Size | Lgth | 126" Dia No | Size | Lgth | 132" Dia No | Size | Lgth | 138" Dia No | Size | Lgth | 144" Dia No | Size | Lgth |
|---|---|---|---|---|---|---|---|---|---|---|---|---|---|---|---|---|---|---|---|---|---|---|---|---|---|---|---|---|---|---|---|
| a1 | A | 6 | #4 | 7-0 | 6 | #4 | 7-3 | 6 | #4 | 7-3 | 6 | #4 | 7-6 | 6 | #4 | 8-0 | 6 | #4 | 8-0 | 6 | #4 | 8-3 | 6 | #4 | 8-6 | 6 | #4 | 8-9 | 6 | #5 | 9-3 |
| a2 | A | 6 | #4 | 8-6 | 6 | #4 | 8-6 | 6 | #4 | 8-9 | 6 | #4 | 8-9 | 6 | #5 | 9-6 | 6 | #5 | 9-6 | 6 | #5 | 9-9 | 6 | #5 | 10-0 | 6 | #5 | 10-3 | 6 | #6 | 10-9 |
| a3 | A | 6 | #5 | 9-9 | 6 | #5 | 10-0 | 6 | #5 | 10-3 | 6 | #5 | 10-3 | 6 | #6 | 10-9 | 6 | #6 | 11-0 | 6 | #6 | 11-3 | 6 | #6 | 11-6 | 6 | #6 | 11-9 | 6 | #7 | 12-0 |
| a4 | A | 6 | #6 | 11-3 | 4 | #6 | 11-6 | 6 | #6 | 11-9 | 6 | #6 | 11-9 | 6 | #7 | 12-3 | 6 | #7 | 12-3 | 6 | #7 | 12-6 | 6 | #7 | 12-9 | 6 | #7 | 13-0 | 6 | #8 | 13-6 |
| a5 | A | | | | 4 | #7 | 12-6 | 4 | #7 | 13-0 | 4 | #7 | 13-3 | 6 | #8 | 13-9 | 4 | #8 | 13-6 | 4 | #8 | 14-0 | 6 | #8 | 14-0 | 6 | #8 | 14-6 | 6 | #8 | 15-0 |
| a6 | A | | | | | | | | | | | | | | | | 4 | #8 | 14-6 | 4 | #8 | 15-0 | 4 | #8 | 15-6 | 4 | #8 | 16-0 | 6 | #8 | 16-6 |
| a7 | A | | | | | | | | | | | | | | | | | | | 4 | #4 | 4-6 | 6 | #4 | 5-0 | 10 | #4 | 5-6 | 12 | #4 | 6-0 |
| b1 | str. | 4 | #4 | 12-6 | 4 | #4 | 13-0 | 4 | #4 | 14-0 | 4 | #4 | 14-9 | 4 | #4 | 15-6 | 4 | #4 | 16-6 | 4 | #4 | 16-9 | 4 | #4 | 17-6 | 4 | #4 | 18-0 | 4 | #4 | 18-6 |
| b2 | str. | 12 | #4 | 11-6 | 12 | #4 | 12-0 | 16 | #4 | 12-9 | 12 | #4 | 13-6 | 16 | #4 | 14-3 | 16 | #4 | 15-0 | 16 | #4 | 15-6 | 16 | #4 | 16-0 | 16 | #4 | 16-6 | 20 | #4 | 17-0 |
| b3 | str. | 4 | #4 | 10-3 | 4 | #4 | 11-3 | 4 | #4 | 9-0 | 4 | #4 | 13-3 | 4 | #4 | 11-6 | 4 | #4 | 12-3 | 4 | #4 | 13-6 | 4 | #4 | 14-6 | 4 | #4 | 15-6 | 4 | #4 | 13-6 |
| b4 | str. | 4 | #4 | 7-0 | 4 | #4 | 8-0 | 4 | #4 | 6-0 | 4 | #4 | 10-3 | 4 | #4 | 8-3 | 4 | #4 | 9-3 | 4 | #4 | 10-3 | 4 | #4 | 11-3 | 4 | #4 | 12-3 | 4 | #4 | 10-3 |
| b5 | str. | 4 | #4 | 3-9 | 4 | #4 | 4-9 | 4 | #4 | 2-9 | 4 | #4 | 7-0 | 4 | #4 | 5-0 | 4 | #4 | 6-0 | 4 | #4 | 7-0 | 4 | #4 | 8-3 | 4 | #4 | 9-0 | 4 | #4 | 7-0 |
| b6 | str. | | | | | | | | | | 4 | #4 | 3-9 | | | | 4 | #4 | 2-6 | 4 | #4 | 3-9 | 4 | #4 | 5-0 | 4 | #4 | 6-0 | 4 | #4 | 3-9 |
| c | str. | 4 | #4 | 10-6 | 4 | #4 | 11-0 | 4 | #4 | 11-6 | 4 | #4 | 12-0 | 4 | #4 | 12-6 | 4 | #4 | 13-0 | 4 | #4 | 13-6 | 4 | #4 | 14-0 | 4 | #4 | 14-6 | 4 | #4 | 15-0 |
| d | A | 6 | #6 | 12-3 | 6 | #7 | 12-9 | 6 | #7 | 13-3 | 6 | #7 | 13-9 | 6 | #8 | 14-6 | 6 | #8 | 15-0 | 6 | #8 | 15-6 | 6 | #8 | 16-0 | 6 | #8 | 16-6 | 6 | #8 | 17-0 |
| e1 | str. | 6 | #4 | 1-9 | 6 | #4 | 2-0 | 6 | #4 | 2-0 | 6 | #4 | 2-0 | 6 | #4 | 2-3 | 6 | #4 | 2-3 | 6 | #4 | 2-3 | 6 | #4 | 2-6 | 6 | #4 | 2-6 | 6 | #4 | 2-9 |
| e2 | str. | 6 | #4 | 2-6 | 6 | #4 | 2-6 | 6 | #4 | 2-9 | 6 | #4 | 2-9 | 6 | #4 | 2-9 | 6 | #4 | 3-0 | 6 | #4 | 3-0 | 6 | #4 | 3-3 | 6 | #4 | 3-3 | 6 | #4 | 3-6 |
| e3 | str. | 6 | #4 | 3-3 | 6 | #4 | 3-3 | 6 | #4 | 3-3 | 6 | #4 | 3-6 | 6 | #4 | 3-6 | 6 | #4 | 3-9 | 6 | #5 | 3-9 | 6 | #5 | 4-0 | 6 | #5 | 4-0 | 6 | #5 | 4-3 |
| e4 | str. | 4 | #4 | 3-9 | 4 | #4 | 4-0 | 6 | #5 | 4-0 | 6 | #5 | 4-3 | 6 | #5 | 4-3 | 6 | #5 | 4-3 | 6 | #6 | 4-6 | 6 | #6 | 4-9 | 6 | #6 | 4-9 | 6 | #6 | 4-9 |
| e5 | str. | 4 | #4 | 4-3 | 4 | #5 | 4-6 | 4 | #5 | 4-9 | 6 | #6 | 4-9 | 6 | #6 | 5-0 | 4 | #6 | 5-0 | 6 | #7 | 5-0 | 6 | #7 | 5-3 | 6 | #7 | 5-3 | 6 | #7 | 5-6 |
| e6 | str. | | | | | | | | | | | | | | | | 4 | #7 | 5-6 | 4 | #7 | 5-9 | 4 | #7 | 6-0 | 6 | #8 | 6-0 | 6 | #8 | 6-3 |
| e7 | str. | 4 | #4 | 4-3 | 4 | #5 | 4-6 | 4 | #5 | 4-9 | 4 | #6 | 4-9 | 6 | #6 | 5-0 | 6 | #7 | 5-6 | 6 | #7 | 5-9 | 6 | #7 | 6-0 | 6 | #8 | 6-0 | 6 | #8 | 6-3 |
| e8 | str. | 8 | #4 | 4-3 | 8 | #5 | 4-6 | 9 | #5 | 4-9 | 9 | #6 | 4-9 | 10 | #6 | 5-0 | 10 | #7 | 5-6 | 10 | #7 | 5-9 | 10 | #7 | 6-0 | 11 | #8 | 6-0 | 12 | #8 | 6-3 |
| f1 | str. | 6 | #4 | 5-6 | 6 | #4 | 5-6 | 6 | #4 | 6-0 | 6 | #4 | 5-9 | 6 | #4 | 6-3 | 6 | #4 | 6-3 | 6 | #4 | 6-6 | 6 | #4 | 6-9 | 6 | #4 | 7-0 | 6 | #4 | 7-3 |
| f2 | str. | 6 | #4 | 7-6 | 6 | #4 | 7-9 | 6 | #4 | 8-0 | 6 | #4 | 8-0 | 6 | #4 | 8-3 | 6 | #4 | 8-3 | 6 | #4 | 8-9 | 6 | #4 | 9-0 | 6 | #4 | 9-0 | 6 | #4 | 9-6 |
| f3 | str. | 6 | #4 | 9-6 | 6 | #4 | 9-9 | 6 | #4 | 10-3 | 4 | #4 | 10-0 | 4 | #4 | 10-6 | 6 | #4 | 10-6 | 6 | #4 | 10-9 | 6 | #4 | 11-3 | 6 | #4 | 11-3 | 6 | #4 | 11-6 |
| f4 | str. | | | | | | | | | | 4 | #4 | 11-6 | 4 | #4 | 11-9 | 4 | #4 | 12-6 | 4 | #4 | 13-0 | 4 | #4 | 13-3 | 6 | #4 | 13-3 | 6 | #4 | 13-9 |
| u | B | 6 | #4 | 4-6 | 6 | #4 | 4-9 | 7 | #4 | 4-9 | 7 | #4 | 4-9 | 7 | #4 | 4-9 | 8 | #4 | 5-0 | 8 | #4 | 5-0 | 8 | #4 | 5-0 | 8 | #4 | 5-0 | 9 | #4 | 5-0 |
| m | str. | 8 | #4 | 14-6 | 8 | #4 | 14-9 | 8 | #4 | 15-9 | 8 | #4 | 16-6 | 8 | #4 | 17-3 | 8 | #4 | 18-3 | 8 | #4 | 18-9 | 10 | #4 | 19-6 | 10 | #4 | 20-6 | 10 | #4 | 21-6 |
| n | str. | 5 | #4 | 12-6 | 5 | #4 | 13-6 | 5 | #4 | 14-0 | 5 | #4 | 14-6 | 5 | #4 | 15-0 | 5 | #4 | 16-0 | 5 | #4 | 17-0 | 5 | #4 | 18-0 | 5 | #4 | 17-0 | 5 | #4 | 18-0 |
| p | str. | 4 | #5 | 10-0 | 4 | #5 | 10-6 | 4 | #5 | 11-0 | 4 | #5 | 11-6 | 4 | #5 | 12-0 | 4 | #5 | 12-6 | 4 | #5 | 13-0 | 4 | #5 | 13-6 | 4 | #5 | 14-0 | 4 | #5 | 14-6 |
| q | str. | 2 | #6 | 12-0 | 2 | #6 | 12-6 | 2 | #6 | 13-0 | 2 | #6 | 13-6 | 2 | #6 | 14-0 | 2 | #6 | 14-6 | 2 | #6 | 15-0 | 2 | #6 | 15-6 | 2 | #6 | 16-0 | 2 | #6 | 16-6 |
| v | str. | 2 | #4 | 8-6 | 2 | #4 | 9-0 | 2 | #4 | 9-3 | 2 | #4 | 9-9 | 2 | #4 | 10-3 | 2 | #4 | 10-9 | 2 | #4 | 11-3 | 2 | #4 | 11-9 | 2 | #4 | 12-0 | 2 | #4 | 12-6 |
| w | str. | 2 | #4 | 12-0 | 2 | #4 | 12-6 | 2 | #4 | 13-3 | 2 | #4 | 13-9 | 2 | #4 | 14-6 | 2 | #4 | 15-3 | 2 | #4 | 15-9 | 2 | #4 | 16-3 | 2 | #4 | 16-9 | 2 | #4 | 17-3 |

## DIMENSIONS INLET END

| Pipe Dia | A | B | C | D | E | F | G | H | J | K | L | M | N |
|---|---|---|---|---|---|---|---|---|---|---|---|---|---|
| 90" | 5-2 | 2-1 | 1-7 | 1-5 | 5-1 | 11-0 | 4-11 | 9-6 | 5-8 | 13-7 7/8 | 6-6 7/8 | 4-5 5/8 | 0-3 |
| 96" | 5-5 | 2-2 | 1-8 | 1-6 | 5-4 | 11-6 | 5-2 | 10-0 | 6-0 | 14-2 3/4 | 6-10 3/4 | 4-8 1/4 | 0-6 |
| 102" | 5-8 | 2-2 | 1-10 | 1-7 | 5-7 | 12-0 | 5-5 | 10-6 | 6-3 | 14-10 | 7-3 | 4-11 1/4 | 0-3 |
| 108" | 5-11 | 2-3 | 1-11 | 1-8 | 5-10 | 12-9 | 5-8 | 11-0 | 6-7 | 15-7 3/4 | 7-6 7/8 | 5-1 3/4 | 0-1 1/2 |
| 114" | 6-2 | 2-3 | 2-1 | 1-9 | 6-1 | 13-6 | 5-11 | 11-6 | 6-10 | 16-6 | 7-11 | 5-4 3/4 | 0-6 |
| 120" | 6-5 | 2-4 | 2-2 | 1-10 | 6-4 | 14-0 | 6-2 | 12-0 | 7-1 | 17-0 7/8 | 8-2 7/8 | 5-7 3/8 | 0-3 |
| 126" | 6-10 3/4 | 2-6 | 2-2 | 1-11 | 6-7 | 14-6 | 6-5 | 12-6 | 7-5 | 17-8 | 8-7 1/8 | 5-10 3/8 | 0-6 |
| 132" | 7-1 3/4 | 2-7 | 2-3 | 2-0 | 6-10 | 15-0 | 6-8 | 13-0 | 7-9 | 18-2 7/8 | 8-10 7/8 | 6-1 | 0-3 |
| 138" | 7-4 3/4 | 2-7 | 2-5 | 2-1 | 7-1 | 15-6 | 6-11 | 13-6 | 8-0 | 18-10 1/4 | 9-3 1/8 | 6-4 | 0-6 |
| 144" | 7-7 3/4 | 2-8 | 2-6 | 2-2 | 7-4 | 16-0 | 7-2 | 14-0 | 8-4 | 19-5 | 9-7 | 6-6 1/2 | 0-3 |

## DIMENSIONS OUTLET END

| Pipe Dia | A | B | C | D | E | F | G | H | J | K | L | M | N |
|---|---|---|---|---|---|---|---|---|---|---|---|---|---|
| 90" | 5-6 5/8 | 2-1 | 0-11 | 2-1 | 5-1 | 11-6 | 4-11 | 9-6 | 4-2 | 15-3 5/8 | 7-8 5/8 | 4-1 7/8 | 0-6 |
| 96" | 5-9 5/8 | 2-2 | 0-11 | 2-3 | 5-4 | 12-0 | 5-2 | 10-0 | 4-4 | 15-11 | 8-1 | 4-4 1/4 | 0-3 |
| 102" | 6-0 5/8 | 2-2 | 1-0 | 2-5 | 5-7 | 12-9 | 5-5 | 10-6 | 4-6 | 16-10 1/8 | 8-6 1/8 | 4-7 1/4 | 0-1 1/2 |
| 108" | 6-3 5/8 | 2-3 | 1-1 | 2-6 | 5-10 | 13-6 | 5-8 | 11-0 | 4-8 | 17-8 1/2 | 8-10 1/2 | 4-9 1/2 | 0-6 |
| 114" | 6-6 5/8 | 2-3 | 1-2 | 2-8 | 6-1 | 14-3 | 5-11 | 11-6 | 4-10 | 18-7 5/8 | 9-3 5/8 | 5-0 1/2 | 0-4 1/2 |
| 120" | 6-9 5/8 | 2-4 | 1-3 | 2-9 | 6-4 | 15-0 | 6-2 | 12-0 | 5-0 | 19-6 | 9-8 | 5-2 3/4 | 0-3 |
| 126" | 7-2 3/4 | 2-6 | 1-3 | 2-10 | 6-7 | 15-6 | 6-5 | 12-6 | 5-3 | 10-2 1/8 | 10-1 1/8 | 5-5 3/4 | 0-6 |
| 132" | 7-5 3/4 | 2-6 | 1-4 | 3-0 | 6-10 | 16-0 | 6-8 | 13-0 | 5-6 | 20-10 1/4 | 10-6 1/4 | 5-8 3/4 | 0-3 |
| 138" | 7-8 3/4 | 2-7 | 1-5 | 3-1 | 7-1 | 16-6 | 6-11 | 13-6 | 5-9 | 21-5 5/8 | 10-10 5/8 | 5-11 1/8 | 0-6 |
| 144" | 7-11 3/4 | 2-8 | 1-6 | 3-2 | 7-4 | 17-0 | 7-2 | 14-0 | 6-0 | 22-1 | 11-3 | 6-1 3/8 | 0-3 |

## QUANTITIES

| Pipe Dia. | Inlet Reinf. (lbs) | Inlet Conc. (CY) | Outlet Reinf. (lbs) | Outlet Conc. (CY) |
|---|---|---|---|---|
| 90" | 1050 | 19.44 | 995 | 19.74 |
| 96" | 1160 | 21.19 | 1175 | 21.36 |
| 102" | 1375 | 23.00 | 1295 | 23.42 |
| 108" | 1645 | 25.19 | 1415 | 25.54 |
| 114" | 1815 | 27.49 | 1770 | 27.79 |
| 120" | 2020 | 29.50 | 2010 | 30.10 |
| 126" | 2330 | 34.35 | 2165 | 34.87 |
| 132" | 2590 | 36.74 | 2365 | 37.27 |
| 138" | 2870 | 39.22 | 2580 | 39.72 |
| 144" | 3120 | 41.75 | 2955 | 42.23 |

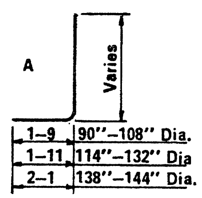


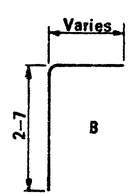


BENDS

NOTE:

Quantities and steel list shown are for one headwall

DESIGN APPROVED RC Brechler

APPROVED FOR DISTRIBUTION

ARIZONA
DEPARTMENT OF TRANSPORTATION
HIGHWAYS DIVISION
STANDARD PLANS

INLET AND OUTLET HEADWALLS
RIGHT ANGLE PIPE CULVERT
2:1 SLOPE

REVISION

STANDARD NO. PH-4

PLAN NO. B-12.30

DESIGN KW 9-72 | DRAWN LAM 9-72 | CHECKED RLC 9-72

## STEEL LIST - INLET END

| Mark | Bend | 90" Dia | | | 96" Dia | | | 102" Dia | | | 108" Dia | | | 114" Dia | | | 120" Dia | | | 126" Dia | | | 132" Dia | | | 138" Dia | | | 144" Dia | | |
|---|---|---|---|---|---|---|---|---|---|---|---|---|---|---|---|---|---|---|---|---|---|---|---|---|---|---|---|---|---|---|---|
| | | No | Size | Lgth | No | Size | Lgth | No | Size | Lgth | No | Size | Lgth | No | Size | Lgth | No | Size | Lgth | No | Size | Lgth | No | Size | Lgth | No | Size | Lgth | No | Size | Lgth |
| a1 | A | 8 | #5 | 10-0 | 6 | #5 | 11-3 | 8 | #5 | 10-9 | 8 | #6 | 11-0 | 8 | #6 | 11-6 | 6 | #6 | 12-0 | 8 | #6 | 12-3 | 8 | #7 | 12-9 | 8 | #7 | 13-3 | 8 | #8 | 13-9 |
| a2 | A | 8 | #5 | 10-9 | 6 | #5 | 11-0 | 6 | #6 | 11-6 | 6 | #6 | 11-9 | 8 | #6 | 12-3 | 6 | #6 | 12-6 | 6 | #7 | 13-0 | 6 | #7 | 13-6 | 8 | #8 | 14-0 | 8 | #8 | 14-6 |
| a3 | A | 6 | #6 | 11-6 | 6 | #6 | 11-6 | 6 | #6 | 12-0 | 6 | #7 | 12-3 | 6 | #7 | 13-0 | 6 | #7 | 13-0 | 6 | #7 | 13-6 | 6 | #8 | 14-0 | 6 | #8 | 14-9 | 8 | #8 | 15-0 |
| a4 | A | 6 | #6 | 12-0 | 6 | #6 | 12-0 | 6 | #7 | 12-6 | 6 | #7 | 13-0 | 6 | #8 | 13-9 | 6 | #8 | 13-9 | 6 | #8 | 14-3 | 6 | #8 | 14-6 | 6 | #8 | 15-3 | 6 | #8 | 15-9 |
| a5 | A | | | | 6 | #7 | 12-6 | 6 | #7 | 13-0 | 6 | #8 | 13-6 | 6 | #8 | 14-3 | 6 | #8 | 14-3 | 6 | #8 | 14-9 | 6 | #8 | 15-3 | 6 | #8 | 15-9 | 6 | #8 | 16-3 |
| a6 | A | | | | | | | | | | | | | | | | 6 | #8 | 14-9 | 6 | #8 | 15-3 | 6 | #8 | 15-9 | 6 | #8 | 16-3 | 6 | #8 | 16-9 |
| a7 | A | | | | | | | | | | | | | | | | | | | 6 | #4 | 4-6 | 12 | #4 | 5-0 | 18 | #4 | 5-6 | 26 | #4 | 6-0 |
| b1 | str | 4 | #4 | 13-6 | 4 | #4 | 14-3 | 4 | #4 | 15-0 | 4 | #4 | 15-9 | 4 | #4 | 16-6 | 4 | #4 | 17-3 | 4 | #4 | 18-0 | 4 | #4 | 18-9 | 4 | #4 | 19-6 | 4 | #4 | 20-3 |
| b2 | str | 20 | #4 | 13-3 | 20 | #4 | 14-0 | 24 | #4 | 14-9 | 24 | #4 | 15-6 | 24 | #4 | 16-3 | 24 | #4 | 17-0 | 28 | #4 | 17-9 | 28 | #4 | 18-6 | 28 | #4 | 19-3 | 28 | #4 | 20-0 |
| b3 | str | 4 | #4 | 9-0 | 4 | #4 | 11-0 | 4 | #4 | 6-3 | 4 | #4 | 9-0 | 4 | #4 | 11-9 | 4 | #4 | 14-9 | 4 | #4 | 8-9 | 4 | #4 | 3-6 | 4 | #4 | 14-9 | 4 | #4 | 17-6 |
| b4 | str | | | | 4 | #4 | 3-0 | | | | | | | 4 | #4 | 3-6 | 4 | #4 | 6-0 | | | | | | | 4 | #4 | 6-0 | 4 | #4 | 9-0 |
| b5 | str | | | | | | | | | | | | | | | | | | | | | | | | | | | | | | |
| c | str | 4 | #4 | 10-6 | 4 | #4 | 11-0 | 4 | #4 | 11-6 | 4 | #4 | 12-0 | 4 | #4 | 12-6 | 4 | #4 | 13-0 | 4 | #4 | 13-6 | 4 | #4 | 14-0 | 4 | #4 | 14-6 | 4 | #4 | 15-0 |
| d | A | 6 | #6 | 12-3 | 6 | #7 | 12-9 | 6 | #7 | 13-3 | 6 | #8 | 13-9 | 6 | #8 | 14-6 | 6 | #8 | 15-0 | 6 | #8 | 15-6 | 6 | #8 | 16-0 | 6 | #8 | 16-6 | 6 | #8 | 17-0 |
| e1 | str | 8 | #4 | 3-9 | 6 | #4 | 4-0 | 8 | #4 | 4-0 | 8 | #4 | 4-3 | 8 | #4 | 4-6 | 6 | #5 | 4-6 | 8 | #5 | 4-9 | 8 | #5 | 5-0 | 8 | #5 | 5-3 | 8 | #5 | 5-6 |
| e2 | str | 8 | #4 | 4-0 | 6 | #4 | 4-3 | 6 | #4 | 4-3 | 6 | #4 | 4-6 | 8 | #5 | 4-9 | 6 | #5 | 4-9 | 6 | #5 | 5-0 | 6 | #5 | 5-3 | 8 | #6 | 5-6 | 8 | #6 | 5-9 |
| e3 | str | 6 | #4 | 4-3 | 12 | #4 | 4-6 | 6 | #4 | 4-6 | 6 | #5 | 4-9 | 6 | #5 | 5-0 | 6 | #5 | 5-0 | 6 | #5 | 5-3 | 6 | #6 | 5-6 | 6 | #6 | 5-9 | 8 | #7 | 6-0 |
| e4 | str | 6 | #4 | 4-6 | 6 | #5 | 4-9 | 6 | #5 | 4-9 | 6 | #5 | 5-0 | 6 | #5 | 5-3 | 6 | #5 | 5-3 | 6 | #6 | 5-6 | 6 | #6 | 5-9 | 6 | #7 | 6-0 | 6 | #7 | 6-3 |
| e5 | str | | | | | | | 6 | #5 | 5-0 | 6 | #5 | 5-3 | 6 | #6 | 5-6 | 6 | #6 | 5-6 | 6 | #6 | 5-9 | 6 | #7 | 6-0 | 6 | #7 | 6-3 | 6 | #7 | 6-6 |
| e6 | str | | | | | | | | | | | | | | | | 6 | #6 | 5-9 | 6 | #7 | 6-0 | 6 | #7 | 6-3 | 6 | #7 | 6-6 | 6 | #8 | 6-9 |
| e7 | str | 4 | #4 | 4-6 | 4 | #5 | 4-9 | 4 | #5 | 5-0 | 4 | #5 | 5-3 | 6 | #6 | 5-6 | 6 | #6 | 5-9 | 6 | #7 | 6-0 | 6 | #7 | 6-3 | 6 | #7 | 6-6 | 6 | #8 | 6-9 |
| e8 | str | 10 | #4 | 4-6 | 10 | #5 | 4-9 | 11 | #5 | 5-0 | 11 | #5 | 5-3 | 12 | #6 | 5-6 | 12 | #6 | 5-9 | 13 | #7 | 6-0 | 13 | #7 | 6-3 | 13 | #7 | 6-6 | 14 | #8 | 6-9 |
| f1 | str | 8 | #4 | 8-3 | 8 | #4 | 8-6 | 8 | #4 | 9-0 | 8 | #4 | 9-3 | 6 | #4 | 9-9 | 6 | #4 | 10-0 | 8 | #4 | 10-6 | 8 | #4 | 10-9 | 8 | #4 | 11-3 | 8 | #4 | 11-6 |
| f2 | str | 6 | #4 | 9-3 | 6 | #4 | 9-6 | 8 | #4 | 10-0 | 8 | #4 | 10-6 | 6 | #4 | 10-6 | 6 | #4 | 11-0 | 6 | #4 | 11-6 | 6 | #4 | 12-0 | 8 | #4 | 12-3 | 8 | #4 | 12-9 |
| f3 | str | 6 | #4 | 10-3 | 6 | #4 | 10-6 | 6 | #4 | 11-3 | 6 | #4 | 11-6 | 6 | #4 | 11-3 | 6 | #4 | 11-9 | 6 | #4 | 12-3 | 6 | #4 | 12-9 | 6 | #4 | 13-3 | 6 | #4 | 13-6 |
| f4 | str | | | | | | | | | | | | | 6 | #4 | 12-0 | 6 | #4 | 12-6 | 6 | #4 | 13-0 | 6 | #4 | 13-6 | 6 | #4 | 14-0 | 6 | #4 | 14-6 |
| g | str | 2 | #4 | 12-6 | 2 | #4 | 13-6 | 2 | #4 | 14-0 | 2 | #4 | 14-6 | 2 | #4 | 15-3 | 2 | #4 | 16-0 | 2 | #4 | 16-9 | 2 | #4 | 17-3 | 2 | #4 | 18-0 | 2 | #4 | 18-6 |
| u | B | 7 | #4 | 4-6 | 7 | #4 | 4-9 | 8 | #4 | 4-9 | 8 | #4 | 4-9 | 8 | #4 | 4-9 | 8 | #4 | 5-0 | 9 | #4 | 5-0 | 9 | #4 | 5-0 | 9 | #4 | 5-0 | 10 | #4 | 5-0 |
| j | str | 2 | #4 | 9-3 | 2 | #4 | 9-6 | 2 | #4 | 10-0 | 2 | #4 | 10-6 | 2 | #4 | 11-0 | 2 | #4 | 11-6 | 2 | #4 | 12-0 | 2 | #4 | 12-6 | 2 | #4 | 13-0 | 2 | #4 | 13-6 |
| m | str | 8 | #4 | 16-0 | 8 | #4 | 16-6 | 8 | #4 | 17-6 | 8 | #4 | 18-6 | 8 | #4 | 19-0 | 8 | #4 | 20-0 | 8 | #4 | 21-0 | 10 | #4 | 21-9 | 10 | #4 | 22-6 | 10 | #4 | 23-6 |
| n | str | 5 | #4 | 12-9 | 5 | #4 | 13-6 | 5 | #4 | 14-0 | 5 | #4 | 14-6 | 5 | #4 | 15-3 | 5 | #4 | 16-0 | 5 | #4 | 16-6 | 5 | #4 | 17-3 | 5 | #4 | 18-0 | 5 | #4 | 18-9 |
| p | str | 4 | #5 | 10-0 | 4 | #5 | 10-6 | 4 | #5 | 11-0 | 4 | #5 | 11-6 | 4 | #5 | 12-0 | 4 | #5 | 12-6 | 4 | #5 | 13-0 | 4 | #5 | 13-6 | 4 | #5 | 14-0 | 4 | #5 | 14-6 |
| q | str | 2 | #6 | 12-0 | 2 | #6 | 12-6 | 2 | #6 | 13-0 | 2 | #6 | 13-6 | 2 | #6 | 14-0 | 2 | #6 | 14-6 | 2 | #6 | 15-0 | 2 | #6 | 15-6 | 2 | #6 | 16-0 | 2 | #6 | 16-6 |

## STEEL LIST - OUTLET END

| Mark | Bend | 90" Dia | | | 96" Dia | | | 102" Dia | | | 108" Dia | | | 114" Dia | | | 120" Dia | | | 126" Dia | | | 132" Dia | | | 138" Dia | | | 144" Dia | | |
|---|---|---|---|---|---|---|---|---|---|---|---|---|---|---|---|---|---|---|---|---|---|---|---|---|---|---|---|---|---|---|---|
| | | No | Size | Lgth | No | Size | Lgth | No | Size | Lgth | No | Size | Lgth | No | Size | Lgth | No | Size | Lgth | No | Size | Lgth | No | Size | Lgth | No | Size | Lgth | No | Size | Lgth |
| a1 | A | 8 | #4 | 9-0 | 6 | #4 | 9-6 | 6 | #5 | 9-9 | 8 | #5 | 10-0 | 8 | #5 | 10-6 | 8 | #6 | 11-0 | 6 | #6 | 11-3 | 8 | #6 | 11-6 | 8 | #6 | 12-3 | 8 | #7 | 12-6 |
| a2 | A | 8 | #5 | 10-3 | 6 | #5 | 10-3 | 6 | #5 | 10-6 | 6 | #6 | 11-3 | 8 | #6 | 11-6 | 8 | #6 | 12-0 | 6 | #6 | 12-0 | 6 | #7 | 12-6 | 6 | #7 | 13-3 | 8 | #8 | 13-6 |
| a3 | A | 6 | #6 | 11-3 | 6 | #6 | 11-0 | 6 | #6 | 11-6 | 6 | #6 | 12-0 | 6 | #7 | 12-6 | 6 | #7 | 13-0 | 6 | #7 | 12-9 | 6 | #7 | 13-3 | 6 | #8 | 14-0 | 6 | #8 | 14-6 |
| a4 | A | 6 | #6 | 12-0 | 6 | #6 | 11-9 | 6 | #6 | 12-3 | 6 | #7 | 12-9 | 6 | #7 | 13-3 | 6 | #8 | 13-9 | 6 | #8 | 13-6 | 6 | #8 | 14-3 | 6 | #8 | 15-0 | 6 | #8 | 15-3 |
| a5 | A | | | | 4 | #7 | 12-6 | 6 | #7 | 13-0 | 6 | #7 | 13-3 | 6 | #8 | 14-0 | 6 | #8 | 14-6 | 6 | #8 | 14-3 | 6 | #8 | 15-0 | 6 | #8 | 15-6 | 6 | #8 | 16-0 |
| a6 | A | | | | | | | | | | | | | | | | | | | 6 | #8 | 15-0 | 6 | #8 | 15-6 | 6 | #8 | 16-3 | 6 | #8 | 16-9 |
| a7 | A | | | | | | | | | | | | | | | | | | | 6 | #4 | 4-6 | 10 | #4 | 5-0 | 12 | #4 | 5-6 | 18 | #4 | 6-0 |
| b1 | str | 4 | #4 | 13-3 | 4 | #4 | 13-9 | 4 | #4 | 14-9 | 4 | #4 | 15-6 | 4 | #4 | 16-3 | 4 | #4 | 17-0 | 4 | #4 | 17-9 | 4 | #4 | 18-3 | 4 | #4 | 19-0 | 4 | #4 | 19-6 |
| b2 | str | 20 | #4 | 13-0 | 20 | #4 | 13-6 | 20 | #4 | 14-3 | 20 | #4 | 15-0 | 20 | #4 | 15-9 | 24 | #4 | 16-6 | 24 | #4 | 17-3 | 24 | #4 | 17-9 | 24 | #4 | 18-6 | 28 | #4 | 19-0 |
| b3 | str | 4 | #4 | 6-9 | 4 | #4 | 8-9 | 4 | #4 | 10-9 | 4 | #4 | 13-0 | 4 | #4 | 15-0 | 4 | #4 | 11-0 | 4 | #4 | 13-3 | 4 | #4 | 15-0 | 4 | #4 | 17-0 | 4 | #4 | 13-3 |
| b4 | str | | | | 4 | #4 | 3-0 | 4 | #4 | 5-0 | 4 | #4 | 7-0 | 4 | #4 | 9-0 | 4 | #4 | 5-0 | 4 | #4 | 7-0 | 4 | #4 | 9-0 | 4 | #4 | 11-0 | 4 | #4 | 7-3 |
| b5 | str | | | | | | | | | | | | | 4 | #4 | 3-0 | | | | | | | 4 | #4 | 3-0 | 4 | #4 | 5-0 | | | |
| b6 | str | | | | | | | | | | | | | | | | | | | | | | | | | | | | | | |
| c | str | 4 | #4 | 10-6 | 4 | #4 | 11-0 | 4 | #4 | 11-6 | 4 | #4 | 12-0 | 4 | #4 | 12-6 | 4 | #4 | 13-0 | 4 | #4 | 13-6 | 4 | #4 | 14-0 | 4 | #4 | 14-6 | 4 | #4 | 15-0 |
| d | A | 6 | #6 | 12-3 | 6 | #7 | 12-9 | 6 | #7 | 13-3 | 6 | #8 | 13-9 | 6 | #8 | 14-6 | 6 | #8 | 15-0 | 6 | #8 | 15-6 | 6 | #8 | 16-0 | 6 | #8 | 16-6 | 6 | #8 | 17-0 |
| e1 | str | 8 | #4 | 3-3 | 8 | #4 | 3-3 | 8 | #4 | 3-6 | 8 | #4 | 3-6 | 10 | #4 | 3-6 | 8 | #4 | 3-6 | 8 | #4 | 3-9 | 8 | #4 | 3-9 | 8 | #4 | 4-0 | 8 | #5 | 4-0 |
| e2 | str | 8 | #4 | 3-6 | 8 | #4 | 3-6 | 8 | #4 | 3-9 | 8 | #4 | 3-9 | 8 | #4 | 4-0 | 8 | #4 | 4-0 | 8 | #5 | 4-3 | 8 | #5 | 4-3 | 8 | #5 | 4-6 | 8 | #5 | 4-6 |
| e3 | str | 6 | #4 | 3-9 | 8 | #4 | 4-0 | 8 | #5 | 4-0 | 8 | #5 | 4-3 | 8 | #5 | 4-6 | 8 | #5 | 4-3 | 8 | #4 | 4-9 | 8 | #6 | 4-9 | 8 | #6 | 5-0 | 8 | #6 | 5-0 |
| e4 | str | 6 | #4 | 4-0 | 6 | #5 | 4-3 | 6 | #5 | 4-6 | 8 | #5 | 4-9 | 8 | #6 | 5-0 | 6 | #6 | 4-9 | 6 | #6 | 5-3 | 8 | #6 | 5-3 | 8 | #7 | 5-6 | 8 | #7 | 5-6 |
| e5 | str | | | | | | | | | | | | | | | | 6 | #6 | 5-3 | 6 | #7 | 5-9 | 6 | #7 | 5-9 | 8 | #7 | 6-0 | 8 | #8 | 6-3 |
| e6 | str | | | | | | | | | | | | | | | | | | | | | | | | | | | | | | |
| e7 | str | 4 | #4 | 4-0 | 4 | #5 | 4-3 | 4 | #5 | 4-6 | 4 | #5 | 4-9 | 6 | #6 | 5-0 | 6 | #6 | 5-3 | 6 | #7 | 5-9 | 6 | #7 | 6-0 | 8 | #7 | 6-3 | 8 | #8 | 6-6 |
| e8 | str | 9 | #4 | 4-0 | 10 | #5 | 4-3 | 11 | #5 | 4-6 | 11 | #5 | 4-9 | 12 | #6 | 5-0 | 12 | #6 | 5-3 | 13 | #7 | 5-9 | 13 | #7 | 6-0 | 13 | #7 | 6-3 | 14 | #8 | 6-6 |
| f1 | str | 6 | #4 | 7-6 | 8 | #4 | 8-0 | 8 | #4 | 8-3 | 8 | #4 | 8-3 | 8 | #4 | 8-9 | 6 | #4 | 9-3 | 6 | #4 | 9-6 | 8 | #4 | 9-9 | 8 | #4 | 10-0 | 8 | #4 | 10-6 |
| f2 | str | 6 | #4 | 8-9 | 6 | #4 | 9-0 | 6 | #4 | 9-9 | 8 | #4 | 10-0 | 8 | #4 | 10-3 | 6 | #4 | 10-3 | 6 | #4 | 10-6 | 6 | #4 | 11-3 | 6 | #4 | 11-6 | 6 | #4 | 12-0 |
| f3 | str | 6 | #4 | 9-9 | 6 | #4 | 10-3 | 6 | #4 | 10-9 | 6 | #4 | 11-3 | 6 | #4 | 11-9 | 6 | #4 | 11-3 | 6 | #4 | 11-9 | 6 | #4 | 12-3 | 6 | #4 | 12-6 | 6 | #4 | 13-3 |
| f4 | str | | | | | | | | | | | | | | | | 6 | #4 | 12-3 | 6 | #4 | 12-9 | 6 | #4 | 13-6 | 6 | #4 | 13-9 | 6 | #4 | 14-3 |
| u | B | 6 | #4 | 4-6 | 6 | #4 | 4-9 | 7 | #4 | 4-9 | 7 | #4 | 4-9 | 7 | #4 | 4-9 | 8 | #4 | 5-0 | 8 | #4 | 5-0 | 8 | #4 | 5-0 | 8 | #4 | 5-0 | 9 | #4 | 5-0 |
| m | str | 8 | #4 | 16-6 | 8 | #4 | 17-3 | 8 | #4 | 18-0 | 8 | #4 | 19-0 | 8 | #4 | 19-9 | 8 | #4 | 20-9 | 8 | #4 | 21-9 | 10 | #4 | 22-3 | 10 | #4 | 23-3 | 10 | #4 | 23-9 |
| n | str | 5 | #4 | 12-6 | 5 | #4 | 13-3 | 5 | #4 | 14-0 | 5 | #4 | 14-6 | 5 | #4 | 15-3 | 5 | #4 | 16-0 | 5 | #4 | 16-9 | 5 | #4 | 17-3 | 5 | #4 | 18-0 | 5 | #4 | 18-6 |
| p | str | 4 | #5 | 10-0 | 4 | #5 | 10-6 | 4 | #5 | 11-0 | 4 | #5 | 11-6 | 4 | #5 | 12-0 | 4 | #5 | 12-6 | 4 | #5 | 13-0 | 4 | #5 | 13-6 | 4 | #5 | 14-0 | 4 | #5 | 14-6 |
| q | str | 2 | #6 | 12-0 | 2 | #6 | 12-6 | 2 | #6 | 13-0 | 2 | #6 | 13-6 | 2 | #6 | 14-0 | 2 | #6 | 14-6 | 2 | #6 | 15-0 | 2 | #6 | 15-6 | 2 | #6 | 16-0 | 2 | #6 | 16-6 |
| v | str | 2 | #4 | 8-6 | 2 | #4 | 9-0 | 2 | #4 | 9-3 | 2 | #4 | 9-9 | 2 | #4 | 10-3 | 2 | #4 | 10-9 | 2 | #4 | 11-3 | 2 | #4 | 11-9 | 2 | #4 | 12-0 | 2 | #4 | 12-6 |
| w | str | 2 | #4 | 13-6 | 2 | #4 | 14-0 | 2 | #4 | 14-9 | 2 | #4 | 15-3 | 2 | #4 | 16-0 | 2 | #4 | 16-9 | 2 | #4 | 17-6 | 2 | #4 | 18-0 | 2 | #4 | 18-9 | 2 | #4 | 19-3 |

## DIMENSIONS INLET END

| Pipe Dia | A | B | C | D | E | F | G | H | J | K | L | M | N |
|---|---|---|---|---|---|---|---|---|---|---|---|---|---|
| 90" | 5-2 | 2-0 | 2-4 | 0-9 | 5-1 | 13-3 | 4-11 | 9-6 | 7-3 | 15-11 1/4 | 6-7 1/4 | 4-6 | 0-4 1/2 |
| 96" | 5-5 | 2-2 | 2-5 | 0-9 | 5-4 | 14-0 | 5-2 | 10-0 | 7-6 | 16-8 3/4 | 6-10 3/4 | 4-8 1/4 | 0-3 |
| 102" | 5-8 | 2-2 | 2-6 | 0-11 | 5-7 | 14-9 | 5-5 | 10-6 | 7-11 | 17-7 | 7-3 | 4-11 1/4 | 0-1 1/2 |
| 108" | 5-11 | 2-2 | 2-8 | 1-0 | 5-10 | 15-6 | 5-8 | 11-0 | 8-3 | 18-5 1/4 | 7-7 1/4 | 5-2 1/4 | 0-6 |
| 114" | 6-2 | 2-3 | 2-9 | 1-1 | 6-1 | 16-3 | 5-11 | 11-6 | 8-7 | 19-3 | 7-11 | 5-4 3/4 | 0-4 1/2 |
| 120" | 6-5 | 2-4 | 2-10 | 1-2 | 6-4 | 17-0 | 6-2 | 12-0 | 9-0 | 20-0 7/8 | 8-2 7/8 | 5-7 3/8 | 0-3 |
| 126" | 6-10 3/4 | 2-6 | 2-10 | 1-3 | 6-7 | 17-9 | 6-5 | 12-6 | 9-4 | 20-11 1/8 | 8-7 1/8 | 5-10 3/8 | 0-1 1/2 |
| 132" | 7-1 3/4 | 2-6 | 3-0 | 1-4 | 6-10 | 18-6 | 6-8 | 13-0 | 9-9 | 21-9 3/8 | 8-11 3/8 | 6-1 3/8 | 0-6 |
| 138" | 7-4 3/4 | 2-7 | 3-1 | 1-5 | 7-1 | 19-3 | 6-11 | 13-6 | 10-1 | 22-7 1/8 | 9-3 1/8 | 6-4 | 0-4 1/2 |
| 144" | 7-7 3/4 | 2-8 | 3-2 | 1-6 | 7-4 | 20-0 | 7-2 | 14-0 | 10-6 | 23-5 | 9-7 | 6-6 1/2 | 0-3 |

## DIMENSIONS OUTLET END

| Pipe Dia | A | B | C | D | E | F | G | H | J | K | L | M | N |
|---|---|---|---|---|---|---|---|---|---|---|---|---|---|
| 90" | 5-6 5/8 | 2-1 | 2-0 | 1-0 | 5-1 | 13-0 | 4-11 | 9-6 | 6-3 | 16-9 5/8 | 7-8 5/8 | 4-1 7/8 | 0-3 |
| 96" | 5-9 5/8 | 2-2 | 2-1 | 1-1 | 5-4 | 13-6 | 5-2 | 10-0 | 6-7 | 17-5 | 8-1 | 4-4 1/4 | 0-6 |
| 102" | 6-0 5/8 | 2-2 | 2-2 | 1-3 | 5-7 | 14-3 | 5-5 | 10-6 | 6-11 | 18-4 1/8 | 8-6 1/8 | 4-7 1/4 | 0-4 1/2 |
| 108" | 6-3 5/8 | 2-3 | 2-3 | 1-4 | 5-10 | 15-0 | 5-8 | 11-0 | 7-3 | 19-2 1/2 | 8-10 1/2 | 4-9 1/2 | 0-3 |
| 114" | 6-6 5/8 | 2-3 | 2-5 | 1-5 | 6-1 | 15-9 | 5-11 | 11-6 | 7-7 | 20-1 5/8 | 9-3 5/8 | 5-0 1/2 | 0-1 1/2 |
| 120" | 6-9 5/8 | 2-4 | 2-6 | 1-6 | 6-4 | 16-6 | 6-2 | 12-0 | 7-11 | 21-0 | 9-8 | 5-2 3/4 | 0-6 |
| 126" | 7-2 3/4 | 2-6 | 2-6 | 1-7 | 6-7 | 17-3 | 6-5 | 12-6 | 8-3 | 21-11 1/8 | 10-1 1/8 | 5-5 3/4 | 0-4 1/2 |
| 132" | 7-5 3/4 | 2-6 | 2-7 | 1-9 | 6-10 | 17-9 | 6-8 | 13-0 | 8-7 | 22-7 1/4 | 10-6 1/4 | 5-8 3/4 | 0-1 1/2 |
| 138" | 7-8 3/4 | 2-7 | 2-8 | 1-10 | 7-1 | 18-6 | 6-11 | 13-6 | 8-11 | 23-5 5/8 | 10-10 5/8 | 5-11 1/8 | 0-6 |
| 144" | 7-11 3/4 | 2-8 | 2-9 | 1-11 | 7-4 | 19-0 | 7-2 | 14-0 | 9-4 | 24-1 | 11-3 | 6-1 3/8 | 0-3 |

## QUANTITIES

| Pipe Dia. | Inlet Reinf. (lbs) | Inlet Conc. (CY) | Outlet Reinf. (lbs) | Outlet Conc. (CY) |
|---|---|---|---|---|
| 90" | 1255 | 23.17 | 1225 | 22.98 |
| 96" | 1510 | 25.37 | 1440 | 24.89 |
| 102" | 1725 | 27.71 | 1610 | 27.21 |
| 108" | 1995 | 30.18 | 1850 | 29.60 |
| 114" | 2310 | 32.68 | 2155 | 32.18 |
| 120" | 2595 | 35.33 | 2395 | 34.79 |
| 126" | 2935 | 41.39 | 2755 | 40.65 |
| 132" | 3235 | 44.57 | 3040 | 43.28 |
| 138" | 3625 | 47.72 | 3325 | 46.43 |
| 144" | 4125 | 51.07 | 3790 | 49.27 |

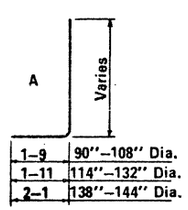


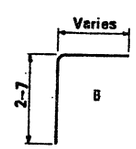


BENDS

NOTE:
Quantities and steel list shown are for one headwall.

| DESIGN | K W | 9-72 | DRAWN | LAM | 9-72 | CHECKED | RLC | 9-72 |
|---|---|---|---|---|---|---|---|---|

DESIGN APPROVED: R C Buehler

APPROVED FOR DISTRIBUTION

ARIZONA
DEPARTMENT OF TRANSPORTATION
HIGHWAYS DIVISION
STANDARD PLANS

INLET AND OUTLET HEADWALLS
RIGHT ANGLE PIPE CULVERT
4:1 SLOPE

REVISION

STANDARD NO. PH-5

PLAN NO. B-12.40

## STEEL LIST - INLET END

| Mark | Bend | 90" Dia | | | 96" Dia | | | 102" Dia | | | 108" Dia | | | 114" Dia | | | 120" Dia | | | 126" Dia | | | 132" Dia | | | 138" Dia | | | 144" Dia | | |
|---|---|---|---|---|---|---|---|---|---|---|---|---|---|---|---|---|---|---|---|---|---|---|---|---|---|---|---|---|---|---|---|
| | | No | Size | Lgth | No | Size | Lgth | No | Size | Lgth | No | Size | Lgth | No | Size | Lgth | No | Size | Lgth | No | Size | Lgth | No | Size | Lgth | No | Size | Lgth | No | Size | Lgth |
| a1 | A | 8 | #5 | 10-6 | 10 | #6 | 11-0 | 8 | #6 | 11-3 | 8 | #6 | 11-9 | 10 | #6 | 12-3 | 10 | #7 | 12-9 | 10 | #7 | 13-3 | 10 | #7 | 13-6 | 12 | #8 | 14-3 | 10 | #8 | 14-6 |
| a2 | A | 6 | #6 | 11-0 | 6 | #6 | 11-9 | 6 | #6 | 11-9 | 6 | #6 | 12-3 | 6 | #7 | 13-0 | 6 | #7 | 13-6 | 8 | #7 | 13-9 | 8 | #8 | 14-3 | 8 | #8 | 14-9 | 8 | #8 | 15-3 |
| a3 | A | 6 | #6 | 11-6 | 6 | #6 | 12-3 | 6 | #6 | 12-3 | 6 | #7 | 12-6 | 6 | #7 | 13-3 | 6 | #7 | 13-9 | 6 | #8 | 14-3 | 8 | #8 | 14-9 | 8 | #8 | 15-3 | 8 | #8 | 15-9 |
| a4 | A | 6 | #6 | 11-9 | 6 | #7 | 12-6 | 6 | #6 | 12-6 | 6 | #7 | 13-0 | 6 | #7 | 13-9 | 6 | #8 | 14-0 | 6 | #8 | 14-6 | 6 | #8 | 15-0 | 6 | #8 | 15-9 | 8 | #8 | 16-0 |
| a5 | A | 6 | #6 | 12-3 | 6 | #7 | 13-0 | 6 | #7 | 13-0 | 6 | #7 | 13-3 | 6 | #8 | 14-0 | 6 | #8 | 14-6 | 6 | #8 | 15-0 | 6 | #8 | 15-6 | 6 | #8 | 16-3 | 6 | #8 | 16-6 |
| a6 | A | | | | | | | 4 | #7 | 13-3 | 6 | #7 | 13-9 | 6 | #8 | 14-3 | 6 | #8 | 14-9 | 6 | #8 | 15-3 | 6 | #8 | 15-9 | 6 | #8 | 16-6 | 6 | #8 | 17-0 |
| a7 | A | | | | | | | | | | | | | | | | | | | 6 | #4 | 9-0 | 18 | #4 | 9-6 | 26 | #4 | 10-3 | 36 | #4 | 10-9 |
| b1 | str | 4 | #4 | 15-3 | 4 | #4 | 16-0 | 4 | #4 | 17-0 | 4 | #4 | 18-0 | 4 | #4 | 19-0 | 4 | #4 | 19-6 | 4 | #4 | 20-6 | 4 | #4 | 21-3 | 4 | #4 | 22-0 | 4 | #4 | 22-9 |
| b2 | str | 20 | #4 | 15-3 | 24 | #4 | 16-0 | 24 | #4 | 17-0 | 24 | #4 | 18-0 | 28 | #4 | 18-9 | 28 | #4 | 19-6 | 28 | #4 | 20-3 | 24 | #4 | 21-0 | 32 | #4 | 21-9 | 32 | #4 | 22-6 |
| b3 | str | 4 | #4 | 14-0 | 4 | #4 | 5-0 | 4 | #4 | 10-0 | 4 | #4 | 14-6 | 4 | #4 | 6-0 | 4 | #4 | 10-3 | 4 | #4 | 14-3 | 4 | #4 | 19-0 | 4 | #4 | 10-3 | 4 | #4 | 15-3 |
| b4 | str | | | | | | | | | | | | | | | | | | | | | | 4 | #4 | 8-3 | | | | 4 | #4 | 2-6 |
| b5 | str | | | | | | | | | | | | | | | | | | | | | | | | | | | | | | |
| c | str | 4 | #4 | 10-6 | 4 | #4 | 11-0 | 4 | #4 | 11-6 | 4 | #4 | 12-0 | 4 | #4 | 12-6 | 4 | #4 | 13-0 | 4 | #4 | 13-6 | 4 | #4 | 14-0 | 4 | #4 | 14-6 | 4 | #4 | 15-0 |
| d | A | 6 | #6 | 12-3 | 6 | #7 | 12-9 | 6 | #7 | 13-3 | 6 | #7 | 13-9 | 6 | #8 | 14-3 | 6 | #8 | 14-9 | 6 | #8 | 15-3 | 6 | #8 | 15-9 | 6 | #8 | 16-3 | 6 | #8 | 16-9 |
| e1 | str | 12 | #4 | 3-6 | 10 | #4 | 3-9 | 10 | #4 | 4-0 | 10 | #4 | 4-0 | 10 | #5 | 4-3 | 12 | #5 | 4-6 | 12 | #5 | 4-9 | 12 | #6 | 5-0 | 12 | #6 | 5-0 | 12 | #6 | 5-3 |
| e2 | str | 10 | #4 | 3-9 | 8 | #4 | 4-0 | 10 | #4 | 4-0 | 10 | #5 | 4-3 | 10 | #5 | 4-6 | 10 | #5 | 4-9 | 10 | #6 | 5-0 | 12 | #6 | 5-3 | 12 | #6 | 5-3 | 12 | #7 | 5-6 |
| e3 | str | 10 | #4 | 4-0 | 8 | #5 | 4-3 | 8 | #5 | 4-6 | 10 | #5 | 4-6 | 10 | #5 | 4-9 | 10 | #6 | 5-0 | 10 | #6 | 5-3 | 10 | #6 | 5-6 | 12 | #7 | 5-9 | 12 | #7 | 6-0 |
| e4 | str | | | | 8 | #5 | 4-6 | 8 | #5 | 4-9 | 8 | #5 | 4-9 | 10 | #6 | 5-0 | 10 | #6 | 5-3 | 10 | #7 | 5-6 | 10 | #7 | 5-9 | 12 | #7 | 6-0 | 12 | #8 | 6-3 |
| e5 | str | | | | | | | | | | | | | | | | | | | | | | | | | | | | | | |
| e6 | str | | | | | | | | | | | | | | | | | | | | | | | | | | | | | | |
| e7 | str | 4 | #4 | 4-0 | 4 | #5 | 4-6 | 4 | #5 | 4-9 | 4 | #5 | 4-9 | 4 | #6 | 5-0 | 4 | #6 | 5-3 | 6 | #7 | 5-6 | 6 | #7 | 5-9 | 8 | #7 | 6-0 | 8 | #8 | 6-3 |
| e8 | str | 10 | #4 | 4-0 | 10 | #5 | 4-6 | 11 | #5 | 4-9 | 11 | #5 | 4-9 | 12 | #6 | 5-0 | 12 | #6 | 5-3 | 13 | #7 | 5-6 | 13 | #7 | 5-9 | 14 | #7 | 6-0 | 14 | #8 | 6-3 |
| f1 | str | 8 | #4 | 8-9 | 8 | #4 | 9-3 | 8 | #4 | 9-6 | 8 | #4 | 10-0 | 8 | #4 | 10-6 | 8 | #4 | 10-9 | 8 | #4 | 11-3 | 8 | #4 | 11-9 | 8 | #4 | 12-0 | 8 | #4 | 12-6 |
| f2 | str | 8 | #4 | 9-6 | 8 | #4 | 10-3 | 8 | #4 | 10-3 | 6 | #4 | 10-9 | 6 | #4 | 11-3 | 8 | #4 | 11-6 | 8 | #4 | 12-0 | 8 | #4 | 12-6 | 8 | #4 | 12-9 | 8 | #4 | 13-3 |
| f3 | str | 6 | #4 | 10-3 | 6 | #4 | 11-0 | 8 | #4 | 11-0 | 6 | #4 | 11-3 | 6 | #4 | 11-9 | 6 | #4 | 12-3 | 6 | #4 | 12-9 | 8 | #4 | 13-0 | 8 | #4 | 13-6 | 8 | #4 | 14-0 |
| f4 | str | | | | | | | | | | 6 | #4 | 11-9 | 6 | #4 | 12-3 | 6 | #4 | 12-9 | 6 | #4 | 13-3 | 6 | #4 | 13-9 | 6 | #4 | 14-3 | 8 | #4 | 14-6 |
| g | str | 2 | #4 | 15-3 | 2 | #4 | 16-0 | 2 | #4 | 17-0 | 2 | #4 | 18-0 | 2 | #4 | 18-9 | 2 | #4 | 19-6 | 2 | #4 | 20-3 | 2 | #4 | 21-0 | 2 | #4 | 21-9 | 2 | #4 | 22-6 |
| u | B | 7 | #4 | 4-6 | 7 | #4 | 4-9 | 8 | #4 | 4-9 | 8 | #4 | 4-9 | 8 | #4 | 4-9 | 8 | #4 | 5-0 | 9 | #4 | 5-0 | 9 | #4 | 5-0 | 9 | #4 | 5-0 | 10 | #4 | 5-0 |
| j | str | 2 | #4 | 9-3 | 2 | #4 | 9-6 | 2 | #4 | 10-0 | 2 | #4 | 10-6 | 2 | #4 | 11-0 | 2 | #4 | 11-3 | 2 | #4 | 11-9 | 2 | #4 | 12-3 | 2 | #4 | 12-9 | 2 | #4 | 13-3 |
| m | str | 8 | #4 | 18-0 | 8 | #4 | 18-9 | 8 | #4 | 19-9 | 8 | #4 | 21-0 | 10 | #4 | 21-9 | 10 | #4 | 22-6 | 10 | #4 | 23-6 | 10 | #4 | 24-3 | 10 | #4 | 25-3 | 10 | #4 | 26-0 |
| n | str | 5 | #4 | 12-9 | 5 | #4 | 13-6 | 5 | #4 | 14-0 | 5 | #4 | 14-6 | 5 | #4 | 15-3 | 5 | #4 | 16-0 | 5 | #4 | 16-6 | 5 | #4 | 17-3 | 5 | #4 | 18-0 | 5 | #4 | 18-9 |
| p | str | 4 | #5 | 10-0 | 4 | #5 | 10-6 | 4 | #5 | 11-0 | 4 | #5 | 11-6 | 4 | #5 | 12-0 | 4 | #5 | 12-6 | 4 | #5 | 13-0 | 4 | #5 | 13-6 | 4 | #5 | 14-0 | 4 | #5 | 14-6 |
| q | str | 2 | #6 | 12-0 | 2 | #6 | 12-6 | 2 | #6 | 13-0 | 2 | #6 | 13-6 | 2 | #6 | 14-0 | 2 | #6 | 14-6 | 2 | #6 | 15-0 | 2 | #6 | 15-6 | 2 | #6 | 16-0 | 2 | #6 | 16-6 |

## STEEL LIST - OUTLET END

| Mark | Bend | 90" Dia | | | 96" Dia | | | 102" Dia | | | 108" Dia | | | 114" Dia | | | 120" Dia | | | 126" Dia | | | 132" Dia | | | 138" Dia | | | 144" Dia | | |
|---|---|---|---|---|---|---|---|---|---|---|---|---|---|---|---|---|---|---|---|---|---|---|---|---|---|---|---|---|---|---|---|
| | | No | Size | Lgth | No | Size | Lgth | No | Size | Lgth | No | Size | Lgth | No | Size | Lgth | No | Size | Lgth | No | Size | Lgth | No | Size | Lgth | No | Size | Lgth | No | Size | Lgth |
| a1 | A | 8 | #5 | 10-3 | 8 | #5 | 10-9 | 8 | #5 | 11-0 | 8 | #6 | 11-3 | 8 | #6 | 11-9 | 8 | #6 | 12-0 | 8 | #7 | 12-6 | 8 | #7 | 13-0 | 10 | #7 | 13-9 | 10 | #8 | 14-0 |
| a2 | A | 8 | #5 | 11-0 | 8 | #6 | 11-6 | 8 | #6 | 11-9 | 8 | #6 | 12-0 | 8 | #6 | 12-6 | 8 | #7 | 12-9 | 8 | #7 | 13-3 | 8 | #8 | 13-9 | 8 | #8 | 14-6 | 10 | #8 | 15-0 |
| a3 | A | 8 | #6 | 11-9 | 8 | #6 | 12-0 | 6 | #6 | 12-3 | 6 | #7 | 12-6 | 8 | #7 | 13-0 | 8 | #7 | 13-6 | 8 | #8 | 13-9 | 8 | #8 | 14-3 | 8 | #8 | 15-0 | 8 | #8 | 15-9 |
| a4 | A | 6 | #6 | 12-3 | 8 | #6 | 12-6 | 6 | #7 | 12-9 | 6 | #7 | 13-0 | 6 | #7 | 13-6 | 8 | #8 | 14-0 | 8 | #8 | 14-6 | 8 | #8 | 15-0 | 8 | #8 | 15-9 | 8 | #8 | 16-6 |
| a5 | A | | | | | | | 6 | #7 | 13-0 | 6 | #7 | 13-6 | 6 | #8 | 14-0 | 6 | #8 | 14-6 | 8 | #8 | 15-0 | 8 | #8 | 15-6 | 8 | #8 | 16-3 | 8 | #8 | 17-0 |
| a6 | A | | | | | | | | | | | | | | | | | | | | | | | | | | | | | | |
| a7 | A | | | | | | | | | | | | | | | | | | | | | | | | | | | | | | |
| b1 | str | 4 | #4 | 14-3 | 4 | #4 | 15-3 | 4 | #4 | 16-0 | 4 | #4 | 16-9 | 4 | #4 | 17-6 | 4 | #4 | 18-3 | 8 | #4 | 9-0 | 16 | #4 | 9-6 | 20 | #4 | 10-3 | 24 | #4 | 10-9 |
| b2 | str | 20 | #4 | 14-3 | 20 | #4 | 15-0 | 24 | #4 | 15-9 | 24 | #4 | 16-6 | 24 | #4 | 17-3 | 24 | #4 | 18-0 | 4 | #4 | 19-0 | 4 | #4 | 19-9 | 4 | #4 | 20-6 | 4 | #4 | 21-3 |
| b3 | str | 4 | #4 | 8-6 | 4 | #4 | 13-6 | 4 | #4 | 6-3 | 4 | #4 | 10-9 | 4 | #4 | 13-3 | 4 | #4 | 16-9 | 28 | #4 | 18-9 | 28 | #4 | 19-6 | 28 | #4 | 20-3 | 28 | #4 | 21-0 |
| b4 | str | | | | 4 | #4 | 4-3 | | | | | | | 4 | #4 | 4-3 | 4 | #4 | 7-6 | 4 | #4 | 10-9 | 4 | #4 | 14-0 | 4 | #4 | 16-6 | 4 | #4 | 20-6 |
| b5 | str | | | | | | | | | | | | | | | | | | | | | | 4 | #4 | 4-3 | 4 | #4 | 7-3 | 4 | #4 | 10-9 |
| b6 | str | | | | | | | | | | | | | | | | | | | | | | | | | | | | | | |
| c | str | 4 | #4 | 10-6 | 4 | #4 | 11-0 | 4 | #4 | 11-6 | 4 | #4 | 12-0 | 4 | #4 | 12-6 | 4 | #4 | 13-0 | 4 | #4 | 13-6 | 4 | #4 | 14-0 | 4 | #4 | 14-6 | 4 | #4 | 15-0 |
| d | A | 6 | #6 | 12-3 | 6 | #6 | 12-9 | 6 | #7 | 13-3 | 6 | #7 | 13-9 | 6 | #8 | 14-6 | 6 | #8 | 15-0 | 6 | #8 | 15-6 | 6 | #8 | 16-0 | 6 | #8 | 16-6 | 6 | #8 | 17-0 |
| e1 | str | 8 | #4 | 3-6 | 8 | #4 | 3-9 | 8 | #4 | 3-9 | 8 | #4 | 3-9 | 8 | #4 | 4-0 | 8 | #5 | 4-3 | 8 | #5 | 4-3 | 10 | #5 | 4-6 | 10 | #5 | 4-6 | 10 | #6 | 4-6 |
| e2 | str | 8 | #4 | 3-9 | 8 | #4 | 4-0 | 8 | #4 | 4-0 | 8 | #4 | 4-0 | 8 | #5 | 4-3 | 8 | #5 | 4-6 | 8 | #5 | 4-6 | 8 | #6 | 4-9 | 8 | #6 | 5-0 | 10 | #6 | 5-0 |
| e3 | str | 8 | #4 | 4-0 | 8 | #4 | 4-3 | 6 | #4 | 4-3 | 8 | #5 | 4-3 | 8 | #5 | 4-6 | 8 | #5 | 4-9 | 8 | #6 | 4-9 | 8 | #6 | 5-3 | 8 | #6 | 5-3 | 8 | #7 | 5-3 |
| e4 | str | 6 | #4 | 4-3 | 8 | #5 | 4-6 | 6 | #5 | 4-3 | 6 | #5 | 4-6 | 6 | #5 | 4-9 | 8 | #6 | 5-0 | 8 | #6 | 5-3 | 8 | #6 | 5-6 | 8 | #7 | 5-6 | 8 | #7 | 5-9 |
| e5 | str | | | | | | | 6 | #5 | 4-6 | 6 | #5 | 4-9 | 6 | #6 | 5-0 | 6 | #6 | 5-3 | 8 | #7 | 5-6 | 8 | #7 | 5-9 | 8 | #7 | 6-0 | 8 | #8 | 6-3 |
| e6 | str | | | | | | | | | | | | | | | | | | | | | | | | | | | | | | |
| e7 | str | 4 | #4 | 4-3 | 4 | #5 | 4-6 | 4 | #5 | 4-6 | 4 | #5 | 4-9 | 6 | #6 | 5-0 | 6 | #6 | 5-3 | 6 | #7 | 5-6 | 6 | #7 | 5-9 | 8 | #7 | 6-0 | 8 | #8 | 6-3 |
| e8 | str | 10 | #4 | 4-3 | 10 | #5 | 4-6 | 11 | #5 | 4-6 | 11 | #5 | 4-9 | 12 | #6 | 5-0 | 12 | #6 | 5-3 | 13 | #7 | 5-6 | 13 | #7 | 5-9 | 14 | #7 | 6-0 | 14 | #8 | 6-3 |
| f1 | str | 8 | #4 | 8-6 | 8 | #4 | 9-0 | 8 | #4 | 9-3 | 6 | #4 | 9-6 | 6 | #4 | 10-0 | 8 | #4 | 10-3 | 8 | #4 | 10-9 | 8 | #4 | 11-0 | 8 | #4 | 11-6 | 8 | #4 | 12-0 |
| f2 | str | 6 | #4 | 9-3 | 8 | #4 | 9-9 | 8 | #4 | 10-3 | 6 | #4 | 10-6 | 6 | #4 | 10-6 | 6 | #4 | 11-3 | 6 | #4 | 11-9 | 8 | #4 | 12-0 | 8 | #4 | 12-6 | 8 | #4 | 12-9 |
| f3 | str | 6 | #4 | 10-0 | 6 | #4 | 10-9 | 6 | #4 | 11-0 | 6 | #4 | 11-0 | 6 | #4 | 11-3 | 6 | #4 | 12-0 | 6 | #4 | 12-6 | 6 | #4 | 13-0 | 6 | #4 | 13-3 | 8 | #4 | 13-9 |
| f4 | str | | | | | | | | | | 6 | #4 | 11-6 | 6 | #4 | 12-0 | 6 | #4 | 12-9 | 6 | #4 | 13-0 | 6 | #4 | 13-9 | 6 | #4 | 14-0 | 6 | #4 | 14-6 |
| u | B | 6 | #4 | 4-6 | 6 | #4 | 4-9 | 7 | #4 | 4-9 | 7 | #4 | 4-9 | 7 | #4 | 4-9 | 8 | #4 | 5-0 | 8 | #4 | 5-0 | 8 | #4 | 5-0 | 8 | #4 | 5-0 | 9 | #4 | 5-0 |
| m | str | 8 | #4 | 17-9 | 8 | #4 | 18-9 | 8 | #4 | 19-9 | 8 | #4 | 20-6 | 8 | #4 | 21-6 | 10 | #4 | 22-3 | 10 | #4 | 23-3 | 10 | #4 | 24-3 | 10 | #4 | 25-0 | 10 | #4 | 25-9 |
| n | str | 5 | #4 | 15-0 | 5 | #4 | 15-9 | 5 | #4 | 16-6 | 5 | #4 | 17-3 | 5 | #4 | 18-0 | 5 | #4 | 18-9 | 5 | #4 | 19-6 | 5 | #4 | 20-3 | 5 | #4 | 21-0 | 5 | #4 | 21-9 |
| p | str | 4 | #5 | 10-0 | 4 | #5 | 10-6 | 4 | #5 | 11-0 | 4 | #5 | 11-6 | 4 | #5 | 12-0 | 4 | #5 | 12-6 | 4 | #5 | 13-0 | 4 | #5 | 13-6 | 4 | #5 | 14-0 | 4 | #5 | 14-6 |
| q | str | 2 | #6 | 12-0 | 2 | #6 | 12-6 | 2 | #6 | 13-0 | 2 | #6 | 13-6 | 2 | #6 | 14-0 | 2 | #6 | 14-6 | 2 | #6 | 15-0 | 2 | #6 | 15-6 | 2 | #6 | 16-0 | 2 | #6 | 16-6 |
| v | str | 2 | #4 | 8-6 | 2 | #4 | 9-0 | 2 | #4 | 9-3 | 2 | #4 | 9-9 | 2 | #4 | 10-3 | 2 | #4 | 10-9 | 2 | #4 | 11-3 | 2 | #4 | 11-9 | 2 | #4 | 12-0 | 2 | #4 | 12-6 |
| w | str | 2 | #4 | 14-9 | 2 | #4 | 15-6 | 2 | #4 | 16-3 | 2 | #4 | 16-9 | 2 | #4 | 17-6 | 2 | #4 | 18-3 | 2 | #4 | 19-0 | 2 | #4 | 19-9 | 2 | #4 | 20-6 | 2 | #4 | 21-3 |

## DIMENSIONS INLET END

| Pipe Dia | A | B | C | D | E | F | G | H | J | K | L | M | N |
|---|---|---|---|---|---|---|---|---|---|---|---|---|---|
| 90" | 5-2 | 2-0 | 2-6 | 0-7 | 5-1 | 15-3 | 4-11 | 9-6 | 7-8 | 17-11 1/4 | 6-7 1/4 | 4-6 | 0-4 1/2 |
| 96" | 5-5 | 2-2 | 2-7 | 0-7 | 5-4 | 16-0 | 5-2 | 10-0 | 8-1 | 18-8 3/4 | 6-10 3/4 | 4-8 1/4 | 0-3 |
| 102" | 5-8 | 2-2 | 2-8 | 0-9 | 5-7 | 17-0 | 5-5 | 10-6 | 8-6 | 19-10 | 7-3 | 4-11 1/4 | 0-3 |
| 108" | 5-11 | 2-2 | 2-11 | 0-9 | 5-10 | 18-0 | 5-8 | 11-0 | 8-11 | 20-11 1/8 | 7-7 1/4 | 5-2 1/4 | 0-3 |
| 114" | 6-2 | 2-3 | 2-11 | 0-11 | 6-1 | 18-9 | 5-11 | 11-6 | 9-4 | 21-9 | 7-11 | 5-4 3/4 | 0-1 1/2 |
| 120" | 6-5 | 2-4 | 3-1 | 0-11 | 6-4 | 19-6 | 6-2 | 12-0 | 9-9 | 22-6 7/8 | 8-2 7/8 | 5-7 3/8 | 0-6 |
| 126" | 6-10 3/4 | 2-6 | 3-1 | 1-0 | 6-7 | 20-3 | 6-5 | 12-6 | 10-2 | 23-5 | 8-7 1/8 | 5-10 3/8 | 0-4 1/2 |
| 132" | 7-1 3/4 | 2-6 | 3-4 | 1-0 | 6-10 | 21-0 | 6-8 | 13-0 | 10-7 | 24-3 3/8 | 8-11 3/8 | 6-1 3/8 | 0-3 |
| 138" | 7-4 3/4 | 2-7 | 3-5 | 1-1 | 7-1 | 21-9 | 6-11 | 13-6 | 11-0 | 25-1 1/4 | 9-3 1/8 | 6-4 | 0-1 1/2 |
| 144" | 7-7 3/4 | 2-8 | 3-7 | 1-1 | 7-4 | 22-6 | 7-2 | 14-0 | 11-5 | 25-11 | 9-7 | 6-6 1/2 | 0-6 |

## DIMENSIONS OUTLET END

| Pipe Dia | A | B | C | D | E | F | G | H | J | K | L | M | N |
|---|---|---|---|---|---|---|---|---|---|---|---|---|---|
| 90" | 5-6 5/8 | 2-1 | 2-6 | 0-6 | 5-1 | 14-3 | 4-11 | 9-6 | 7-3 | 18-0 5/8 | 7-8 5/8 | 4-1 7/8 | 0-4 1/2 |
| 96" | 5-9 5/8 | 2-2 | 2-7 | 0-7 | 5-4 | 15-0 | 5-2 | 10-0 | 7-8 | 18-11 | 8-1 | 4-4 1/4 | 0-3 |
| 102" | 6-0 5-8 | 2-2 | 2-8 | 0-9 | 5-7 | 15-9 | 5-5 | 10-6 | 8-0 | 19-10 1/8 | 8-6 1/8 | 4-7 1/4 | 0-1 1/2 |
| 108" | 6-3 5/8 | 2-3 | 2-9 | 0-10 | 5-10 | 16-6 | 5-8 | 11-0 | 8-5 | 20-8 1/2 | 8-10 1/2 | 4-9 1/2 | 0-6 |
| 114" | 6-6 5/8 | 2-3 | 2-10 | 1-0 | 6-1 | 17-3 | 5-11 | 11-6 | 8-9 | 21-7 5/8 | 9-3 5/8 | 5-0 1/2 | 0-4 1/2 |
| 120" | 6-9 5/8 | 2-4 | 3-0 | 1-0 | 6-4 | 18-0 | 6-2 | 12-0 | 9-2 | 22-6 | 9-8 | 5-2 3/4 | 0-3 |
| 126" | 7-2 3/4 | 2-6 | 2-11 | 1-2 | 6-7 | 18-9 | 6-5 | 12-6 | 9-7 | 23-5 1/8 | 10-1 1/8 | 5-5 3/4 | 0-1 1/2 |
| 132" | 7-5 3/4 | 2-6 | 3-0 | 1-4 | 6-10 | 19-6 | 6-8 | 13-0 | 10-0 | 24-4 1/4 | 10-6 1/4 | 5-8 3/4 | 0-6 |
| 138" | 7-8 3/4 | 2-7 | 3-2 | 1-4 | 7-1 | 20-3 | 6-11 | 13-6 | 10-4 | 25-2 5/8 | 10-10 5/8 | 5-11 1/8 | 0-4 1/2 |
| 144" | 7-11 3/4 | 2/8 | 3-4 | 1-4 | 7-4 | 21-0 | 7-2 | 14-0 | 10-9 | 26-1 | 11-3 | 6-1 3/8 | 0-3 |

## QUANTITIES

| Pipe Dia. | Inlet Reinf. (lbs) | Inlet Conc. (CY) | Outlet Reinf. (lbs) | Outlet Conc. (CY) |
|---|---|---|---|---|
| 90" | 1455 | 25.92 | 1365 | 25.26 |
| 96" | 1810 | 28.34 | 1590 | 27.68 |
| 102" | 1935 | 31.13 | 1840 | 30.05 |
| 108" | 2215 | 34.21 | 2050 | 32.63 |
| 114" | 2705 | 36.84 | 2395 | 35.27 |
| 120" | 2990 | 39.76 | 2785 | 38.12 |
| 126" | 3395 | 46.47 | 3275 | 44.48 |
| 132" | 3835 | 49.94 | 3700 | 47.74 |
| 138" | 4335 | 53.37 | 3850 | 51.13 |
| 144" | 4760 | 57.01 | 4460 | 54.70 |

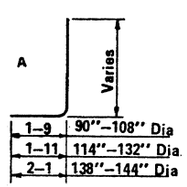


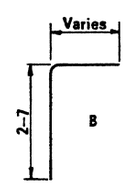


BENDS

NOTE:

Quantities and steel list shown are for one headwall.

| DESIGN | KW | 9-72 | DRAWN | LAM | 9-72 | CHECKED | RLC | 9-72 |
|---|---|---|---|---|---|---|---|---|

DESIGN APPROVED: RC Buehler

APPROVED FOR DISTRIBUTION

ARIZONA
DEPARTMENT OF TRANSPORTATION
HIGHWAYS DIVISION
STANDARD PLANS

INLET AND OUTLET HEADWALLS
RIGHT ANGLE PIPE CULVERT
6:1 SLOPE

REVISION

STANDARD NO. PH-6

PLAN NO. B-12.50

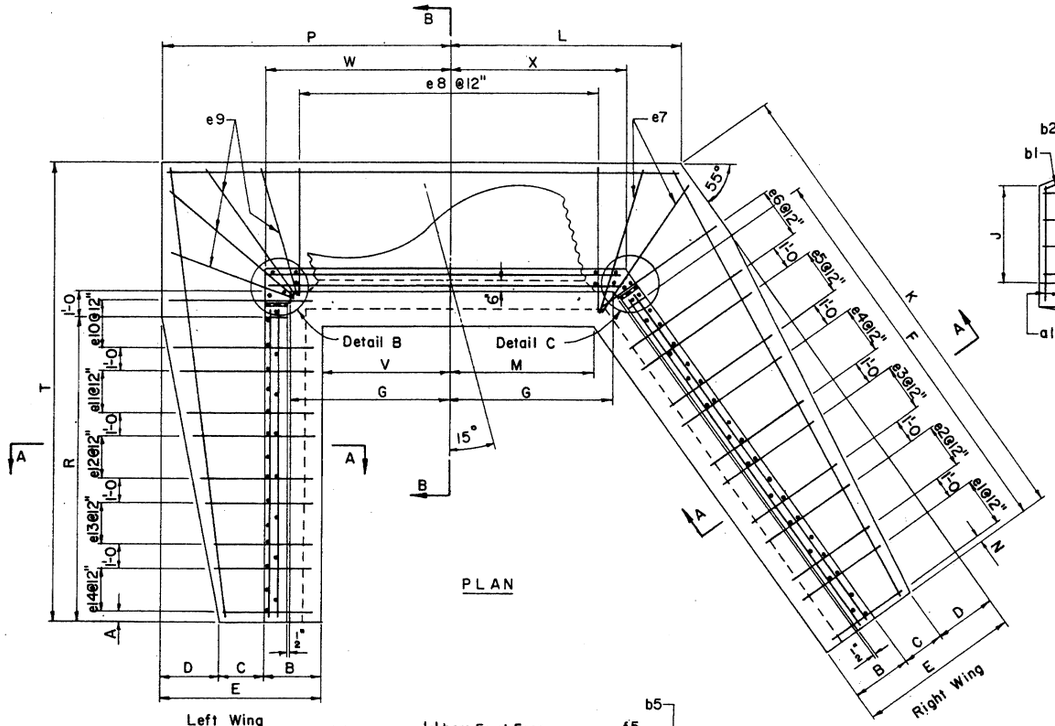


PLAN

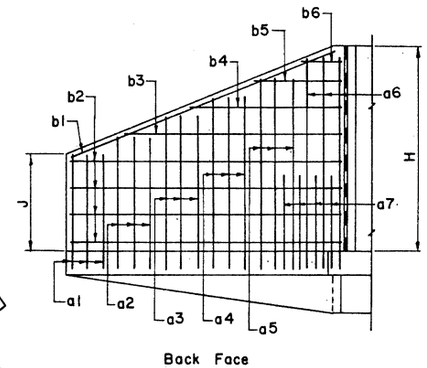


RIGHT WING ELEVATION

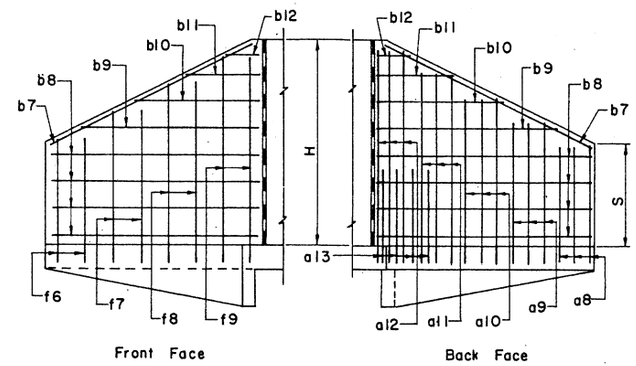


LEFT WING ELEVATION

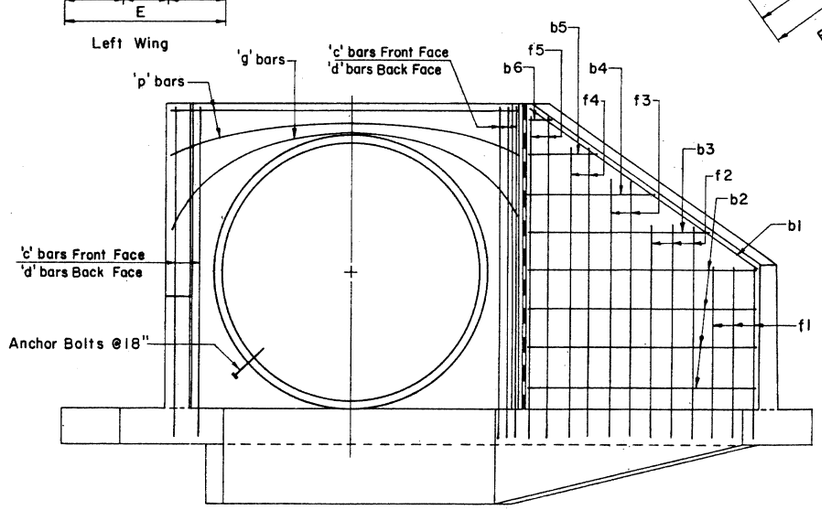


ELEVATION

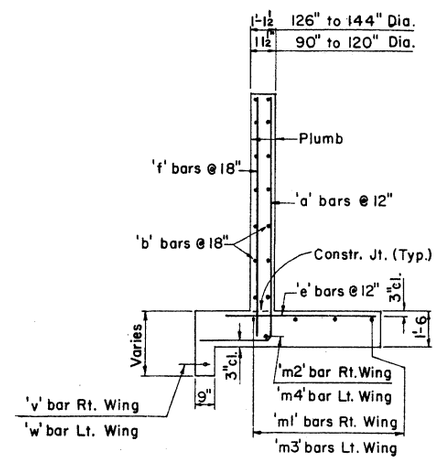


SECTION A-A

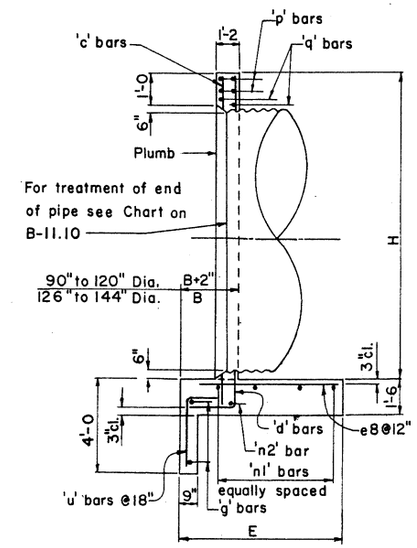


SECTION B-B

Notes: For General Notes and Misc. Details see B-11.10.
For steel list and bend diagrams see B-13.20, B-13.30 or B-13.40.

| DESIGN | K.W. | 9-72 | NO. | DESCRIPTION OF REVISIONS | MADE BY | DATE |
|---|---|---|---|---|---|---|
| DRAWN | G.H. | 9-72 | 1 | Revised ℄ of pipe. | WSK:sec | 2-11-75 |
| CHECKED | R.L.C. | 9-72 | 2 | Wall Thicknesses | G.H. | 7-14-76 |
| | | | 3 | | | |

| DESIGN APPROVED | ARIZONA DEPARTMENT OF TRANSPORTATION HIGHWAYS DIVISION STANDARD PLANS | REVISION |
|---|---|---|
| R.C. Buchler | | |
| APPROVED FOR DISTRIBUTION | INLET & OUTLET HEADWALLS 15° SKEW PIPE CULVERT | STANDARD NO. PH-7 |
| | | PLAN NO. B-13.10 |

## STEEL LIST

| Mark | Bend | 90" Dia No | 90" Size | 90" Lgth | 96" Dia No | 96" Size | 96" Lgth | 102" Dia No | 102" Size | 102" Lgth | 108" Dia No | 108" Size | 108" Lgth | 114" Dia No | 114" Size | 114" Lgth |
|---|---|---|---|---|---|---|---|---|---|---|---|---|---|---|---|---|
| a1 | A | 3 | #4 | 7-6 | 3 | #4 | 7-9 | 3 | #4 | 8-0 | 3 | #4 | 8-3 | 3 | #4 | 8-6 |
| a2 | A | 3 | #4 | 8-9 | 3 | #4 | 9-0 | 3 | #4 | 9-3 | 3 | #5 | 9-6 | 3 | #5 | 9-9 |
| a3 | A | 3 | #5 | 10-0 | 3 | #5 | 10-3 | 3 | #5 | 10-6 | 3 | #6 | 10-9 | 3 | #6 | 11-3 |
| a4 | A | 2 | #5 | 11-3 | 2 | #6 | 11-3 | 3 | #6 | 11-9 | 3 | #7 | 12-0 | 2 | #7 | 12-3 |
| a5 | A | 2 | #6 | 12-0 | 2 | #7 | 12-6 | 2 | #7 | 13-0 | 3 | #8 | 13-3 | 2 | #7 | 13-3 |
| a6 | A | | | | | | | | | | | | | 2 | #8 | 14-3 |
| a7 | A | | | | | | | | | | | | | | | |
| a8 | A | 3 | #4 | 7-9 | 3 | #4 | 8-0 | 3 | #4 | 8-3 | 3 | #4 | 8-6 | 3 | #4 | 9-0 |
| a9 | A | 3 | #5 | 9-3 | 3 | #5 | 9-6 | 3 | #5 | 9-9 | 3 | #5 | 10-0 | 3 | #5 | 10-6 |
| a10 | A | 2 | #6 | 10-9 | 3 | #6 | 11-0 | 3 | #6 | 11-3 | 3 | #6 | 11-6 | 2 | #6 | 12-0 |
| a11 | A | 2 | #6 | 11-9 | 2 | #7 | 12-3 | 2 | #7 | 12-9 | 3 | #7 | 13-0 | 2 | #7 | 13-3 |
| a12 | A | | | | | | | | | | | | | 2 | #7 | 14-3 |
| a13 | A | | | | | | | | | | | | | 3 | #4 | 6-0 |
| b1 | str | 2 | #4 | 12-6 | 2 | #4 | 13-0 | 2 | #4 | 14-0 | 2 | #4 | 14-6 | 2 | #4 | 15-0 |
| b2 | str | 6 | #4 | 12-0 | 8 | #4 | 12-6 | 8 | #4 | 13-6 | 8 | #4 | 14-0 | 8 | #4 | 14-9 |
| b3 | str | 2 | #4 | 11-6 | 2 | #4 | 9-3 | 2 | #4 | 10-6 | 2 | #4 | 11-6 | 2 | #4 | 12-9 |
| b4 | str | 2 | #4 | 8-0 | 2 | #4 | 5-6 | 2 | #4 | 6-9 | 2 | #4 | 7-9 | 2 | #4 | 9-0 |
| b5 | str | 2 | #4 | 4-3 | 2 | #4 | 2-0 | 2 | #4 | 3-0 | 2 | #4 | 4-3 | 2 | #4 | 5-3 |
| b6 | str | | | | | | | | | | | | | | | |
| b7 | str | 2 | #4 | 10-3 | 2 | #4 | 10-9 | 2 | #4 | 11-3 | 2 | #4 | 11-9 | 2 | #4 | 12-3 |
| b8 | str | 8 | #4 | 9-6 | 8 | #4 | 10-0 | 8 | #4 | 10-6 | 8 | #4 | 11-0 | 8 | #4 | 11-6 |
| b9 | str | 2 | #4 | 6-6 | 2 | #4 | 7-6 | 2 | #4 | 8-6 | 2 | #4 | 9-6 | 2 | #4 | 10-6 |
| b10 | str | 2 | #4 | 3-6 | 2 | #4 | 4-6 | 2 | #4 | 5-6 | 2 | #4 | 6-6 | 2 | #4 | 7-6 |
| b11 | str | | | | 2 | #4 | 1-6 | 2 | #4 | 2-6 | 2 | #4 | 3-6 | 2 | #4 | 4-6 |
| b12 | str | | | | | | | | | | | | | 2 | #4 | 1-6 |
| c | str | 5 | #4 | 10-6 | 5 | #4 | 11-0 | 5 | #4 | 11-6 | 5 | #4 | 12-0 | 5 | #4 | 12-6 |
| d | A | 6 | #6 | 12-3 | 6 | #6 | 12-9 | 6 | #7 | 13-3 | 6 | #7 | 13-9 | 6 | #7 | 14-6 |
| e1 | str | 3 | #4 | 2-3 | 3 | #4 | 2-3 | 3 | #4 | 2-6 | 3 | #4 | 2-9 | 3 | #4 | 2-9 |
| e2 | str | 3 | #4 | 2-9 | 3 | #4 | 2-9 | 3 | #4 | 3-0 | 3 | #4 | 3-0 | 3 | #4 | 3-3 |
| e3 | str | 3 | #4 | 3-3 | 3 | #4 | 3-3 | 3 | #5 | 3-6 | 3 | #5 | 3-6 | 3 | #5 | 3-9 |
| e4 | str | 2 | #5 | 3-6 | 3 | #5 | 3-9 | 3 | #6 | 3-9 | 3 | #6 | 4-0 | 3 | #6 | 4-3 |
| e5 | str | 2 | #5 | 3-9 | 2 | #6 | 4-0 | 2 | #6 | 4-3 | 3 | #7 | 4-6 | 2 | #7 | 4-6 |
| e6 | str | | | | | | | | | | | | | 2 | #7 | 5-0 |
| e7 | str | 2 | #5 | 4-3 | 2 | #6 | 4-6 | 2 | #6 | 4-9 | 2 | #7 | 5-3 | 2 | #7 | 5-6 |
| e8 | str | 10 | #5 | 4-3 | 11 | #6 | 4-6 | 11 | #6 | 4-9 | 12 | #7 | 5-3 | 12 | #7 | 5-6 |
| e9 | str | 4 | #5 | 4-3 | 4 | #6 | 4-6 | 4 | #6 | 4-9 | 4 | #7 | 5-3 | 4 | #7 | 5-6 |
| e10 | str | 2 | #4 | 4-3 | 2 | #5 | 4-6 | 3 | #5 | 4-9 | 3 | #5 | 4-6 | 2 | #6 | 5-3 |
| e11 | str | 3 | #4 | 3-6 | 3 | #4 | 3-9 | 3 | #4 | 4-0 | 3 | #5 | 4-0 | 2 | #5 | 4-9 |
| e12 | str | 3 | #4 | 3-0 | 3 | #4 | 3-0 | 3 | #4 | 3-3 | 3 | #4 | 3-3 | 3 | #5 | 4-0 |
| e13 | str | 3 | #4 | 2-3 | 3 | #4 | 2-3 | 3 | #4 | 2-6 | 3 | #4 | 2-9 | 3 | #4 | 3-3 |
| e14 | str | | | | | | | | | | | | | 3 | #4 | 2-6 |
| f1 | str | 3 | #4 | 5-9 | 3 | #4 | 6-0 | 3 | #4 | 6-3 | 3 | #4 | 6-6 | 3 | #4 | 6-9 |
| f2 | str | 2 | #4 | 7-9 | 2 | #4 | 8-0 | 3 | #4 | 8-0 | 3 | #4 | 8-6 | 3 | #4 | 8-6 |
| f3 | str | 2 | #4 | 9-0 | 2 | #4 | 9-3 | 2 | #4 | 10-0 | 2 | #4 | 10-3 | 3 | #4 | 10-3 |
| f4 | str | 2 | #4 | 10-0 | 2 | #4 | 10-6 | 2 | #4 | 11-3 | 2 | #4 | 11-6 | 2 | #4 | 12-3 |
| f5 | str | | | | | | | | | | | | | | | |
| f6 | str | 3 | #4 | 6-0 | 3 | #4 | 6-3 | 3 | #4 | 6-6 | 3 | #4 | 6-9 | 3 | #4 | 7-0 |
| f7 | str | 2 | #4 | 8-3 | 3 | #4 | 8-6 | 3 | #4 | 8-9 | 3 | #4 | 9-3 | 2 | #4 | 9-3 |
| f8 | str | 2 | #4 | 10-0 | 2 | #4 | 10-9 | 2 | #4 | 11-0 | 2 | #4 | 11-6 | 2 | #4 | 10-9 |
| f9 | str | | | | | | | | | | | | | 2 | #4 | 12-3 |
| m1 | str | 3 | #4 | 14-9 | 3 | #4 | 15-6 | 3 | #4 | 16-6 | 3 | #4 | 17-0 | 4 | #4 | 18-0 |
| m2 | str | 1 | #4 | 14-9 | 1 | #4 | 15-6 | 1 | #4 | 16-6 | 1 | #4 | 17-0 | 1 | #4 | 18-0 |
| m3 | str | 3 | #4 | 14-0 | 3 | #4 | 14-9 | 3 | #4 | 15-6 | 3 | #4 | 16-3 | 4 | #4 | 17-0 |
| m4 | str | 1 | #4 | 14-0 | 1 | #4 | 14-9 | 1 | #4 | 15-6 | 1 | #4 | 16-3 | 1 | #4 | 17-0 |
| n1 | str | 3 | #4 | 16-0 | 3 | #4 | 16-9 | 3 | #4 | 17-6 | 3 | #4 | 18-3 | 4 | #4 | 19-0 |
| n2 | str | 1 | #4 | 16-0 | 1 | #4 | 16-9 | 1 | #4 | 17-6 | 1 | #4 | 18-3 | 1 | #4 | 19-0 |
| p | str | 4 | #5 | 11-0 | 4 | #5 | 11-6 | 4 | #5 | 12-0 | 4 | #5 | 12-6 | 4 | #5 | 13-0 |
| q | str | 2 | #6 | 13-0 | 2 | #6 | 13-6 | 2 | #6 | 14-0 | 2 | #6 | 14-6 | 2 | #6 | 15-0 |
| g | str | 2 | #4 | 9-0 | 2 | #4 | 9-3 | 2 | #4 | 9-9 | 2 | #4 | 10-3 | 2 | #4 | 10-9 |
| u | B | 7 | #4 | 4-6 | 7 | #4 | 4-6 | 7 | #4 | 4-6 | 8 | #4 | 4-9 | 8 | #4 | 4-9 |
| v | str | 1 | #4 | 12-9 | 1 | #4 | 13-6 | 1 | #4 | 14-3 | 1 | #4 | 14-9 | 1 | #4 | 15-6 |
| w | str | 1 | #4 | 9-6 | 1 | #4 | 9-9 | 1 | #4 | 10-3 | 1 | #4 | 10-9 | 1 | #4 | 11-3 |

| Mark | Bend | 120" Dia No | 120" Size | 120" Lgth | 126" Dia No | 126" Size | 126" Lgth | 132" Dia No | 132" Size | 132" Lgth | 138" Dia No | 138" Size | 138" Lgth | 144" Dia No | 144" Size | 144" Lgth |
|---|---|---|---|---|---|---|---|---|---|---|---|---|---|---|---|---|
| a1 | A | 3 | #4 | 9-0 | 3 | #4 | 9-3 | 3 | #4 | 9-6 | 3 | #5 | 9-9 | 4 | #5 | 10-0 |
| a2 | A | 3 | #5 | 10-3 | 3 | #5 | 10-6 | 3 | #5 | 10-9 | 3 | #6 | 11-0 | 3 | #6 | 11-9 |
| a3 | A | 3 | #6 | 11-6 | 3 | #6 | 11-9 | 3 | #6 | 12-0 | 3 | #7 | 12-3 | 3 | #7 | 13-0 |
| a4 | A | 3 | #7 | 12-9 | 3 | #7 | 12-9 | 3 | #7 | 13-0 | 3 | #8 | 13-6 | 3 | #8 | 14-3 |
| a5 | A | 2 | #8 | 13-9 | 3 | #8 | 14-0 | 3 | #8 | 14-3 | 3 | #8 | 14-9 | 3 | #8 | 15-6 |
| a6 | A | 2 | #8 | 14-9 | 2 | #8 | 15-3 | 2 | #8 | 15-6 | 3 | #8 | 16-0 | 3 | #8 | 16-9 |
| a7 | A | | | | 2 | #4 | 6-0 | 3 | #4 | 7-0 | 5 | #4 | 7-0 | 3 | #4 | 7-0 |
| a8 | A | 3 | #4 | 9-3 | 3 | #4 | 9-6 | 3 | #5 | 9-9 | 3 | #5 | 10-0 | 5 | #5 | 10-3 |
| a9 | A | 3 | #6 | 10-9 | 3 | #6 | 11-0 | 3 | #6 | 11-3 | 3 | #6 | 11-6 | 3 | #6 | 11-9 |
| a10 | A | 3 | #7 | 12-3 | 3 | #7 | 12-6 | 3 | #7 | 12-9 | 3 | #7 | 13-0 | 3 | #8 | 13-3 |
| a11 | A | 2 | #7 | 13-6 | 2 | #7 | 13-9 | 3 | #8 | 14-3 | 3 | #8 | 14-9 | 3 | #8 | 15-0 |
| a12 | A | 2 | #7 | 14-9 | 2 | #7 | 15-3 | 2 | #8 | 15-6 | 2 | #8 | 16-0 | 3 | #8 | 16-6 |
| a13 | A | 4 | #4 | 6-0 | 4 | #4 | 6-0 | 4 | #4 | 7-0 | 4 | #4 | 7-0 | 8 | #4 | 7-0 |
| b1 | str | 2 | #4 | 16-0 | 2 | #4 | 16-9 | 2 | #4 | 17-3 | 2 | #4 | 18-0 | 2 | #4 | 18-9 |
| b2 | str | 8 | #4 | 15-3 | 8 | #4 | 16-0 | 8 | #4 | 16-9 | 10 | #4 | 17-6 | 10 | #4 | 18-0 |
| b3 | str | 2 | #4 | 14-0 | 2 | #4 | 15-6 | 2 | #4 | 16-6 | 2 | #4 | 14-0 | 2 | #4 | 15-3 |
| b4 | str | 2 | #4 | 10-3 | 2 | #4 | 11-6 | 2 | #4 | 12-6 | 2 | #4 | 10-6 | 2 | #4 | 11-6 |
| b5 | str | 2 | #4 | 6-6 | 2 | #4 | 7-9 | 2 | #4 | 9-0 | 2 | #4 | 6-9 | 2 | #4 | 7-9 |
| b6 | str | 2 | #4 | 3-0 | 2 | #4 | 4-3 | 2 | #4 | 5-3 | 2 | #4 | 3-0 | 2 | #4 | 4-3 |
| b7 | str | 2 | #4 | 12-9 | 2 | #4 | 13-3 | 2 | #4 | 14-0 | 2 | #4 | 14-6 | 2 | #4 | 15-0 |
| b8 | str | 8 | #4 | 12-0 | 10 | #4 | 12-6 | 10 | #4 | 13-0 | 10 | #4 | 13-6 | 10 | #4 | 14-0 |
| b9 | str | 2 | #4 | 11-6 | 2 | #4 | 9-6 | 2 | #4 | 10-6 | 2 | #4 | 11-3 | 2 | #4 | 12-3 |
| b10 | str | 2 | #4 | 8-6 | 2 | #4 | 6-6 | 2 | #4 | 7-6 | 2 | #4 | 8-3 | 2 | #4 | 9-3 |
| b11 | str | 2 | #4 | 5-6 | 2 | #4 | 3-3 | 2 | #4 | 4-6 | 2 | #4 | 5-3 | 2 | #4 | 6-6 |
| b12 | str | 2 | #4 | 2-3 | | | | 2 | #4 | 1-3 | 2 | #4 | 2-3 | 2 | #4 | 3-6 |
| c | str | 5 | #4 | 13-0 | 5 | #4 | 13-6 | 5 | #4 | 14-0 | 5 | #4 | 14-6 | 5 | #4 | 15-0 |
| d | A | 6 | #7 | 15-0 | 6 | #7 | 15-6 | 6 | #7 | 16-0 | 6 | #7 | 16-6 | 6 | #7 | 17-0 |
| e1 | str | 3 | #4 | 2-9 | 3 | #4 | 2-9 | 3 | #4 | 2-9 | 3 | #4 | 3-0 | 4 | #4 | 3-0 |
| e2 | str | 3 | #4 | 3-3 | 3 | #4 | 3-3 | 3 | #5 | 3-6 | 3 | #5 | 3-6 | 3 | #5 | 3-9 |
| e3 | str | 3 | #5 | 3-9 | 3 | #5 | 4-0 | 3 | #5 | 4-0 | 3 | #6 | 4-0 | 3 | #6 | 4-3 |
| e4 | str | 3 | #6 | 4-3 | 3 | #6 | 4-6 | 3 | #6 | 4-6 | 3 | #7 | 4-6 | 3 | #7 | 4-9 |
| e5 | str | 2 | #7 | 4-9 | 3 | #7 | 5-0 | 3 | #7 | 5-0 | 3 | #7 | 5-0 | 3 | #8 | 5-3 |
| e6 | str | 2 | #7 | 5-3 | 2 | #8 | 5-6 | 3 | #8 | 5-6 | 3 | #8 | 5-9 | 3 | #8 | 5-9 |
| e7 | str | 2 | #7 | 5-9 | 2 | #8 | 6-0 | 2 | #8 | 6-3 | 2 | #8 | 6-6 | 2 | #8 | 6-6 |
| e8 | str | 13 | #7 | 5-9 | 13 | #8 | 6-0 | 14 | #8 | 6-3 | 14 | #8 | 6-6 | 15 | #8 | 6-6 |
| e9 | str | 4 | #7 | 5-9 | 4 | #8 | 6-0 | 4 | #8 | 6-3 | 4 | #8 | 6-6 | 4 | #8 | 6-6 |
| e10 | str | 2 | #6 | 5-6 | 2 | #7 | 5-9 | 2 | #7 | 6-0 | 3 | #7 | 6-3 | 3 | #8 | 6-6 |
| e11 | str | 2 | #6 | 5-0 | 3 | #6 | 5-0 | 3 | #6 | 5-3 | 3 | #7 | 5-6 | 3 | #7 | 5-9 |
| e12 | str | 3 | #5 | 4-3 | 3 | #5 | 4-3 | 3 | #5 | 4-6 | 3 | #5 | 4-6 | 3 | #6 | 4-9 |
| e13 | str | 3 | #4 | 3-6 | 3 | #4 | 3-6 | 3 | #4 | 3-9 | 3 | #4 | 3-9 | 3 | #5 | 4-0 |
| e14 | str | 3 | #4 | 2-9 | 3 | #4 | 2-9 | 3 | #4 | 3-0 | 3 | #4 | 3-0 | 3 | #4 | 3-6 |
| f1 | str | 3 | #4 | 7-0 | 3 | #4 | 7-0 | 3 | #4 | 7-3 | 3 | #4 | 7-6 | 4 | #4 | 7-9 |
| f2 | str | 3 | #4 | 9-0 | 3 | #4 | 9-0 | 3 | #4 | 9-3 | 3 | #4 | 9-9 | 3 | #4 | 10-3 |
| f3 | str | 3 | #4 | 10-9 | 3 | #4 | 10-9 | 3 | #4 | 11-3 | 3 | #4 | 11-6 | 3 | #4 | 12-3 |
| f4 | str | 2 | #4 | 12-6 | 3 | #4 | 12-6 | 3 | #4 | 13-0 | 3 | #4 | 13-3 | 3 | #4 | 14-0 |
| f5 | str | | | | | | | | | | | | | | | |
| f6 | str | 3 | #4 | 7-3 | 3 | #4 | 7-6 | 3 | #4 | 7-9 | 3 | #4 | 8-0 | 3 | #4 | 8-3 |
| f7 | str | 2 | #4 | 9-6 | 2 | #4 | 10-0 | 3 | #4 | 10-0 | 3 | #4 | 10-3 | 3 | #4 | 10-9 |
| f8 | str | 2 | #4 | 11-0 | 2 | #4 | 11-6 | 2 | #4 | 12-3 | 2 | #4 | 12-6 | 2 | #4 | 13-0 |
| f9 | str | 2 | #4 | 12-6 | 2 | #4 | 13-0 | 2 | #4 | 13-9 | 2 | #4 | 14-0 | 2 | #4 | 14-6 |
| m1 | str | 4 | #4 | 18-9 | 4 | #4 | 19-6 | 4 | #4 | 20-3 | 4 | #4 | 21-0 | 4 | #4 | 21-9 |
| m2 | str | 1 | #4 | 18-9 | 1 | #4 | 19-6 | 1 | #4 | 20-3 | 1 | #4 | 21-0 | 1 | #4 | 21-9 |
| m3 | str | 4 | #4 | 17-6 | 4 | #4 | 18-3 | 4 | #4 | 19-0 | 4 | #4 | 19-9 | 4 | #4 | 20-6 |
| m4 | str | 1 | #4 | 17-6 | 1 | #4 | 18-3 | 1 | #4 | 19-0 | 1 | #4 | 19-9 | 1 | #4 | 20-6 |
| n1 | str | 4 | #4 | 19-9 | 4 | #4 | 20-6 | 4 | #4 | 21-3 | 4 | #4 | 22-3 | 4 | #4 | 23-3 |
| n2 | str | 1 | #4 | 19-9 | 1 | #4 | 20-6 | 1 | #4 | 21-3 | 1 | #4 | 22-3 | 1 | #4 | 23-3 |
| p | str | 4 | #5 | 13-6 | 4 | #5 | 14-0 | 4 | #5 | 14-6 | 4 | #5 | 15-0 | 4 | #5 | 15-6 |
| q | str | 2 | #6 | 15-6 | 2 | #6 | 16-0 | 2 | #6 | 16-6 | 2 | #6 | 17-0 | 2 | #6 | 17-6 |
| g | str | 2 | #4 | 11-0 | 2 | #4 | 11-6 | 2 | #4 | 12-0 | 2 | #4 | 12-6 | 2 | #4 | 13-0 |
| u | B | 8 | #4 | 4-9 | 8 | #4 | 4-9 | 9 | #4 | 5-0 | 9 | #4 | 5-0 | 9 | #4 | 5-0 |
| v | str | 1 | #4 | 16-0 | 1 | #4 | 16-9 | 1 | #4 | 17-3 | 1 | #4 | 18-0 | 1 | #4 | 18-6 |
| w | str | 1 | #4 | 11-9 | 1 | #4 | 12-3 | 1 | #4 | 12-9 | 1 | #4 | 13-3 | 1 | #4 | 13-6 |

## DIMENSIONS

| Pipe Dia | A | B | C | D | E | F | G | H | J | K | L | M | N | P | R | S | T | V | W | X |
|---|---|---|---|---|---|---|---|---|---|---|---|---|---|---|---|---|---|---|---|---|
| 90" | 0-6 | 2-1 | 1-2 | 1-10 | 5-1 | 12-0 | 5-1 | 9-6 | 4-7 | 15-1 | 7-2 | 4-6 1/4 | 0-3 | 9-1 | 9-6 | 4-9 | 14-6 | 4-0 | 6-1 | 5-5 7/8 |
| 96" | 0-3 | 2-2 | 1-3 | 1-11 | 5-4 | 12-8 | 5-4 | 10-0 | 4-10 | 15-10 | 7-6 | 4-8 3/4 | 0-7 | 9-6 | 10-0 | 5-0 | 15-2 | 4-2 | 6-4 | 5-8 7/8 |
| 102" | 0-6 | 2-2 | 1-4 | 2-1 | 5-7 | 13-4 | 5-7 | 10-6 | 5-1 | 16-7 5/8 | 7-10 5/8 | 4-11 3/4 | 0-5 | 10-0 | 10-6 | 5-3 | 15-11 | 4-5 | 6-7 | 5-11 7/8 |
| 108" | 0-3 | 2-3 | 1-5 | 2-2 | 5-10 | 14-0 | 5-10 | 11-0 | 5-3 | 17-4 5/8 | 8-2 5/8 | 5-2 | 0-3 | 10-5 | 11-0 | 5-6 | 16-7 | 4-7 | 6-10 | 6-2 7/8 |
| 114" | 0-6 | 2-3 | 1-7 | 2-3 | 6-1 | 14-8 | 6-1 | 11-6 | 5-6 | 18-2 1/4 | 8-7 1/4 | 5-5 1/4 | 0-7 | 10-11 | 11-6 | 5-9 | 17-4 | 4-10 | 7-1 | 6-5 7/8 |
| 120" | 0-3 | 2-4 | 1-8 | 2-4 | 6-4 | 15-4 | 6-4 | 12-0 | 5-9 | 18-11 1/4 | 8-11 1/4 | 5-7 5/8 | 0-5 | 11-4 | 12-0 | 6-0 | 18-0 | 5-0 | 7-4 | 6-8 7/8 |
| 126" | 0-6 | 2-6 | 1-7 | 2-6 | 6-7 | 16-0 | 6-7 | 12-6 | 6-0 | 19-8 3/4 | 9-3 7/8 | 5-10 5/8 | 0-3 | 11-10 | 12-6 | 6-3 | 18-9 | 5-3 | 7-9 | 7-2 1/4 |
| 132" | 0-3 | 2-7 | 1-8 | 2-7 | 6-10 | 16-8 | 6-10 | 13-0 | 6-2 | 20-5 7/8 | 9-7 7/8 | 6-1 1/8 | 0-7 | 12-3 | 13-0 | 6-6 | 19-5 | 5-5 | 8-0 | 7-5 1/4 |
| 138" | 0-6 | 2-7 | 1-10 | 2-8 | 7-1 | 17-4 | 7-1 | 13-6 | 6-5 | 21-3 3/8 | 10-0 3/8 | 6-4 1/8 | 0-5 | 12-9 | 13-6 | 6-9 | 20-2 | 5-8 | 8-3 | 7-8 1/4 |
| 144" | 0-3 | 2-8 | 1-11 | 2-9 | 7-4 | 18-0 | 7-5 | 14-0 | 6-8 | 22-0 1/2 | 10-5 1/2 | 6-7 5/8 | 0-3 | 13-3 | 14-0 | 7-0 | 20-10 | 5-11 | 8-7 | 8-0 1/4 |

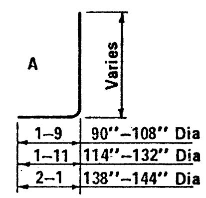


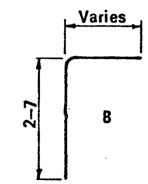


**BENDS**

## QUANTITIES

| Pipe Dia. | Reinf. (lbs) | Conc. (CY) |
|---|---|---|
| 90" | 1025 | 20.02 |
| 96" | 1180 | 21.86 |
| 102" | 1330 | 23.83 |
| 108" | 1595 | 25.79 |
| 114" | 1760 | 27.99 |
| 120" | 1955 | 30.15 |
| 126" | 2180 | 34.27 |
| 132" | 2395 | 36.72 |
| 138" | 2645 | 39.37 |
| 144" | 2920 | 42.20 |

NOTE:

Quantities and steel list shown are for one headwall.

DESIGN APPROVED
APPROVED FOR DISTRIBUTION

ARIZONA
DEPARTMENT OF TRANSPORTATION
HIGHWAYS DIVISION
STANDARD PLANS

INLET AND OUTLET HEADWALLS
15° SKEW PIPE CULVERT
2:1 SLOPE

REVISION

STANDARD NO. PH-8
PLAN NO. B-13.20

DESIGN KW 9-72 | DRAWN LAM 9-72 | CHECKED RLC 9-72

## STEEL LIST

| Mark | Bend | 90" Dia | | | 96" Dia | | | 102" Dia | | | 108" Dia | | | 114" Dia | | |
|---|---|---|---|---|---|---|---|---|---|---|---|---|---|---|---|---|
| | | No | Size | Lgth | No | Size | Lgth | No | Size | Lgth | No | Size | Lgth | No | Size | Lgth |
| a1 | A | 4 | #5 | 9-9 | 3 | #5 | 10-3 | 4 | #5 | 10-6 | 4 | #5 | 10-9 | 4 | #6 | 11-3 |
| a2 | A | 4 | #5 | 10-9 | 3 | #5 | 10-9 | 3 | #6 | 11-3 | 4 | #6 | 11-6 | 4 | #6 | 12-0 |
| a3 | A | 3 | #6 | 11-6 | 3 | #6 | 11-3 | 3 | #6 | 12-0 | 3 | #6 | 12-3 | 3 | #7 | 12-9 |
| a4 | A | 3 | #6 | 12-3 | 3 | #6 | 12-0 | 3 | #7 | 12-6 | 3 | #7 | 13-0 | 3 | #7 | 13-6 |
| a5 | A | | | | 3 | #7 | 12-6 | 3 | #7 | 13-0 | 2 | #7 | 13-6 | 3 | #8 | 14-0 |
| a6 | A | | | | | | | | | | | | | | | |
| a7 | A | | | | | | | | | | | | | | | |
| a8 | A | 3 | #4 | 9-0 | 3 | #4 | 9-6 | 4 | #5 | 9-9 | 4 | #5 | 10-3 | 4 | #6 | 10-9 |
| a9 | A | 3 | #4 | 9-9 | 3 | #5 | 10-3 | 3 | #5 | 10-9 | 4 | #6 | 11-3 | 4 | #6 | 11-9 |
| a10 | A | 3 | #5 | 10-6 | 3 | #6 | 11-0 | 3 | #6 | 11-6 | 3 | #7 | 12-0 | 3 | #7 | 12-6 |
| a11 | A | 3 | #6 | 11-3 | 3 | #6 | 11-9 | 3 | #7 | 12-3 | 3 | #7 | 12-9 | 3 | #7 | 13-6 |
| a12 | A | 2 | #6 | 12-0 | 3 | #7 | 12-3 | 3 | #7 | 12-9 | 2 | #7 | 13-3 | 3 | #8 | 14-0 |
| a13 | A | | | | | | | | | | | | | | | |
| b1 | str | 2 | #4 | 13-6 | 2 | #4 | 14-3 | 2 | #4 | 15-0 | 2 | #4 | 15-9 | 2 | #4 | 16-6 |
| b2 | str | 10 | #4 | 13-3 | 10 | #4 | 14-0 | 10 | #4 | 14-9 | 12 | #4 | 15-6 | 12 | #4 | 16-3 |
| b3 | str | 2 | #4 | 8-0 | 2 | #4 | 10-9 | 2 | #4 | 13-0 | 2 | #4 | 8-0 | 2 | #4 | 10-6 |
| b4 | str | | | | 2 | #4 | 3-0 | 2 | #4 | 5-9 | | | | 2 | #4 | 3-3 |
| b5 | str | | | | | | | | | | | | | | | |
| b6 | str | | | | | | | | | | | | | | | |
| b7 | str | 2 | #4 | 13-6 | 2 | #4 | 14-0 | 2 | #4 | 14-9 | 2 | #4 | 15-6 | 2 | #4 | 16-0 |
| b8 | str | 8 | #4 | 13-6 | 10 | #4 | 14-0 | 10 | #4 | 14-9 | 10 | #4 | 15-6 | 10 | #4 | 16-0 |
| b9 | str | 2 | #4 | 12-9 | 2 | #4 | 8-9 | 2 | #4 | 10-9 | 2 | #4 | 12-9 | 2 | #4 | 14-6 |
| b10 | str | 2 | #4 | 6-9 | 2 | #4 | 2-9 | 2 | #4 | 4-9 | 2 | #4 | 6-9 | 2 | #4 | 8-6 |
| b11 | str | | | | | | | | | | | | | 2 | #4 | 2-9 |
| b12 | str | | | | | | | | | | | | | | | |
| c | str | 5 | #4 | 10-6 | 5 | #4 | 11-0 | 5 | #4 | 11-6 | 5 | #4 | 12-0 | 5 | #4 | 12-6 |
| d | A | 6 | #6 | 12-3 | 6 | #6 | 12-9 | 6 | #7 | 13-3 | 6 | #7 | 13-9 | 6 | #7 | 14-6 |
| e1 | str | 4 | #4 | 3-0 | 3 | #4 | 3-0 | 4 | #4 | 3-3 | 4 | #4 | 3-6 | 4 | #4 | 3-9 |
| e2 | str | 4 | #4 | 3-6 | 3 | #4 | 3-6 | 3 | #4 | 3-6 | 4 | #4 | 3-9 | 4 | #4 | 4-0 |
| e3 | str | 3 | #4 | 3-9 | 3 | #4 | 3-9 | 3 | #4 | 4-0 | 3 | #4 | 4-0 | 3 | #5 | 4-3 |
| e4 | str | 3 | #4 | 4-0 | 3 | #4 | 4-0 | 3 | #4 | 4-3 | 3 | #5 | 4-6 | 3 | #5 | 4-6 |
| e5 | str | | | | 3 | #5 | 4-3 | 3 | #5 | 4-6 | 3 | #5 | 4-9 | 3 | #6 | 4-9 |
| e6 | str | | | | | | | | | | | | | | | |
| e7 | str | 2 | #4 | 4-3 | 2 | #5 | 4-6 | 2 | #5 | 4-9 | 2 | #5 | 5-0 | 2 | #6 | 5-0 |
| e8 | str | 10 | #4 | 4-3 | 11 | #5 | 4-6 | 11 | #5 | 4-9 | 12 | #5 | 5-0 | 12 | #6 | 5-0 |
| e9 | str | 4 | #4 | 4-3 | 4 | #5 | 4-6 | 4 | #5 | 4-9 | 4 | #5 | 5-0 | 4 | #6 | 5-0 |
| e10 | str | 3 | #4 | 4-0 | 3 | #5 | 4-3 | 4 | #5 | 4-6 | 3 | #5 | 4-9 | 3 | #6 | 4-9 |
| e11 | str | 3 | #4 | 3-9 | 3 | #4 | 4-0 | 4 | #4 | 4-0 | 3 | #5 | 4-6 | 3 | #5 | 4-6 |
| e12 | str | 3 | #4 | 3-6 | 3 | #4 | 3-9 | 4 | #4 | 3-9 | 3 | #4 | 4-0 | 3 | #4 | 4-3 |
| e13 | str | 3 | #4 | 3-3 | 3 | #4 | 3-6 | 4 | #4 | 3-3 | 4 | #4 | 3-9 | 4 | #4 | 4-0 |
| e14 | str | 3 | #4 | 3-0 | 3 | #4 | 3-0 | | | | 4 | #4 | 3-6 | 4 | #4 | 3-9 |
| f1 | str | 4 | #4 | 7-9 | 4 | #4 | 8-6 | 4 | #4 | 8-9 | 4 | #4 | 9-0 | 3 | #4 | 9-3 |
| f2 | str | 3 | #4 | 9-3 | 3 | #4 | 9-9 | 4 | #4 | 10-0 | 4 | #4 | 10-3 | 3 | #4 | 10-3 |
| f3 | str | 3 | #4 | 10-0 | 3 | #4 | 10-6 | 3 | #4 | 11-0 | 3 | #4 | 11-6 | 3 | #4 | 11-3 |
| f4 | str | | | | | | | | | | | | | 3 | #4 | 12-0 |
| f5 | str | | | | | | | | | | | | | | | |
| f6 | str | 4 | #4 | 7-3 | 4 | #4 | 7-9 | 4 | #4 | 8-0 | 4 | #4 | 8-6 | 3 | #4 | 8-9 |
| f7 | str | 3 | #4 | 8-9 | 3 | #4 | 9-3 | 4 | #4 | 9-6 | 4 | #4 | 10-0 | 3 | #4 | 9-9 |
| f8 | str | 3 | #4 | 10-0 | 3 | #4 | 10-6 | 3 | #4 | 11-0 | 3 | #4 | 11-6 | 3 | #4 | 10-9 |
| f9 | str | | | | | | | | | | | | | 3 | #4 | 12-0 |
| m1 | str | 3 | #4 | 16-0 | 3 | #4 | 16-9 | 3 | #4 | 17-9 | 3 | #4 | 18-6 | 3 | #4 | 19-3 |
| m2 | str | 1 | #4 | 16-0 | 1 | #4 | 16-9 | 1 | #4 | 17-9 | 1 | #4 | 18-6 | 1 | #4 | 19-3 |
| m3 | str | 3 | #4 | 18-3 | 3 | #4 | 18-9 | 3 | #4 | 19-9 | 3 | #4 | 20-9 | 3 | #4 | 21-6 |
| m4 | str | 1 | #4 | 18-3 | 1 | #4 | 18-9 | 1 | #4 | 19-9 | 1 | #4 | 20-9 | 1 | #4 | 21-6 |
| n1 | str | 3 | #4 | 14-9 | 3 | #4 | 15-6 | 3 | #4 | 16-3 | 3 | #4 | 17-0 | 3 | #4 | 17-6 |
| n2 | str | 1 | #4 | 14-9 | 1 | #4 | 15-6 | 1 | #4 | 16-3 | 1 | #4 | 17-0 | 1 | #4 | 17-6 |
| p | str | 4 | #5 | 11-0 | 4 | #5 | 11-6 | 4 | #5 | 12-0 | 4 | #5 | 12-6 | 4 | #5 | 13-0 |
| q | str | 2 | #6 | 13-0 | 2 | #6 | 13-6 | 2 | #6 | 15-0 | 2 | #6 | 15-6 | 2 | #6 | 15-0 |
| g | str | 2 | #4 | 9-3 | 2 | #4 | 9-9 | 2 | #4 | 10-0 | 2 | #4 | 10-6 | 2 | #4 | 11-0 |
| u | B | 7 | #4 | 4-6 | 7 | #4 | 4-6 | 7 | #4 | 4-6 | 8 | #4 | 4-9 | 8 | #4 | 4-9 |
| v | str | 1 | #4 | 14-0 | 1 | #4 | 14-9 | 1 | #4 | 15-6 | 1 | #4 | 16-3 | 1 | #4 | 17-0 |
| w | str | 1 | #4 | 13-6 | 1 | #4 | 14-0 | 1 | #4 | 14-6 | 1 | #4 | 15-3 | 1 | #4 | 15-9 |

| Mark | Bend | 120" Dia | | | 126" Dia | | | 132" Dia | | | 138" Dia | | | 144" Dia | | |
|---|---|---|---|---|---|---|---|---|---|---|---|---|---|---|---|---|
| | | No | Size | Lgth | No | Size | Lgth | No | Size | Lgth | No | Size | Lgth | No | Size | Lgth |
| a1 | A | 4 | #6 | 11-9 | 4 | #6 | 12-0 | 4 | #6 | 12-6 | 4 | #7 | 12-9 | 5 | #7 | 13-3 |
| a2 | A | 4 | #7 | 12-6 | 4 | #7 | 12-9 | 4 | #7 | 13-3 | 4 | #8 | 13-9 | 4 | #8 | 14-3 |
| a3 | A | 4 | #7 | 13-3 | 4 | #8 | 13-6 | 4 | #8 | 14-0 | 4 | #8 | 14-6 | 4 | #8 | 15-0 |
| a4 | A | 3 | #8 | 14-0 | 4 | #8 | 14-6 | 4 | #8 | 14-9 | 4 | #8 | 15-3 | 4 | #8 | 15-9 |
| a5 | A | 3 | #8 | 14-6 | 3 | #8 | 15-0 | 3 | #8 | 15-6 | 4 | #8 | 16-0 | 4 | #8 | 16-6 |
| a6 | A | | | | | | | | | | | | | | | |
| a7 | A | | | | 3 | #4 | 7-3 | 6 | #4 | 7-9 | 8 | #4 | 8-3 | 11 | #4 | 8-6 |
| a8 | A | 4 | #6 | 11-0 | 4 | #6 | 11-3 | 4 | #6 | 11-9 | 4 | #6 | 12-0 | 4 | #7 | 12-6 |
| a9 | A | 4 | #6 | 12-0 | 4 | #7 | 12-3 | 4 | #7 | 12-6 | 4 | #7 | 13-0 | 4 | #7 | 13-6 |
| a10 | A | 4 | #7 | 13-0 | 4 | #8 | 13-3 | 4 | #8 | 13-6 | 4 | #8 | 14-0 | 4 | #8 | 14-6 |
| a11 | A | 3 | #8 | 14-0 | 3 | #8 | 14-3 | 4 | #8 | 14-6 | 4 | #8 | 15-0 | 4 | #8 | 15-6 |
| a12 | A | 2 | #8 | 14-6 | 3 | #8 | 15-0 | 3 | #8 | 15-6 | 3 | #8 | 16-0 | 4 | #8 | 16-6 |
| a13 | A | | | | 2 | #4 | 7-0 | 6 | #4 | 7-0 | 6 | #4 | 7-3 | 7 | #4 | 7-9 |
| b1 | str | 2 | #4 | 17-3 | 2 | #4 | 18-0 | 2 | #4 | 18-9 | 2 | #4 | 19-6 | 2 | #4 | 20-3 |
| b2 | str | 12 | #4 | 17-0 | 12 | #4 | 17-9 | 14 | #4 | 18-6 | 14 | #4 | 19-3 | 14 | #4 | 20-0 |
| b3 | str | 2 | #4 | 12-9 | 2 | #4 | 15-3 | 2 | #4 | 10-9 | 2 | #4 | 12-9 | 2 | #4 | 15-3 |
| b4 | str | 2 | #4 | 5-6 | 2 | #4 | 8-0 | 2 | #4 | 3-3 | 2 | #4 | 5-6 | 2 | #4 | 7-9 |
| b5 | str | | | | | | | | | | | | | | | |
| b6 | str | | | | | | | | | | | | | | | |
| b7 | str | 2 | #4 | 16-6 | 2 | #4 | 17-3 | 2 | #4 | 18-0 | 2 | #4 | 18-6 | 2 | #4 | 19-0 |
| b8 | str | 12 | #4 | 16-6 | 12 | #4 | 17-3 | 12 | #4 | 18-0 | 12 | #4 | 18-6 | 12 | #4 | 19-0 |
| b9 | str | 2 | #4 | 10-9 | 2 | #4 | 12-6 | 2 | #4 | 14-6 | 2 | #4 | 16-6 | 2 | #4 | 18-6 |
| b10 | str | 2 | #4 | 4-9 | 2 | #4 | 6-6 | 2 | #4 | 8-9 | 2 | #4 | 10-9 | 2 | #4 | 12-6 |
| b11 | str | | | | | | | 2 | #4 | 2-6 | 2 | #4 | 4-6 | 2 | #4 | 6-6 |
| b12 | str | | | | | | | | | | | | | | | |
| c | str | 5 | #4 | 13-0 | 5 | #4 | 13-6 | 5 | #4 | 14-0 | 5 | #4 | 14-6 | 5 | #4 | 15-0 |
| d | A | 6 | #7 | 15-0 | 6 | #7 | 15-6 | 6 | #7 | 16-0 | 6 | #7 | 16-6 | 6 | #7 | 17-0 |
| e1 | str | 4 | #4 | 4-0 | 4 | #4 | 4-0 | 4 | #4 | 4-3 | 4 | #4 | 4-6 | 5 | #5 | 4-6 |
| e2 | str | 4 | #4 | 4-3 | 4 | #5 | 4-3 | 4 | #5 | 4-6 | 4 | #5 | 4-9 | 4 | #6 | 5-0 |
| e3 | str | 4 | #5 | 4-6 | 4 | #5 | 4-9 | 4 | #6 | 4-9 | 4 | #6 | 5-0 | 4 | #6 | 5-3 |
| e4 | str | 3 | #6 | 4-9 | 4 | #6 | 5-0 | 4 | #6 | 5-3 | 4 | #7 | 5-6 | 4 | #7 | 5-9 |
| e5 | str | 3 | #6 | 5-0 | 3 | #7 | 5-3 | 4 | #7 | 5-6 | 4 | #7 | 5-9 | 4 | #8 | 6-0 |
| e6 | str | | | | | | | | | | | | | | | |
| e7 | str | 2 | #6 | 5-3 | 2 | #7 | 5-6 | 2 | #7 | 5-9 | 2 | #7 | 6-0 | 2 | #8 | 6-3 |
| e8 | str | 13 | #6 | 5-3 | 13 | #7 | 5-6 | 14 | #7 | 5-9 | 14 | #7 | 6-0 | 15 | #8 | 6-3 |
| e9 | str | 4 | #6 | 5-3 | 4 | #7 | 5-6 | 4 | #7 | 5-9 | 4 | #7 | 6-0 | 4 | #8 | 6-3 |
| e10 | str | 3 | #6 | 5-0 | 3 | #7 | 5-3 | 3 | #7 | 5-6 | 4 | #7 | 5-9 | 4 | #8 | 6-0 |
| e11 | str | 3 | #6 | 4-9 | 3 | #6 | 5-0 | 4 | #6 | 5-3 | 4 | #7 | 5-6 | 4 | #7 | 5-9 |
| e12 | str | 4 | #5 | 4-6 | 4 | #5 | 4-9 | 4 | #6 | 4-9 | 4 | #6 | 5-0 | 4 | #6 | 5-3 |
| e13 | str | 4 | #4 | 4-3 | 4 | #4 | 4-3 | 4 | #5 | 4-6 | 4 | #5 | 4-9 | 4 | #5 | 5-0 |
| e14 | str | 4 | #4 | 4-0 | 4 | #4 | 4-0 | 4 | #4 | 4-3 | 4 | #4 | 4-6 | 4 | #4 | 4-6 |
| f1 | str | 3 | #4 | 9-9 | 4 | #4 | 10-0 | 4 | #4 | 10-6 | 4 | #4 | 10-9 | 4 | #4 | 11-0 |
| f2 | str | 3 | #4 | 10-9 | 3 | #4 | 11-3 | 3 | #4 | 11-9 | 4 | #4 | 12-0 | 4 | #4 | 12-3 |
| f3 | str | 3 | #4 | 11-6 | 3 | #4 | 12-3 | 3 | #4 | 12-9 | 3 | #4 | 13-3 | 3 | #4 | 13-6 |
| f4 | str | 3 | #4 | 12-6 | 3 | #4 | 13-0 | 3 | #4 | 13-6 | 3 | #4 | 14-0 | 3 | #4 | 14-6 |
| f5 | str | | | | | | | | | | | | | | | |
| f6 | str | 3 | #4 | 9-0 | 3 | #4 | 9-6 | 4 | #4 | 9-9 | 4 | #4 | 10-0 | 4 | #4 | 10-6 |
| f7 | str | 3 | #4 | 10-3 | 3 | #4 | 10-6 | 3 | #4 | 11-3 | 3 | #4 | 11-6 | 4 | #4 | 12-0 |
| f8 | str | 3 | #4 | 11-3 | 3 | #4 | 11-9 | 3 | #4 | 12-3 | 3 | #4 | 12-9 | 3 | #4 | 13-6 |
| f9 | str | 3 | #4 | 12-6 | 3 | #4 | 12-9 | 3 | #4 | 13-6 | 3 | #4 | 13-9 | 3 | #4 | 14-6 |
| m1 | str | 3 | #4 | 20-3 | 3 | #4 | 21-0 | 4 | #4 | 22-0 | 4 | #4 | 22-9 | 4 | #4 | 23-9 |
| m2 | str | 1 | #4 | 20-3 | 1 | #4 | 21-0 | 1 | #4 | 22-0 | 1 | #4 | 22-9 | 1 | #4 | 23-9 |
| m3 | str | 3 | #4 | 22-3 | 3 | #4 | 23-3 | 4 | #4 | 24-0 | 4 | #4 | 24-9 | 4 | #4 | 25-6 |
| m4 | str | 1 | #4 | 22-3 | 1 | #4 | 23-3 | 1 | #4 | 24-0 | 1 | #4 | 24-9 | 1 | #4 | 25-6 |
| n1 | str | 3 | #4 | 18-3 | 3 | #4 | 19-0 | 4 | #4 | 19-9 | 4 | #4 | 20-6 | 4 | #4 | 21-3 |
| n2 | str | 1 | #4 | 18-3 | 1 | #4 | 19-0 | 1 | #4 | 19-9 | 1 | #4 | 20-6 | 1 | #4 | 21-3 |
| p | str | 4 | #5 | 13-6 | 4 | #5 | 14-0 | 4 | #5 | 14-6 | 4 | #5 | 15-0 | 4 | #5 | 15-6 |
| q | str | 2 | #6 | 15-6 | 2 | #6 | 16-0 | 2 | #6 | 16-6 | 2 | #6 | 17-0 | 2 | #6 | 17-6 |
| g | str | 2 | #4 | 11-3 | 2 | #4 | 11-9 | 2 | #4 | 12-3 | 2 | #4 | 12-9 | 2 | #4 | 13-3 |
| u | B | 8 | #4 | 4-9 | 8 | #4 | 4-9 | 9 | #4 | 5-0 | 9 | #4 | 5-0 | 9 | #4 | 5-0 |
| v | str | 1 | #4 | 17-9 | 1 | #4 | 18-6 | 1 | #4 | 19-3 | 1 | #4 | 20-0 | 1 | #4 | 20-9 |
| w | str | 1 | #4 | 16-3 | 1 | #4 | 17-0 | 1 | #4 | 17-6 | 1 | #4 | 18-0 | 1 | #4 | 18-6 |

## DIMENSIONS

| Pipe Dia | A | B | C | D | E | F | G | H | J | K | L | M | N | P | R | S | T | V | W | X |
|---|---|---|---|---|---|---|---|---|---|---|---|---|---|---|---|---|---|---|---|---|
| 90" | 0-6 | 2-1 | 2-0 | 1-0 | 5-1 | 13-3 | 5-1 | 9-6 | 6-9 | 16-4 | 7-2 | 4-6 1/4 | 0-4 | 9-1 | 13-6 | 6-2 | 18-6 | 4-0 | 6-1 | 5-5 7/8 |
| 96" | 0-3 | 2-2 | 2-1 | 1-1 | 5-4 | 14-0 | 5-4 | 10-0 | 7-2 | 17-2 | 7-6 | 4-8 3/4 | 0-3 | 9-6 | 14-0 | 6-6 | 19-2 | 4-2 | 6-4 | 5-8 7/8 |
| 102" | 0-1 1/2 | 2-2 | 2-3 | 1-2 | 5-7 | 14-9 | 5-7 | 10-6 | 7-6 | 18-0 5/8 | 7-10 5/8 | 4-11 3/4 | 0-2 | 10-0 | 14-9 | 6-10 | 20-2 | 4-5 | 6-7 | 5-11 7/8 |
| 108" | 0-6 | 2-2 | 2-5 | 1-3 | 5-10 | 15-6 | 5-10 | 11-0 | 7-10 | 18-11 1/8 | 8-3 1/8 | 5-2 3/4 | 0-6 | 10-6 | 15-6 | 7-2 | 21-2 | 4-8 | 6-10 | 6-2 7/8 |
| 114" | 0-3 | 2-3 | 2-6 | 1-4 | 6-1 | 16-3 | 6-1 | 11-6 | 8-2 | 19-9 1/4 | 8-7 1/4 | 5-5 1/4 | 0-4 | 10-11 | 16-0 | 7-6 | 21-10 | 4-10 | 7-1 | 6-5 7/8 |
| 120" | 0-6 | 2-4 | 2-8 | 1-4 | 6-4 | 17-0 | 6-4 | 12-0 | 8-6 | 20-7 1/4 | 8-11 1/4 | 5-7 5/8 | 0-3 | 11-4 | 16-6 | 7-10 | 22-6 | 5-0 | 7-4 | 6-8 7/8 |
| 126" | 0-4 1/2 | 2-6 | 2-8 | 1-5 | 6-7 | 17-9 | 6-7 | 12-6 | 8-10 | 21-5 3/4 | 9-3 7/8 | 5-10 5/8 | 0-2 | 11-10 | 17-3 | 8-2 | 23-6 | 5-3 | 7-9 | 7-2 1/4 |
| 132" | 0-3 | 2-7 | 2-9 | 1-6 | 6-10 | 18-6 | 6-10 | 13-0 | 9-3 | 22-3 7/8 | 9-7 7/8 | 6-1 1/8 | 0-6 | 12-3 | 18-0 | 8-6 | 24-5 | 5-5 | 8-0 | 7-5 1/4 |
| 138" | 0-6 | 2-7 | 2-11 | 1-7 | 7-1 | 19-3 | 7-1 | 13-6 | 9-7 | 23-2 3/8 | 10-0 3/8 | 6-4 1/8 | 0-4 | 12-9 | 18-6 | 8-10 | 25-2 | 5-8 | 8-3 | 7-8 1/4 |
| 144" | 0-3 | 2-8 | 3-0 | 1-8 | 7-4 | 20-0 | 7-5 | 14-0 | 9-11 | 24-0 1/2 | 10-5 1/2 | 6-7 5/8 | 0-3 | 13-3 | 19-0 | 9-3 | 25-10 | 5-11 | 8-7 | 8-0 1/4 |

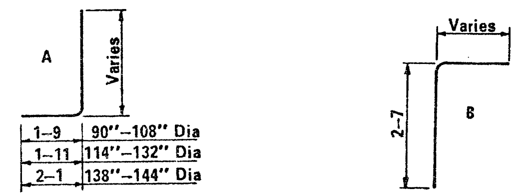


**BENDS**

## QUANTITIES

| Pipe Dia. | Reinf. (lbs) | Conc. (CY) |
|---|---|---|
| 90" | 1235 | 24.21 |
| 96" | 1460 | 26.36 |
| 102" | 1690 | 28.83 |
| 108" | 1805 | 31.40 |
| 114" | 2140 | 33.82 |
| 120" | 2360 | 36.39 |
| 126" | 2745 | 41.74 |
| 132" | 3040 | 44.85 |
| 138" | 3320 | 47.94 |
| 144" | 3720 | 51.22 |

**NOTE:**

Quantities and steel list shown are for one headwall.

Registered Professional Engineer (Civil) — Certificate Expires Dec. 31, 19__ — Ronald Clancy Brechler — Arizona, U.S.A.

DESIGN APPROVED: R C Brechler

APPROVED FOR DISTRIBUTION: [signature]

ARIZONA
DEPARTMENT OF TRANSPORTATION
HIGHWAYS DIVISION
STANDARD PLANS

INLET AND OUTLET HEADWALLS
15° SKEW PIPE CULVERT
4:1 SLOPE

REVISION

STANDARD NO. PH-9

PLAN NO. B-13.30

DESIGN KW 9-72 | DRAWN LAM 9-72 | CHECKED RLC 9-72

## STEEL LIST

| Mark | Bend | 90" Dia | | | 96" Dia | | | 102" Dia | | | 108" Dia | | | 114" Dia | | | 120" Dia | | | 126" Dia | | | 132" Dia | | | 138" Dia | | | 144" Dia | | |
|---|---|---|---|---|---|---|---|---|---|---|---|---|---|---|---|---|---|---|---|---|---|---|---|---|---|---|---|---|---|---|---|
| | | No | Size | Lgth | No | Size | Lgth | No | Size | Lgth | No | Size | Lgth | No | Size | Lgth | No | Size | Lgth | No | Size | Lgth | No | Size | Lgth | No | Size | Lgth | No | Size | Lgth |
| a1 | A | 5 | #5 | 10-0 | 5 | #5 | 10-6 | 5 | #6 | 11-0 | 4 | #6 | 11-6 | 5 | #6 | 12-0 | 5 | #6 | 12-3 | 5 | #7 | 12-6 | 5 | #7 | 12-9 | 5 | #8 | 13-3 | 6 | #8 | 13-9 |
| a2 | A | 4 | #6 | 10-9 | 5 | #6 | 11-3 | 5 | #6 | 11-9 | 4 | #6 | 12-0 | 4 | #7 | 12-6 | 5 | #7 | 13-0 | 5 | #7 | 13-3 | 5 | #8 | 13-9 | 5 | #8 | 14-0 | 5 | #8 | 14-6 |
| a3 | A | 4 | #6 | 11-6 | 4 | #6 | 12-0 | 5 | #7 | 12-3 | 4 | #7 | 12-6 | 4 | #7 | 13-3 | 4 | #8 | 13-9 | 5 | #8 | 14-0 | 5 | #8 | 14-3 | 5 | #8 | 14-9 | 5 | #8 | 15-3 |
| a4 | A | 4 | #6 | 12-0 | 4 | #7 | 12-6 | 4 | #7 | 13-0 | 4 | #7 | 13-0 | 4 | #8 | 13-9 | 4 | #8 | 14-3 | 4 | #8 | 14-9 | 5 | #8 | 15-0 | 5 | #8 | 15-6 | 5 | #8 | 16-0 |
| a5 | A | | | | | | | | | | 4 | #8 | 13-6 | 4 | #8 | 14-3 | 4 | #8 | 14-9 | 4 | #8 | 15-3 | 4 | #8 | 15-9 | 5 | #8 | 16-3 | 5 | #8 | 16-9 |
| a6 | A | | | | | | | | | | | | | | | | | | | | | | | | | | | | | | |
| a7 | A | | | | | | | | | | | | | | | | | | | 3 | #4 | 6-3 | 8 | #4 | 7-0 | 14 | #4 | 7-6 | 19 | #4 | 8-3 |
| a8 | A | 4 | #4 | 10-0 | 5 | #4 | 10-6 | 5 | #5 | 10-9 | 5 | #5 | 11-0 | 5 | #5 | 11-9 | 4 | #6 | 12-0 | 5 | #6 | 12-6 | 5 | #7 | 12-9 | 5 | #7 | 13-3 | 5 | #7 | 13-9 |
| a9 | A | 4 | #5 | 10-6 | 4 | #5 | 11-0 | 5 | #5 | 11-6 | 5 | #6 | 11-9 | 5 | #6 | 12-6 | 4 | #6 | 12-6 | 4 | #7 | 13-0 | 4 | #7 | 13-6 | 5 | #7 | 14-0 | 5 | #7 | 14-6 |
| a10 | A | 4 | #5 | 11-3 | 4 | #6 | 11-9 | 4 | #6 | 12-3 | 4 | #7 | 12-9 | 5 | #7 | 13-3 | 4 | #7 | 13-3 | 4 | #7 | 13-9 | 4 | #7 | 14-3 | 4 | #8 | 14-9 | 5 | #8 | 15-3 |
| a11 | A | 4 | #6 | 12-0 | 4 | #7 | 12-6 | 3 | #7 | 13-0 | 4 | #7 | 13-3 | 4 | #7 | 14-0 | 4 | #7 | 14-0 | 4 | #8 | 14-6 | 4 | #8 | 15-0 | 4 | #8 | 15-6 | 1 | #8 | 16-0 |
| a12 | A | | | | | | | | | | | | | | | | 4 | #8 | 14-6 | 3 | #8 | 15-0 | 4 | #8 | 15-6 | 4 | #8 | 16-3 | 4 | #8 | 16-9 |
| a13 | A | | | | | | | | | | | | | | | | | | | | | | | | | 3 | #4 | 8-0 | 7 | #4 | 8-9 |
| b1 | str | 2 | #4 | 16-3 | 2 | #4 | 17-3 | 2 | #4 | 18-3 | 2 | #4 | 19-3 | 2 | #4 | 20-3 | 2 | #4 | 21-3 | 2 | #4 | 22-3 | 2 | #4 | 23-3 | 2 | #4 | 24-3 | 2 | #4 | 25-3 |
| b2 | str | 10 | #4 | 16-0 | 10 | #4 | 17-0 | 12 | #4 | 18-0 | 12 | #4 | 19-0 | 12 | #4 | 20-0 | 12 | #4 | 21-0 | 14 | #4 | 22-0 | 14 | #4 | 23-0 | 14 | #4 | 24-0 | 14 | #4 | 25-0 |
| b3 | str | 2 | #4 | 12-0 | 2 | #4 | 16-9 | 2 | #4 | 8-9 | 2 | #4 | 12-9 | 2 | #4 | 17-0 | 2 | #4 | 19-3 | 2 | #4 | 11-9 | 2 | #4 | 15-0 | 2 | #4 | 18-9 | 2 | #4 | 23-0 |
| b4 | str | | | | 2 | #4 | 4-9 | | | | | | | 2 | #4 | 5-3 | 2 | #4 | 8-0 | | | | 2 | #4 | 4-3 | 2 | #4 | 9-3 | 2 | #4 | 11-3 |
| b5 | str | | | | | | | | | | | | | | | | | | | | | | | | | | | | | | |
| b6 | str | | | | | | | | | | | | | | | | | | | | | | | | | | | | | | |
| b7 | str | 2 | #4 | 15-3 | 2 | #4 | 16-0 | 2 | #4 | 16-9 | 2 | #4 | 17-6 | 2 | #4 | 18-3 | 2 | #4 | 19-0 | 2 | #4 | 19-9 | 2 | #4 | 20-6 | 2 | #4 | 21-3 | 2 | #4 | 22-0 |
| b8 | str | 10 | #4 | 15-0 | 10 | #4 | 15-9 | 10 | #4 | 16-6 | 12 | #4 | 17-3 | 12 | #4 | 18-0 | 12 | #4 | 18-9 | 14 | #4 | 19-6 | 14 | #4 | 20-3 | 14 | #4 | 21-0 | 14 | #4 | 21-9 |
| b9 | str | 2 | #4 | 10-0 | 2 | #4 | 13-0 | 2 | #4 | 15-9 | 2 | #4 | 9-9 | 2 | #4 | 12-9 | 2 | #4 | 16-0 | 2 | #4 | 10-0 | 2 | #4 | 12-9 | 2 | #4 | 15-9 | 2 | #4 | 19-0 |
| b10 | str | | | | 2 | #4 | 3-9 | 2 | #4 | 6-9 | | | | 2 | #4 | 4-0 | 2 | #4 | 7-0 | | | | 2 | #4 | 3-6 | 2 | #4 | 6-9 | 2 | #4 | 9-9 |
| b11 | str | | | | | | | | | | | | | | | | | | | | | | | | | | | | | | |
| b12 | str | | | | | | | | | | | | | | | | | | | | | | | | | | | | | | |
| c | str | 5 | #4 | 10-6 | 5 | #4 | 11-0 | 5 | #4 | 11-6 | 5 | #4 | 12-0 | 5 | #4 | 12-6 | 5 | #4 | 13-0 | 5 | #4 | 13-6 | 5 | #4 | 14-0 | 5 | #4 | 14-6 | 5 | #4 | 15-0 |
| d | A | 6 | #6 | 12-3 | 6 | #6 | 12-9 | 6 | #7 | 13-3 | 6 | #7 | 13-9 | 6 | #7 | 14-6 | 6 | #7 | 15-0 | 6 | #7 | 15-6 | 6 | #7 | 16-0 | 6 | #7 | 16-6 | 6 | #7 | 17-0 |
| e1 | str | 5 | #4 | 3-6 | 5 | #4 | 3-6 | 5 | #4 | 3-9 | 4 | #4 | 3-9 | 5 | #4 | 4-0 | 5 | #5 | 4-0 | 5 | #5 | 4-3 | 5 | #5 | 4-3 | 5 | #6 | 4-6 | 6 | #6 | 4-9 |
| e2 | str | 4 | #4 | 3-9 | 5 | #4 | 3-9 | 5 | #4 | 4-0 | 4 | #4 | 4-0 | 4 | #5 | 4-3 | 5 | #5 | 4-3 | 5 | #5 | 4-6 | 5 | #6 | 4-9 | 5 | #6 | 5-0 | 5 | #6 | 5-3 |
| e3 | str | 4 | #4 | 4-0 | 4 | #4 | 4-0 | 5 | #5 | 4-3 | 4 | #5 | 4-3 | 4 | #5 | 4-6 | 4 | #5 | 4-9 | 5 | #6 | 4-9 | 5 | #6 | 5-0 | 5 | #6 | 5-3 | 5 | #7 | 5-6 |
| e4 | str | 4 | #4 | 4-3 | 4 | #5 | 4-3 | 4 | #5 | 4-6 | 4 | #5 | 4-6 | 4 | #5 | 4-9 | 4 | #6 | 5-0 | 4 | #6 | 5-3 | 5 | #6 | 5-6 | 5 | #7 | 5-9 | 5 | #7 | 6-0 |
| e5 | str | | | | | | | | | | 4 | #5 | 4-9 | 4 | #6 | 5-0 | 4 | #6 | 5-3 | 4 | #6 | 5-6 | 4 | #7 | 5-9 | 5 | #7 | 6-0 | 5 | #8 | 6-3 |
| e6 | str | | | | | | | | | | | | | | | | | | | | | | | | | | | | | | |
| e7 | str | 2 | #4 | 4-3 | 2 | #5 | 4-6 | 2 | #5 | 4-9 | 2 | #5 | 5-0 | 2 | #6 | 5-3 | 2 | #6 | 5-6 | 2 | #6 | 5-9 | 2 | #7 | 6-0 | 2 | #7 | 6-3 | 2 | #8 | 6-6 |
| e8 | str | 10 | #4 | 4-3 | 11 | #5 | 4-6 | 11 | #5 | 4-9 | 12 | #5 | 5-0 | 12 | #6 | 5-3 | 13 | #6 | 5-6 | 13 | #6 | 5-9 | 14 | #7 | 6-0 | 14 | #7 | 6-3 | 14 | #8 | 6-6 |
| e9 | str | 3 | #4 | 4-3 | 3 | #5 | 4-6 | 3 | #5 | 4-9 | 3 | #5 | 5-0 | 4 | #6 | 5-3 | 4 | #6 | 5-6 | 4 | #6 | 5-9 | 4 | #7 | 6-0 | 4 | #7 | 6-3 | 4 | #8 | 6-6 |
| e10 | str | 4 | #4 | 4-3 | 4 | #5 | 4-3 | 4 | #5 | 4-6 | 4 | #5 | 4-9 | 4 | #6 | 5-0 | 4 | #6 | 5-3 | 4 | #6 | 5-6 | 4 | #7 | 5-9 | 4 | #7 | 6-0 | 4 | #8 | 6-3 |
| e11 | str | 4 | #4 | 4-0 | 4 | #5 | 4-0 | 4 | #5 | 4-3 | 4 | #5 | 4-6 | 5 | #5 | 4-9 | 4 | #6 | 5-0 | 4 | #6 | 5-3 | 4 | #6 | 5-6 | 4 | #7 | 5-9 | 4 | #7 | 6-0 |
| e12 | str | 4 | #4 | 3-9 | 4 | #4 | 3-9 | 5 | #4 | 4-0 | 5 | #4 | 4-3 | 5 | #5 | 4-6 | 4 | #5 | 4-9 | 4 | #6 | 4-9 | 4 | #6 | 5-0 | 4 | #6 | 5-3 | 5 | #7 | 5-6 |
| e13 | str | 4 | #4 | 3-6 | 5 | #4 | 3-6 | 5 | #4 | 3-9 | 5 | #4 | 3-9 | 5 | #4 | 4-0 | 4 | #5 | 4-3 | 4 | #5 | 4-6 | 4 | #5 | 4-9 | 5 | #6 | 5-0 | 5 | #6 | 5-3 |
| e14 | str | | | | | | | | | | | | | | | | 4 | #5 | 4-0 | 5 | #5 | 4-3 | 5 | #5 | 4-3 | 5 | #6 | 4-6 | 5 | #6 | 4-9 |
| f1 | str | 3 | #4 | 8-6 | 3 | #4 | 9-0 | 4 | #4 | 9-3 | 4 | #4 | 9-9 | 4 | #4 | 10-0 | 4 | #4 | 10-3 | 4 | #4 | 10-6 | 4 | #4 | 10-9 | 4 | #4 | 11-3 | 4 | #4 | 11-9 |
| f2 | str | 3 | #4 | 9-0 | 3 | #4 | 9-6 | 3 | #4 | 10-0 | 4 | #4 | 10-6 | 4 | #4 | 10-9 | 4 | #4 | 11-0 | 4 | #4 | 11-6 | 4 | #4 | 11-9 | 4 | #4 | 12-3 | 4 | #4 | 12-6 |
| f3 | str | 3 | #4 | 9-9 | 3 | #4 | 10-0 | 3 | #4 | 10-9 | 3 | #4 | 11-3 | 3 | #4 | 11-9 | 4 | #4 | 11-9 | 4 | #4 | 12-0 | 4 | #4 | 12-6 | 3 | #4 | 13-0 | 4 | #4 | 13-3 |
| f4 | str | 3 | #4 | 10-3 | 3 | #4 | 10-9 | 3 | #4 | 11-3 | 3 | #4 | 11-9 | 3 | #4 | 12-3 | 3 | #4 | 12-9 | 4 | #4 | 13-0 | 4 | #4 | 13-6 | 3 | #4 | 13-9 | 3 | #4 | 14-3 |
| f5 | str | | | | | | | | | | | | | | | | | | | | | | | | | 3 | #4 | 14-3 | 3 | #4 | 14-9 |
| f6 | str | 4 | #4 | 8-3 | 4 | #4 | 8-6 | 4 | #4 | 9-0 | 4 | #4 | 9-3 | 4 | #4 | 9-9 | 4 | #4 | 10-3 | 4 | #4 | 10-6 | 4 | #4 | 10-9 | 4 | #4 | 11-3 | 4 | #4 | 11-9 |
| f7 | str | 4 | #4 | 9-3 | 4 | #4 | 9-6 | 4 | #4 | 9-9 | 4 | #4 | 10-3 | 3 | #4 | 10-6 | 3 | #4 | 11-0 | 4 | #4 | 11-6 | 4 | #4 | 11-9 | 4 | #4 | 12-3 | 4 | #4 | 12-6 |
| f8 | str | 3 | #4 | 10-3 | 3 | #4 | 10-6 | 4 | #4 | 10-9 | 4 | #4 | 11-3 | 3 | #4 | 11-3 | 3 | #4 | 12-0 | 3 | #4 | 12-6 | 3 | #4 | 12-9 | 4 | #4 | 13-3 | 4 | #4 | 13-6 |
| f9 | str | | | | | | | | | | | | | 3 | #4 | 12-3 | 3 | #4 | 12-6 | 3 | #4 | 13-3 | 3 | #4 | 13-6 | 3 | #4 | 14-3 | 3 | #4 | 14-6 |
| m1 | str | 3 | #4 | 18-9 | 3 | #4 | 19-9 | 3 | #4 | 21-3 | 3 | #4 | 22-0 | 4 | #4 | 23-3 | 4 | #4 | 24-6 | 4 | #4 | 25-6 | 4 | #4 | 26-6 | 4 | #4 | 27-9 | 4 | #4 | 28-6 |
| m2 | str | 1 | #4 | 18-9 | 1 | #4 | 19-9 | 1 | #4 | 21-3 | 1 | #4 | 22-0 | 1 | #4 | 23-3 | 1 | #4 | 24-6 | 1 | #4 | 25-6 | 1 | #4 | 26-6 | 1 | #4 | 27-9 | 1 | #4 | 28-6 |
| m3 | str | 3 | #4 | 19-6 | 3 | #4 | 20-6 | 3 | #4 | 21-6 | 3 | #4 | 22-6 | 4 | #4 | 23-3 | 4 | #4 | 24-3 | 4 | #4 | 25-3 | 4 | #4 | 26-3 | 4 | #4 | 27-3 | 4 | #4 | 28-3 |
| m4 | str | 1 | #4 | 19-6 | 1 | #4 | 20-6 | 1 | #4 | 21-6 | 1 | #4 | 22-6 | 1 | #4 | 23-3 | 1 | #4 | 24-3 | 1 | #4 | 25-3 | 1 | #4 | 26-3 | 1 | #4 | 27-3 | 1 | #4 | 28-3 |
| n1 | str | 3 | #4 | 16-0 | 3 | #4 | 16-9 | 3 | #4 | 17-6 | 3 | #4 | 18-3 | 4 | #4 | 19-0 | 4 | #4 | 19-9 | 4 | #4 | 20-6 | 4 | #4 | 21-3 | 4 | #4 | 22-3 | 4 | #4 | 23-3 |
| n2 | str | 1 | #4 | 16-0 | 1 | #4 | 16-9 | 1 | #4 | 17-6 | 1 | #4 | 18-3 | 1 | #4 | 19-0 | 1 | #4 | 19-9 | 1 | #4 | 20-6 | 1 | #4 | 21-3 | 1 | #4 | 22-3 | 1 | #4 | 23-3 |
| p | str | 4 | #5 | 11-0 | 4 | #5 | 11-6 | 4 | #5 | 12-0 | 4 | #5 | 12-6 | 4 | #5 | 13-0 | 4 | #5 | 13-6 | 4 | #5 | 14-0 | 4 | #5 | 14-6 | 4 | #5 | 15-0 | 4 | #5 | 15-6 |
| q | str | 2 | #6 | 13-0 | 2 | #6 | 13-6 | 2 | #6 | 14-0 | 2 | #6 | 14-6 | 2 | #6 | 15-0 | 2 | #6 | 15-6 | 2 | #6 | 16-0 | 2 | #6 | 16-6 | 2 | #6 | 17-0 | 2 | #6 | 17-6 |
| g | str | 2 | #4 | 9-6 | 2 | #4 | 9-9 | 2 | #4 | 10-3 | 2 | #4 | 10-9 | 2 | #4 | 11-0 | 2 | #4 | 11-6 | 2 | #4 | 12-0 | 2 | #4 | 12-6 | 2 | #4 | 13-0 | 2 | #4 | 13-6 |
| u | B | 7 | #4 | 4-6 | 7 | #4 | 4-6 | 7 | #4 | 4-6 | 8 | #4 | 4-9 | 8 | #4 | 4-9 | 8 | #4 | 4-9 | 8 | #4 | 4-9 | 9 | #4 | 5-0 | 9 | #4 | 5-0 | 9 | #4 | 5-0 |
| v | str | 1 | #4 | 16-3 | 1 | #4 | 17-3 | 1 | #4 | 18-3 | 1 | #4 | 19-3 | 1 | #4 | 20-3 | 1 | #4 | 21-3 | 1 | #4 | 22-3 | 1 | #4 | 23-3 | 1 | #4 | 24-3 | 1 | #4 | 25-3 |
| w | str | 1 | #4 | 15-3 | 1 | #4 | 15-9 | 1 | #4 | 16-6 | 1 | #4 | 17-3 | 1 | #4 | 17-9 | 1 | #4 | 18-6 | 1 | #4 | 19-3 | 1 | #4 | 20-3 | 1 | #4 | 20-9 | 1 | #4 | 21-6 |

## DIMENSIONS

| Pipe Dia | A | B | C | D | E | F | G | H | J | K | L | M | N | P | R | S | T | V | W | X |
|---|---|---|---|---|---|---|---|---|---|---|---|---|---|---|---|---|---|---|---|---|
| 90" | 0-3 | 2-1 | 2-3 | 0-9 | 5-1 | 16-0 | 5-1 | 9-6 | 7-4 | 19-1 | 7-2 | 4-6 1/4 | 0-3 | 9-1 | 15-0 | 7-0 | 20-0 | 4-0 | 6-1 | 5-5 7/8 |
| 96" | 0-1 1/2 | 2-2 | 2-4 | 0-10 | 5-4 | 17-0 | 5-4 | 10-0 | 7-9 | 20-2 | 7-6 | 4-8 3/4 | 0-3 | 9-6 | 15-9 | 7-5 | 20-11 | 4-2 | 6-4 | 5-8 7/8 |
| 102" | 0-6 | 2-2 | 2-6 | 0-11 | 5-7 | 18-0 | 5-7 | 10-6 | 8-2 | 21-3 5/8 | 7-10 5/8 | 4-11 3/4 | 0-3 | 10-0 | 16-6 | 7-9 | 21-11 | 4-5 | 6-7 | 5-11 7/8 |
| 108" | 0-4 1/2 | 2-3 | 2-8 | 0-11 | 5-10 | 19-0 | 5-10 | 11-0 | 8-7 | 22-4 5/8 | 8-2 5/8 | 5-2 | 0-3 | 10-5 | 17-3 | 8-1 | 22-10 | 4-7 | 6-10 | 6-2 7/8 |
| 114" | 0-3 | 2-4 | 2-10 | 0-11 | 6-1 | 20-0 | 6-1 | 11-6 | 9-0 | 23-5 5/8 | 8-6 5/8 | 5-4 5/8 | 0-3 | 10-10 | 18-0 | 8-6 | 23-9 | 4-9 | 7-1 | 6-5 7/8 |
| 120" | 0-1 1/2 | 2-4 | 2-11 | 1-1 | 6-4 | 21-0 | 6-4 | 12-0 | 9-2 | 24-7 1/4 | 8-11 1/4 | 5-7 5/8 | 0-3 | 11-4 | 18-9 | 8-11 | 24-9 | 5-0 | 7-4 | 6-8 7/8 |
| 126" | 0-6 | 2-6 | 2-10 | 1-3 | 6-7 | 22-0 | 6-7 | 12-6 | 9-6 | 25-8 3/4 | 9-3 3/4 | 5-10 5/8 | 0-3 | 11-10 | 19-6 | 9-3 | 25-9 | 5-3 | 7-9 | 7-2 1/4 |
| 132" | 0-4 1/2 | 2-7 | 3-0 | 1-3 | 6-10 | 23-0 | 6-10 | 13-0 | 9-10 | 26-9 7/8 | 9-7 7/8 | 6-1 1/8 | 0-3 | 12-3 | 20-3 | 9-7 | 26-8 | 5-5 | 8-0 | 7-5 1/4 |
| 138" | 0-3 | 2-7 | 3-1 | 1-5 | 7-1 | 24-0 | 7-1 | 13-6 | 10-3 | 27-11 3/8 | 10-0 3/8 | 6-4 1/8 | 0-3 | 12-9 | 21-0 | 10-0 | 27-8 | 5-8 | 8-3 | 7-8 1/4 |
| 144" | 0-1 1/2 | 2-8 | 3-3 | 1-5 | 7-4 | 25-0 | 7-5 | 14-0 | 10-7 | 29-0 1/2 | 10-5 1/2 | 6-7 5/8 | 0-3 | 13-3 | 21-9 | 10-5 | 28-7 | 5-11 | 8-7 | 8-0 1/4 |

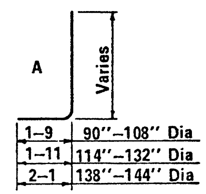


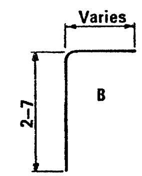


**BENDS**

## QUANTITIES

| Pipe Dia. | Reinf. (lbs) | Conc. (CY) |
|---|---|---|
| 90" | 1435 | 27.29 |
| 96" | 1680 | 29.93 |
| 102" | 1915 | 32.73 |
| 108" | 2180 | 35.65 |
| 114" | 2560 | 38.73 |
| 120" | 2890 | 41.76 |
| 126" | 3180 | 47.88 |
| 132" | 3610 | 51.49 |
| 138" | 4060 | 55.22 |
| 144" | 4530 | 59.31 |

**NOTE:**

Quantities and steel list shown are for one headwall.

Registered Professional Engineer (Civil)
CERTIFICATE EXPIRES DEC. 31, 19...
RONALD CONWAY BREUHLER
ARIZONA, U.S.A.

| DESIGN APPROVED | ARIZONA DEPARTMENT OF TRANSPORTATION HIGHWAYS DIVISION STANDARD PLANS | REVISION |
|---|---|---|
| APPROVED FOR DISTRIBUTION | INLET AND OUTLET HEADWALLS 15° SKEW PIPE CULVERT 6:1 SLOPE | STANDARD NO. PH-10 PLAN NO. B-13.40 |

DESIGN KW 9-72 | DRAWN LAM 9-72 | CHECKED RLC 9-72

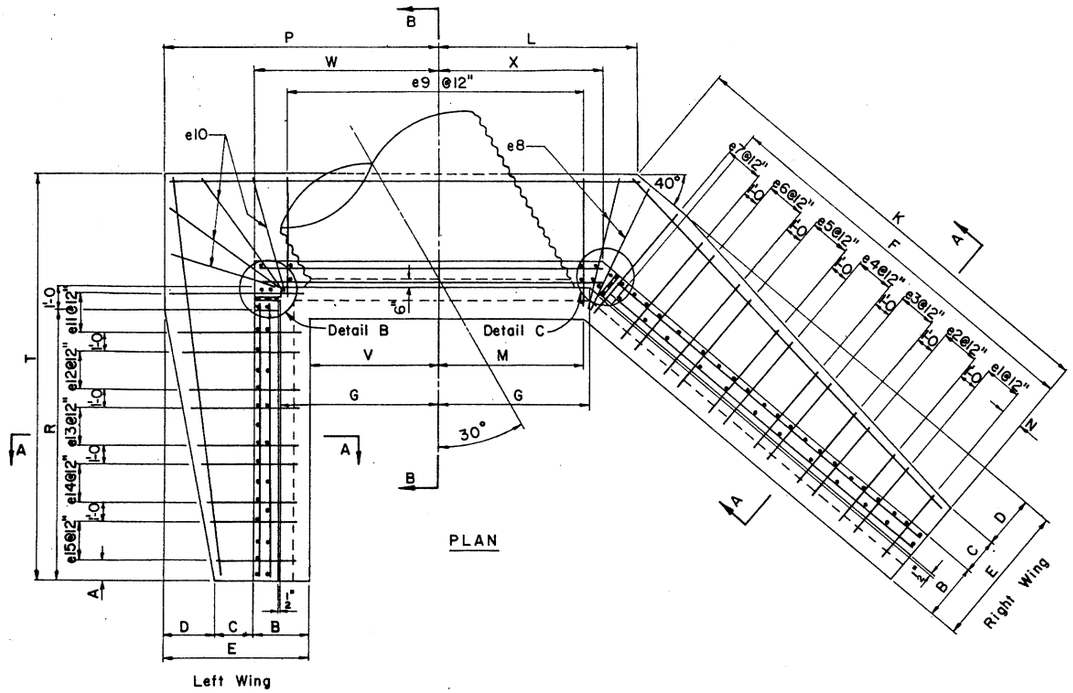


PLAN

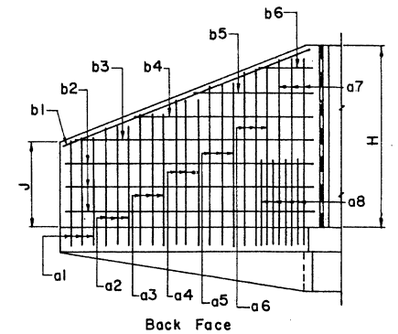


RIGHT WING ELEVATION

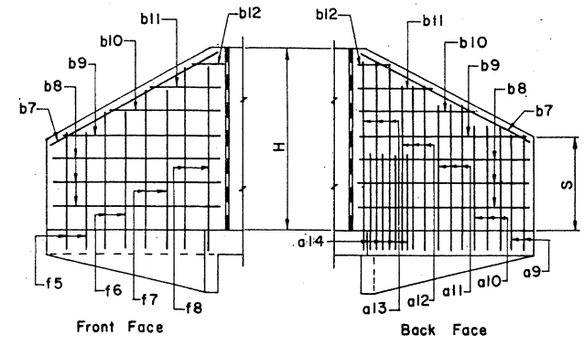


LEFT WING ELEVATION

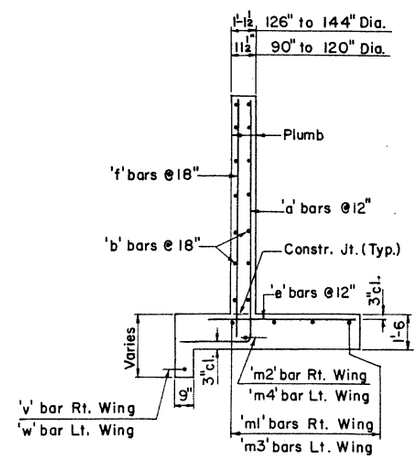


SECTION A-A

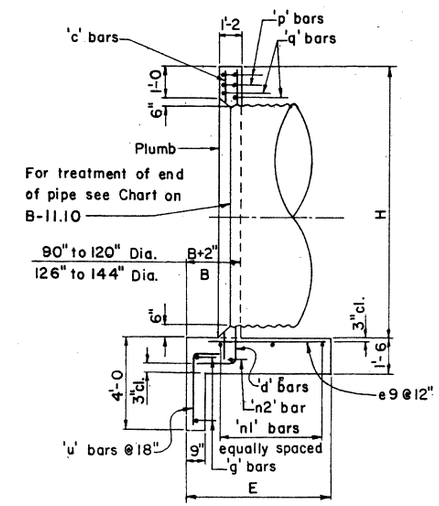


SECTION B-B

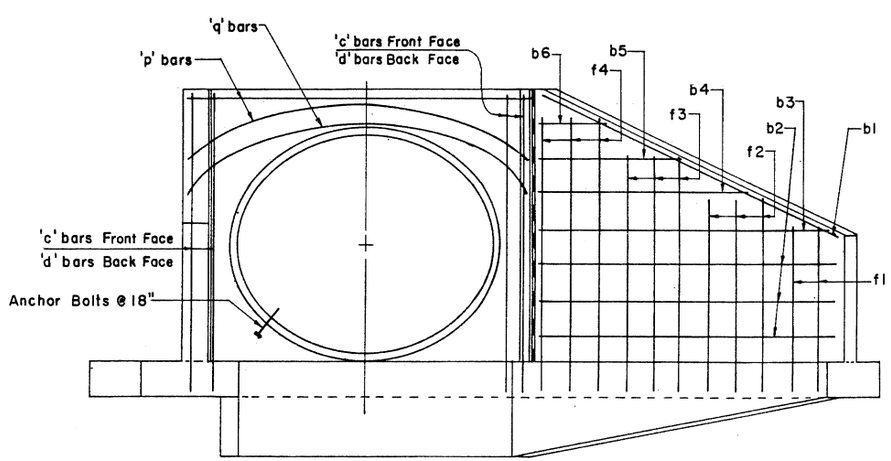


ELEVATION

Notes: For General Notes and Misc. Details see B-11.10.
For steel list and bend diagrams see B-14.20, B-14.30 or B-14.40.

| DESIGN | K.W. | 9-72 | N.O. | DESCRIPTION OF REVISIONS | MADE BY | DATE |
|---|---|---|---|---|---|---|
| DRAWN | G.H. | 9-72 | 1 | Revised E of pipe. | WBK'sss | 2-11-75 |
| CHECKED | R.L.C. | 9-72 | 2 | Wall Thicknesses | G.H. | 7-14-76 |
| | | | 3 | | | |

| DESIGN APPROVED | ARIZONA DEPARTMENT OF TRANSPORTATION HIGHWAYS DIVISION STANDARD PLANS | REVISION |
|---|---|---|
| R.C. Beechler | | |
| APPROVED FOR DISTRIBUTION | INLET & OUTLET HEADWALLS 30° SKEW PIPE CULVERT | STANDARD NO. PH-11 |
| E.A. Sandelin | | PLAN NO. B-14.10 |

## STEEL LIST

| Mark | Bend | 90" Dia | | | 96" Dia | | | 102" Dia | | | 108" Dia | | | 114" Dia | | | 120" Dia | | | 126" Dia | | | 132" Dia | | | 138" Dia | | | 144" Dia | | |
|---|---|---|---|---|---|---|---|---|---|---|---|---|---|---|---|---|---|---|---|---|---|---|---|---|---|---|---|---|---|---|---|
| | | No | Size | Lgth | No | Size | Lgth | No | Size | Lgth | No | Size | Lgth | No | Size | Lgth | No | Size | Lgth | No | Size | Lgth | No | Size | Lgth | No | Size | Lgth | No | Size | Lgth |
| a1 | A | 3 | #4 | 8-3 | 3 | #4 | 8-6 | 3 | #4 | 8-9 | 3 | #4 | 9-0 | 3 | #4 | 9-3 | 3 | #4 | 9-6 | 3 | #5 | 9-9 | 3 | #5 | 10-0 | 3 | #5 | 10-3 | 4 | #5 | 10-9 |
| a2 | A | 3 | #4 | 9-3 | 3 | #5 | 9-6 | 3 | #5 | 9-9 | 3 | #5 | 9-9 | 3 | #5 | 10-3 | 3 | #5 | 10-6 | 3 | #5 | 10-9 | 3 | #6 | 11-0 | 3 | #6 | 11-3 | 3 | #6 | 12-0 |
| a3 | A | 3 | #5 | 10-3 | 3 | #5 | 10-6 | 3 | #5 | 10-9 | 3 | #5 | 10-9 | 3 | #6 | 11-3 | 3 | #6 | 11-6 | 3 | #6 | 11-9 | 3 | #7 | 12-0 | 3 | #7 | 12-3 | 3 | #7 | 12-9 |
| a4 | A | 3 | #6 | 11-3 | 3 | #6 | 11-6 | 3 | #6 | 11-6 | 3 | #6 | 11-9 | 3 | #7 | 12-3 | 3 | #7 | 12-3 | 3 | #7 | 12-9 | 3 | #8 | 13-0 | 3 | #8 | 13-3 | 3 | #8 | 13-9 |
| a5 | A | 2 | #6 | 12-0 | 3 | #7 | 12-6 | 2 | #7 | 12-6 | 2 | #7 | 12-9 | 3 | #7 | 13-3 | 2 | #8 | 13-3 | 3 | #8 | 13-9 | 3 | #8 | 14-0 | 3 | #8 | 14-3 | 3 | #8 | 14-9 |
| a6 | A | | | | | | | 2 | #7 | 13-3 | 2 | #8 | 13-9 | 2 | #8 | 14-3 | 2 | #8 | 14-0 | 2 | #8 | 14-6 | 3 | #8 | 14-9 | 3 | #8 | 15-3 | 3 | #8 | 15-9 |
| a7 | A | | | | | | | | | | | | | | | | 2 | #8 | 14-9 | 2 | #8 | 15-3 | 2 | #8 | 15-9 | 3 | #8 | 16-3 | 2 | #8 | 16-9 |
| a8 | A | | | | | | | | | | | | | | | | 3 | #4 | 6-3 | 3 | #4 | 6-9 | 7 | #4 | 7-6 | 8 | #4 | 8-0 | 7 | #4 | 8-3 |
| a9 | A | 3 | #4 | 7-9 | 3 | #4 | 8-0 | 3 | #4 | 8-3 | 3 | #4 | 8-6 | 3 | #4 | 9-0 | 3 | #4 | 9-3 | 3 | #4 | 9-6 | 3 | #5 | 9-9 | 3 | #5 | 10-0 | 3 | #5 | 10-3 |
| a10 | A | 3 | #5 | 9-0 | 3 | #5 | 9-6 | 3 | #5 | 9-9 | 3 | #5 | 10-0 | 3 | #5 | 10-3 | 3 | #6 | 10-9 | 3 | #6 | 11-0 | 3 | #6 | 11-3 | 3 | #6 | 11-6 | 3 | #6 | 11-9 |
| a11 | A | 2 | #6 | 10-6 | 3 | #6 | 11-0 | 3 | #6 | 11-3 | 3 | #6 | 11-6 | 2 | #6 | 11-9 | 3 | #7 | 12-3 | 3 | #7 | 12-6 | 3 | #7 | 12-9 | 3 | #7 | 13-0 | 3 | #8 | 13-3 |
| a12 | A | 2 | #6 | 11-6 | 2 | #7 | 12-0 | 2 | #7 | 12-6 | 3 | #7 | 13-0 | 2 | #7 | 13-0 | 2 | #7 | 13-6 | 2 | #7 | 13-9 | 3 | #8 | 14-3 | 3 | #8 | 14-6 | 3 | #8 | 15-0 |
| a13 | A | | | | | | | | | | | | | 2 | #7 | 14-0 | 2 | #7 | 14-9 | 2 | #7 | 15-3 | 2 | #8 | 15-9 | 2 | #8 | 16-0 | 3 | #8 | 16-6 |
| a14 | A | | | | | | | | | | | | | 3 | #4 | 6-0 | 4 | #4 | 6-0 | 4 | #4 | 6-0 | 4 | #4 | 7-0 | 4 | #4 | 7-0 | 8 | #4 | 7-0 |
| b1 | str | 2 | #4 | 13-6 | 2 | #4 | 14-3 | 2 | #4 | 15-0 | 2 | #4 | 15-9 | 2 | #4 | 16-9 | 2 | #4 | 17-9 | 2 | #4 | 18-6 | 2 | #4 | 19-3 | 2 | #4 | 20-3 | 2 | #4 | 21-0 |
| b2 | str | 8 | #4 | 13-3 | 8 | #4 | 14-0 | 8 | #4 | 14-9 | 8 | #4 | 15-6 | 10 | #4 | 16-6 | 10 | #4 | 17-6 | 10 | #4 | 18-3 | 10 | #4 | 19-0 | 10 | #4 | 19-9 | 10 | #4 | 20-6 |
| b3 | str | 2 | #4 | 10-0 | 2 | #4 | 11-6 | 2 | #4 | 13-3 | 2 | #4 | 14-9 | 2 | #4 | 11-9 | 2 | #4 | 13-3 | 2 | #4 | 14-9 | 2 | #4 | 16-3 | 2 | #4 | 17-6 | 2 | #4 | 19-6 |
| b4 | str | 2 | #4 | 5-6 | 2 | #4 | 6-9 | 2 | #4 | 8-6 | 2 | #4 | 10-0 | 2 | #4 | 7-0 | 2 | #4 | 8-6 | 2 | #4 | 10-3 | 2 | #4 | 11-9 | 2 | #4 | 13-0 | 2 | #4 | 14-9 |
| b5 | str | | | | | | | 2 | #4 | 3-3 | 2 | #4 | 5-6 | 2 | #4 | 2-0 | 2 | #4 | 3-9 | 2 | #4 | 5-3 | 2 | #4 | 7-0 | 2 | #4 | 8-6 | 2 | #4 | 10-3 |
| b6 | str | | | | | | | | | | | | | | | | | | | | | | | | | 2 | #4 | 4-0 | 2 | #4 | 5-6 |
| b7 | str | 2 | #4 | 10-3 | 2 | #4 | 10-9 | 2 | #4 | 11-3 | 2 | #4 | 11-9 | 2 | #4 | 12-3 | 2 | #4 | 12-9 | 2 | #4 | 13-3 | 2 | #4 | 14-0 | 2 | #4 | 14-6 | 2 | #4 | 15-0 |
| b8 | str | 8 | #4 | 9-6 | 8 | #4 | 10-0 | 8 | #4 | 10-6 | 8 | #4 | 11-0 | 8 | #4 | 11-6 | 8 | #4 | 12-0 | 10 | #4 | 12-6 | 10 | #4 | 13-0 | 10 | #4 | 13-6 | 10 | #4 | 14-0 |
| b9 | str | 2 | #4 | 6-6 | 2 | #4 | 7-6 | 2 | #4 | 8-6 | 2 | #4 | 9-6 | 2 | #4 | 10-6 | 2 | #4 | 11-6 | 2 | #4 | 9-6 | 2 | #4 | 10-6 | 2 | #4 | 11-3 | 2 | #4 | 12-3 |
| b10 | str | 2 | #4 | 3-6 | 2 | #4 | 4-6 | 2 | #4 | 5-6 | 2 | #4 | 6-6 | 2 | #4 | 7-6 | 2 | #4 | 8-6 | 2 | #4 | 6-6 | 2 | #4 | 7-6 | 2 | #4 | 8-3 | 2 | #4 | 9-3 |
| b11 | str | | | | 2 | #4 | 1-6 | 2 | #4 | 2-6 | 2 | #4 | 3-6 | 2 | #4 | 4-6 | 2 | #4 | 5-6 | 2 | #4 | 3-3 | 2 | #4 | 4-6 | 2 | #4 | 5-3 | 2 | #4 | 6-6 |
| b12 | str | | | | | | | | | | | | | 2 | #4 | 1-6 | 2 | #4 | 2-6 | | | | 2 | #4 | 1-3 | 2 | #4 | 2-3 | 2 | #4 | 3-3 |
| c | str | 5 | #4 | 10-6 | 5 | #4 | 11-0 | 5 | #4 | 11-6 | 5 | #4 | 12-0 | 5 | #4 | 12-6 | 5 | #4 | 13-0 | 5 | #4 | 13-6 | 5 | #4 | 14-0 | 5 | #4 | 14-6 | 5 | #4 | 15-0 |
| d | A | 6 | #6 | 12-3 | 6 | #6 | 12-9 | 6 | #7 | 13-3 | 6 | #7 | 13-9 | 6 | #7 | 14-6 | 6 | #7 | 15-0 | 6 | #7 | 15-6 | 6 | #7 | 16-0 | 6 | #7 | 16-6 | 6 | #7 | 17-0 |
| e1 | str | 3 | #4 | 2-3 | 3 | #4 | 2-3 | 3 | #4 | 2-6 | 3 | #4 | 2-6 | 3 | #4 | 2-6 | 3 | #4 | 2-9 | 3 | #4 | 2-9 | 3 | #4 | 3-0 | 3 | #4 | 3-0 | 4 | #4 | 3-6 |
| e2 | str | 3 | #4 | 2-9 | 3 | #4 | 2-9 | 3 | #4 | 3-0 | 3 | #4 | 3-0 | 3 | #4 | 3-0 | 3 | #4 | 3-3 | 3 | #4 | 3-3 | 3 | #4 | 3-6 | 3 | #4 | 3-6 | 3 | #4 | 3-9 |
| e3 | str | 3 | #4 | 3-3 | 3 | #4 | 3-6 | 3 | #4 | 3-3 | 3 | #4 | 3-6 | 3 | #4 | 3-6 | 3 | #4 | 3-9 | 3 | #4 | 3-9 | 3 | #4 | 4-0 | 3 | #5 | 4-0 | 3 | #5 | 4-3 |
| e4 | str | 3 | #4 | 3-9 | 3 | #4 | 4-0 | 3 | #4 | 3-9 | 3 | #4 | 4-0 | 3 | #5 | 4-3 | 3 | #5 | 4-3 | 3 | #5 | 4-3 | 3 | #5 | 4-6 | 3 | #5 | 4-6 | 3 | #6 | 4-9 |
| e5 | str | 2 | #4 | 4-3 | 3 | #5 | 4-6 | 2 | #5 | 4-3 | 3 | #5 | 4-6 | 3 | #5 | 4-9 | 3 | #5 | 4-6 | 3 | #6 | 4-9 | 3 | #6 | 5-0 | 3 | #6 | 5-0 | 3 | #6 | 5-3 |
| e6 | str | | | | | | | 2 | #5 | 4-9 | 2 | #5 | 5-0 | 3 | #6 | 5-3 | 2 | #6 | 5-0 | 2 | #6 | 5-3 | 2 | #7 | 5-6 | 3 | #7 | 5-9 | 3 | #7 | 6-0 |
| e7 | str | | | | | | | | | | | | | | | | 2 | #6 | 5-6 | 2 | #7 | 5-9 | 2 | #7 | 6-0 | 3 | #7 | 6-3 | 3 | #8 | 6-6 |
| e8 | str | 2 | #4 | 4-3 | 2 | #5 | 4-6 | 2 | #5 | 4-9 | 2 | #5 | 5-0 | 2 | #6 | 5-3 | 2 | #6 | 5-6 | 2 | #7 | 5-9 | 2 | #7 | 6-0 | 2 | #7 | 6-3 | 2 | #8 | 6-6 |
| e9 | str | 11 | #4 | 4-3 | 11 | #5 | 4-6 | 12 | #5 | 4-9 | 12 | #5 | 5-0 | 13 | #6 | 5-3 | 13 | #6 | 5-6 | 14 | #7 | 5-9 | 14 | #7 | 6-0 | 15 | #7 | 6-3 | 16 | #8 | 6-6 |
| e10 | str | 4 | #4 | 4-3 | 4 | #5 | 4-6 | 4 | #5 | 4-9 | 4 | #5 | 5-0 | 4 | #6 | 5-3 | 4 | #6 | 5-6 | 4 | #7 | 5-9 | 4 | #7 | 6-0 | 4 | #7 | 6-3 | 4 | #8 | 6-6 |
| e11 | str | 2 | #4 | 4-3 | 2 | #5 | 4-6 | 3 | #5 | 4-9 | 3 | #5 | 4-6 | 2 | #6 | 5-3 | 2 | #6 | 5-6 | 2 | #7 | 5-9 | 2 | #7 | 6-0 | 3 | #7 | 6-3 | 3 | #8 | 6-6 |
| e12 | str | 3 | #4 | 3-6 | 3 | #4 | 3-9 | 3 | #4 | 4-0 | 3 | #5 | 4-0 | 2 | #5 | 4-9 | 2 | #6 | 5-0 | 3 | #6 | 5-0 | 3 | #6 | 5-3 | 3 | #7 | 5-6 | 3 | #7 | 5-9 |
| e13 | str | 3 | #4 | 3-0 | 3 | #4 | 3-0 | 3 | #4 | 3-3 | 3 | #4 | 3-3 | 3 | #5 | 4-0 | 3 | #5 | 4-3 | 3 | #5 | 4-3 | 3 | #5 | 4-6 | 3 | #5 | 4-6 | 3 | #6 | 4-9 |
| e14 | str | 3 | #4 | 2-3 | 3 | #4 | 2-3 | 3 | #4 | 2-6 | 3 | #4 | 2-9 | 3 | #4 | 3-3 | 3 | #4 | 3-6 | 3 | #4 | 3-6 | 3 | #4 | 3-9 | 3 | #4 | 3-9 | 3 | #5 | 4-0 |
| e15 | str | | | | | | | | | | | | | 3 | #4 | 2-6 | 3 | #4 | 2-9 | 3 | #4 | 2-9 | 3 | #4 | 3-0 | 3 | #4 | 3-0 | 3 | #4 | 3-6 |
| f1 | str | 3 | #4 | 6-6 | 3 | #4 | 6-9 | 3 | #4 | 7-0 | 3 | #4 | 7-3 | 3 | #4 | 7-6 | 4 | #4 | 7-6 | 4 | #4 | 7-9 | 4 | #4 | 8-0 | 4 | #4 | 8-3 | 4 | #4 | 8-9 |
| f2 | str | 3 | #4 | 8-0 | 3 | #4 | 8-3 | 3 | #4 | 8-6 | 3 | #4 | 8-9 | 3 | #4 | 9-0 | 3 | #4 | 9-6 | 3 | #4 | 9-9 | 4 | #4 | 10-0 | 4 | #4 | 10-3 | 4 | #4 | 10-6 |
| f3 | str | 2 | #4 | 9-3 | 2 | #4 | 9-9 | 3 | #4 | 10-0 | 3 | #4 | 10-3 | 3 | #4 | 10-6 | 3 | #4 | 10-9 | 3 | #4 | 11-3 | 3 | #4 | 12-0 | 3 | #4 | 12-3 | 3 | #4 | 12-6 |
| f4 | str | 2 | #4 | 10-6 | 2 | #4 | 10-9 | 2 | #4 | 11-0 | 2 | #4 | 11-6 | 3 | #4 | 11-9 | 3 | #4 | 12-3 | 3 | #4 | 12-9 | 3 | #4 | 13-3 | 3 | #4 | 13-9 | 3 | #4 | 14-0 |
| f5 | str | 3 | #4 | 6-0 | 3 | #4 | 6-0 | 3 | #4 | 6-6 | 3 | #4 | 6-9 | 3 | #4 | 7-0 | 3 | #4 | 7-3 | 3 | #4 | 7-6 | 3 | #4 | 7-9 | 3 | #4 | 8-0 | 3 | #4 | 8-3 |
| f6 | str | 2 | #4 | 8-3 | 3 | #4 | 8-3 | 3 | #4 | 8-9 | 3 | #4 | 9-0 | 2 | #4 | 9-3 | 2 | #4 | 9-6 | 2 | #4 | 9-9 | 3 | #4 | 9-9 | 3 | #4 | 10-3 | 3 | #4 | 10-6 |
| f7 | str | 2 | #4 | 9-9 | 2 | #4 | 10-6 | 2 | #4 | 11-0 | 2 | #4 | 11-3 | 2 | #4 | 10-9 | 2 | #4 | 11-0 | 2 | #4 | 11-3 | 2 | #4 | 12-0 | 2 | #4 | 12-6 | 2 | #4 | 12-9 |
| f8 | str | | | | | | | | | | | | | 2 | #4 | 12-3 | 2 | #4 | 12-6 | 2 | #4 | 12-9 | 2 | #4 | 13-9 | 2 | #4 | 14-0 | 2 | #4 | 14-3 |
| m1 | str | 3 | #4 | 15-6 | 3 | #4 | 16-0 | 3 | #4 | 17-0 | 3 | #4 | 18-0 | 4 | #4 | 19-0 | 4 | #4 | 20-0 | 4 | #4 | 20-9 | 4 | #4 | 21-6 | 4 | #4 | 22-6 | 4 | #4 | 23-3 |
| m2 | str | 1 | #4 | 15-6 | 1 | #4 | 16-0 | 1 | #4 | 17-0 | 1 | #4 | 18-0 | 1 | #4 | 19-0 | 1 | #4 | 20-0 | 1 | #4 | 20-9 | 1 | #4 | 21-6 | 1 | #4 | 22-6 | 1 | #4 | 23-3 |
| m3 | str | 3 | #4 | 14-0 | 3 | #4 | 14-9 | 3 | #4 | 15-6 | 3 | #4 | 16-3 | 4 | #4 | 17-0 | 4 | #4 | 17-6 | 4 | #4 | 18-3 | 4 | #4 | 19-0 | 4 | #4 | 19-9 | 4 | #4 | 20-6 |
| m4 | str | 1 | #4 | 14-0 | 1 | #4 | 14-9 | 1 | #4 | 15-6 | 1 | #4 | 16-3 | 1 | #4 | 17-0 | 1 | #4 | 17-6 | 1 | #4 | 18-3 | 1 | #4 | 19-0 | 1 | #4 | 19-9 | 1 | #4 | 20-6 |
| n1 | str | 3 | #4 | 15-9 | 3 | #4 | 16-9 | 3 | #4 | 17-9 | 3 | #4 | 18-9 | 4 | #4 | 19-6 | 4 | #4 | 20-3 | 4 | #4 | 21-3 | 4 | #4 | 22-0 | 4 | #4 | 23-0 | 4 | #4 | 23-6 |
| n2 | str | 1 | #4 | 15-9 | 1 | #4 | 16-9 | 1 | #4 | 17-9 | 1 | #4 | 18-9 | 1 | #4 | 19-6 | 1 | #4 | 20-3 | 1 | #4 | 21-3 | 1 | #4 | 22-0 | 1 | #4 | 23-0 | 1 | #4 | 23-6 |
| p | str | 4 | #5 | 11-9 | 4 | #5 | 12-6 | 4 | #5 | 13-0 | 4 | #5 | 13-6 | 4 | #5 | 14-3 | 4 | #5 | 14-6 | 4 | #5 | 15-6 | 4 | #5 | 16-0 | 4 | #5 | 16-6 | 4 | #5 | 17-0 |
| q | str | 2 | #6 | 13-9 | 2 | #6 | 14-6 | 2 | #6 | 15-0 | 2 | #6 | 15-6 | 2 | #6 | 16-3 | 2 | #6 | 16-6 | 2 | #6 | 17-6 | 2 | #6 | 18-0 | 2 | #6 | 18-6 | 2 | #6 | 19-0 |
| g | str | 2 | #4 | 10-0 | 2 | #4 | 10-6 | 2 | #4 | 11-3 | 2 | #4 | 11-9 | 2 | #4 | 12-3 | 2 | #4 | 12-9 | 2 | #4 | 13-3 | 2 | #4 | 13-9 | 2 | #4 | 14-3 | 2 | #4 | 14-9 |
| u | B | 7 | #4 | 4-6 | 8 | #4 | 4-6 | 8 | #4 | 4-6 | 8 | #4 | 4-9 | 9 | #4 | 4-9 | 9 | #4 | 4-9 | 9 | #4 | 4-9 | 10 | #4 | 5-0 | 10 | #4 | 5-0 | 10 | #4 | 5-0 |
| v | str | 1 | #4 | 14-3 | 1 | #4 | 15-0 | 1 | #4 | 15-9 | 1 | #4 | 16-6 | 1 | #4 | 17-3 | 1 | #4 | 18-3 | 1 | #4 | 19-0 | 1 | #4 | 20-0 | 1 | #4 | 20-9 | 1 | #4 | 21-3 |
| w | str | 1 | #4 | 9-6 | 1 | #4 | 9-9 | 1 | #4 | 10-3 | 1 | #4 | 10-9 | 1 | #4 | 11-3 | 1 | #4 | 11-9 | 1 | #4 | 12-3 | 1 | #4 | 12-9 | 1 | #4 | 13-3 | 1 | #4 | 13-6 |

## DIMENSIONS

| Pipe Dia | A | B | C | D | E | F | G | H | J | K | L | M | N | P | R | S | T | V | W | X |
|---|---|---|---|---|---|---|---|---|---|---|---|---|---|---|---|---|---|---|---|---|
| 90" | 0-6 | 2-1 | 1-4 | 1-8 | 5-1 | 13-3 | 5-5 | 9-6 | 5-3 | 15-8 1/2 | 6-10 3/8 | 5-0 1/4 | 0-4 | 9-5 | 9-6 | 4-9 | 14-6 | 4-4 | 6-5 | 5-7 |
| 96" | 0-3 | 2-2 | 1-5 | 1-9 | 5-4 | 14-0 | 5-9 | 10-0 | 5-6 | 16-6 1/4 | 7-3 1/4 | 5-3 7/8 | 0-3 | 9-11 | 10-0 | 5-0 | 15-2 | 4-7 | 6-9 | 5-11 |
| 102" | 0-6 | 2-2 | 1-6 | 1-11 | 5-7 | 14-9 | 6-1 | 10-6 | 5-9 | 17-4 1/4 | 7-8 1/4 | 5-7 7/8 | 0-2 | 10-6 | 10-6 | 5-3 | 15-11 | 4-11 | 7-1 | 6-3 |
| 108" | 0-3 | 2-2 | 1-8 | 2-0 | 5-10 | 15-6 | 6-4 | 11-0 | 6-0 | 18-2 3/8 | 8-0 3/8 | 5-10 7/8 | 0-6 | 11-0 | 11-0 | 5-6 | 16-8 | 5-2 | 7-4 | 6-6 |
| 114" | 0-6 | 2-3 | 1-8 | 2-2 | 6-1 | 16-6 | 6-8 | 11-6 | 6-3 | 19-3 1/8 | 8-5 1/8 | 6-2 1/2 | 0-6 | 11-6 | 11-6 | 5-9 | 17-4 | 5-5 | 7-8 | 6-10 |
| 120" | 0-3 | 2-4 | 1-10 | 2-2 | 6-4 | 17-6 | 6-11 | 12-0 | 6-5 | 20-3 7/8 | 8-8 7/8 | 6-5 1/8 | 0-6 | 11-11 | 12-0 | 6-0 | 18-0 | 5-7 | 7-11 | 7-1 |
| 126" | 0-6 | 2-6 | 1-8 | 2-5 | 6-7 | 18-3 | 7-3 | 12-6 | 6-8 | 21-1 7/8 | 9-1 7/8 | 6-9 1/8 | 0-4 | 12-6 | 12-6 | 6-3 | 18-9 | 5-11 | 8-5 | 7-8 1/8 |
| 132" | 0-3 | 2-6 | 1-10 | 2-6 | 6-10 | 19-0 | 7-6 | 13-0 | 6-11 | 22-0 | 9-6 | 7-0 1/8 | 0-3 | 13-0 | 13-0 | 6-6 | 19-6 | 6-2 | 8-8 | 7-11 1/8 |
| 138" | 0-6 | 2-7 | 2-0 | 2-6 | 7-1 | 19-9 | 7-10 | 13-6 | 7-2 | 22-9 3/4 | 9-10 3/4 | 7-3 7/8 | 0-2 | 13-6 | 13-6 | 6-9 | 20-2 | 6-5 | 9-0 | 8-3 1/8 |
| 144" | 0-3 | 2-8 | 2-2 | 2-6 | 7-4 | 20-6 | 8-1 | 14-0 | 7-6 | 23-7 1/2 | 10-2 1/2 | 7-6 1/2 | 0-6 | 13-11 | 14-0 | 7-0 | 20-10 | 6-7 | 9-3 | 8-6 1/8 |

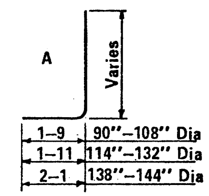


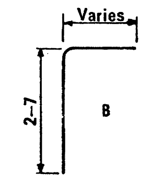


**BENDS**

## QUANTITIES

| Pipe Dia. | Reinf. (lbs) | Conc. (CY) |
|---|---|---|
| 90" | 1065 | 21.88 |
| 96" | 1240 | 23.04 |
| 102" | 1395 | 25.20 |
| 108" | 1505 | 27.38 |
| 114" | 1800 | 29.79 |
| 120" | 2025 | 32.22 |
| 126" | 2250 | 36.76 |
| 132" | 2585 | 39.45 |
| 138" | 2775 | 42.38 |
| 144" | 3075 | 45.27 |

NOTE:

Quantities and steel list shown are for one headwall.

Registered Professional Engineer (Civil) — Certificate Expires Dec. 31, 19— — Ronald Clancy Buechler — Arizona, U.S.A.

| DESIGN APPROVED: RC Buechler | ARIZONA DEPARTMENT OF TRANSPORTATION HIGHWAYS DIVISION STANDARD PLANS | REVISION |
|---|---|---|
| APPROVED FOR DISTRIBUTION | INLET AND OUTLET HEADWALLS<br>30° SKEW PIPE CULVERT<br>2:1 SLOPE | STANDARD NO. PH-12<br>PLAN NO. B-14.20 |

DESIGN KW 9-72 | DRAWN LAM 9-72 | CHECKED RLC 9-72

## STEEL LIST

| Mark | Bend | 90" Dia No | Size | Lgth | 96" Dia No | Size | Lgth | 102" Dia No | Size | Lgth | 108" Dia No | Size | Lgth | 114" Dia No | Size | Lgth |
|---|---|---|---|---|---|---|---|---|---|---|---|---|---|---|---|---|
| a1 | A | 4 | #5 | 10-0 | 4 | #5 | 10-6 | 4 | #5 | 10-9 | 4 | #6 | 11-3 | 4 | #6 | 11-9 |
| a2 | A | 3 | #5 | 10-6 | 4 | #6 | 11-0 | 4 | #6 | 11-3 | 4 | #6 | 11-9 | 4 | #6 | 12-3 |
| a3 | A | 3 | #6 | 11-0 | 3 | #6 | 11-9 | 3 | #6 | 12-0 | 4 | #7 | 12-6 | 4 | #7 | 13-0 |
| a4 | A | 3 | #6 | 11-9 | 3 | #6 | 12-3 | 3 | #7 | 12-6 | 3 | #7 | 13-0 | 4 | #7 | 13-9 |
| a5 | A | 3 | #6 | 12-0 | 2 | #7 | 12-6 | 3 | #7 | 13-0 | 3 | #7 | 13-6 | 3 | #8 | 14-3 |
| a6 | A | | | | | | | | | | | | | | | |
| a7 | A | | | | | | | | | | | | | | | |
| a8 | A | | | | | | | | | | | | | | | |
| a9 | A | 3 | #4 | 9-0 | 3 | #4 | 9-6 | 4 | #5 | 9-9 | 4 | #5 | 10-0 | 4 | #6 | 10-9 |
| a10 | A | 3 | #4 | 9-9 | 3 | #5 | 10-3 | 3 | #5 | 10-9 | 4 | #6 | 11-0 | 4 | #6 | 11-6 |
| a11 | A | 3 | #5 | 10-6 | 3 | #6 | 11-0 | 3 | #6 | 11-6 | 3 | #7 | 12-0 | 3 | #7 | 12-6 |
| a12 | A | 3 | #6 | 11-3 | 3 | #6 | 11-9 | 3 | #7 | 12-3 | 3 | #7 | 12-9 | 3 | #7 | 13-3 |
| a13 | A | 2 | #6 | 11-9 | 3 | #7 | 12-3 | 3 | #7 | 12-9 | 2 | #7 | 13-6 | 3 | #8 | 14-0 |
| a14 | A | | | | | | | | | | | | | | | |
| b1 | str | 2 | #4 | 15-0 | 2 | #4 | 15-9 | 2 | #4 | 16-6 | 2 | #4 | 17-3 | 2 | #4 | 18-0 |
| b2 | str | 10 | #4 | 14-9 | 10 | #4 | 15-6 | 12 | #4 | 16-3 | 12 | #4 | 17-0 | 12 | #4 | 17-9 |
| b3 | str | 2 | #4 | 9-9 | 2 | #4 | 13-6 | 2 | #4 | 7-9 | 2 | #4 | 10-6 | 2 | #4 | 13-6 |
| b4 | str | | | | 2 | #4 | 4-6 | | | | | | | 2 | #4 | 4-0 |
| b5 | str | | | | | | | | | | | | | | | |
| b6 | str | 2 | #4 | 13-6 | 2 | #4 | 14-0 | 2 | #4 | 14-9 | 2 | #4 | 15-6 | 2 | #4 | 16-0 |
| b7 | str | 8 | #4 | 13-6 | 10 | #4 | 14-0 | 10 | #4 | 14-9 | 10 | #4 | 15-6 | 10 | #4 | 16-0 |
| b8 | str | 2 | #4 | 12-9 | 2 | #4 | 8-9 | 2 | #4 | 10-9 | 2 | #4 | 12-9 | 2 | #4 | 14-6 |
| b9 | str | 2 | #4 | 6-9 | 2 | #4 | 2-9 | 2 | #4 | 4-9 | 2 | #4 | 6-9 | 2 | #4 | 8-6 |
| b10 | str | | | | | | | | | | | | | 2 | #4 | 2-9 |
| b11 | str | | | | | | | | | | | | | | | |
| b12 | str | | | | | | | | | | | | | | | |
| c | str | 5 | #4 | 10-6 | 5 | #4 | 11-0 | 5 | #4 | 11-6 | 5 | #4 | 12-0 | 5 | #4 | 12-6 |
| d | A | 6 | #6 | 12-3 | 6 | #6 | 12-9 | 6 | #7 | 13-3 | 6 | #7 | 13-9 | 6 | #7 | 14-6 |
| e1 | str | 4 | #4 | 3-0 | 4 | #4 | 3-3 | 4 | #4 | 3-3 | 4 | #4 | 3-6 | 4 | #4 | 3-9 |
| e2 | str | 3 | #4 | 3-3 | 4 | #4 | 3-6 | 4 | #4 | 3-6 | 4 | #4 | 3-9 | 4 | #5 | 4-3 |
| e3 | str | 3 | #4 | 3-6 | 3 | #4 | 3-9 | 3 | #4 | 3-9 | 4 | #5 | 4-3 | 4 | #5 | 4-6 |
| e4 | str | 3 | #4 | 3-9 | 3 | #4 | 4-0 | 3 | #5 | 4-3 | 3 | #5 | 4-6 | 4 | #5 | 4-9 |
| e5 | str | 3 | #4 | 4-0 | 3 | #5 | 4-3 | 3 | #5 | 4-6 | 3 | #5 | 4-9 | 3 | #6 | 5-0 |
| e6 | str | | | | | | | | | | | | | | | |
| e7 | str | | | | | | | | | | | | | | | |
| e8 | str | 2 | #4 | 4-3 | 2 | #5 | 4-6 | 2 | #5 | 4-9 | 2 | #5 | 5-0 | 2 | #6 | 5-0 |
| e9 | str | 10 | #4 | 4-3 | 11 | #5 | 4-6 | 11 | #5 | 4-9 | 12 | #5 | 5-0 | 12 | #6 | 5-0 |
| e10 | str | 4 | #4 | 4-3 | 4 | #5 | 4-6 | 4 | #5 | 4-9 | 4 | #5 | 5-0 | 4 | #6 | 5-0 |
| e11 | str | 3 | #4 | 4-0 | 3 | #5 | 4-3 | 4 | #5 | 4-6 | 3 | #5 | 4-9 | 3 | #6 | 4-9 |
| e12 | str | 3 | #4 | 3-9 | 3 | #4 | 4-0 | 4 | #4 | 4-0 | 3 | #5 | 4-6 | 3 | #5 | 4-6 |
| e13 | str | 3 | #4 | 3-6 | 3 | #4 | 3-9 | 4 | #4 | 3-9 | 3 | #4 | 4-0 | 3 | #4 | 4-3 |
| e14 | str | 3 | #4 | 3-3 | 3 | #4 | 3-6 | 4 | #4 | 3-3 | 4 | #4 | 3-9 | 4 | #4 | 4-0 |
| e15 | str | 3 | #4 | 3-0 | 3 | #4 | 3-0 | | | | 4 | #4 | 3-6 | 4 | #4 | 3-9 |
| f1 | str | 4 | #4 | 8-3 | 4 | #4 | 8-9 | 3 | #4 | 9-0 | 3 | #4 | 9-6 | 4 | #4 | 9-9 |
| f2 | str | 4 | #4 | 9-3 | 4 | #4 | 9-9 | 3 | #4 | 9-9 | 3 | #4 | 10-3 | 3 | #4 | 10-9 |
| f3 | str | 3 | #4 | 10-3 | 3 | #4 | 10-9 | 3 | #4 | 10-6 | 3 | #4 | 11-0 | 3 | #4 | 11-6 |
| f4 | str | | | | | | | 3 | #4 | 11-3 | 3 | #4 | 11-9 | 3 | #4 | 12-3 |
| f5 | str | 4 | #4 | 7-3 | 4 | #4 | 7-9 | 4 | #4 | 8-0 | 4 | #4 | 8-6 | 3 | #4 | 8-9 |
| f6 | str | 3 | #4 | 8-9 | 3 | #4 | 9-3 | 4 | #4 | 9-6 | 4 | #4 | 10-0 | 3 | #4 | 9-9 |
| f7 | str | 3 | #4 | 10-0 | 3 | #4 | 10-3 | 3 | #4 | 11-0 | 3 | #4 | 11-6 | 3 | #4 | 10-9 |
| f8 | str | | | | | | | | | | | | | 3 | #4 | 12-0 |
| m1 | str | 3 | #4 | 17-0 | 3 | #4 | 17-9 | 3 | #4 | 18-6 | 3 | #4 | 19-6 | 3 | #4 | 20-3 |
| m2 | str | 1 | #4 | 17-0 | 1 | #4 | 17-9 | 1 | #4 | 18-6 | 1 | #4 | 19-6 | 1 | #4 | 20-3 |
| m3 | str | 3 | #4 | 18-3 | 3 | #4 | 18-9 | 3 | #4 | 19-9 | 3 | #4 | 20-9 | 3 | #4 | 21-6 |
| m4 | str | 1 | #4 | 18-3 | 1 | #4 | 18-9 | 1 | #4 | 19-9 | 1 | #4 | 20-9 | 1 | #4 | 21-6 |
| n1 | str | 3 | #4 | 15-6 | 3 | #4 | 16-6 | 3 | #4 | 17-6 | 3 | #4 | 18-6 | 3 | #4 | 19-3 |
| n2 | str | 1 | #4 | 15-6 | 1 | #4 | 16-6 | 1 | #4 | 17-6 | 1 | #4 | 18-6 | 1 | #4 | 19-3 |
| p | str | 4 | #5 | 11-9 | 4 | #5 | 12-3 | 4 | #5 | 13-0 | 4 | #5 | 13-6 | 4 | #5 | 14-0 |
| q | str | 2 | #6 | 12-9 | 2 | #6 | 13-3 | 2 | #6 | 14-0 | 2 | #6 | 14-6 | 2 | #6 | 15-0 |
| g | str | 2 | #4 | 9-6 | 2 | #4 | 10-0 | 2 | #4 | 10-9 | 2 | #4 | 11-3 | 2 | #4 | 11-9 |
| u | B | 7 | #4 | 4-0 | 8 | #4 | 4-0 | 8 | #4 | 4-0 | 8 | #4 | 4-0 | 9 | #4 | 4-3 |
| v | str | 1 | #4 | 15-9 | 1 | #4 | 16-3 | 1 | #4 | 17-3 | 1 | #4 | 17-9 | 1 | #4 | 18-6 |
| w | str | 1 | #4 | 14-0 | 1 | #4 | 14-6 | 1 | #4 | 15-0 | 1 | #4 | 15-9 | 1 | #4 | 16-3 |

| Mark | Bend | 120" Dia No | Size | Lgth | 126" Dia No | Size | Lgth | 132" Dia No | Size | Lgth | 138" Dia No | Size | Lgth | 144" Dia No | Size | Lgth |
|---|---|---|---|---|---|---|---|---|---|---|---|---|---|---|---|---|
| a1 | A | 4 | #6 | 12-3 | 4 | #7 | 12-6 | 5 | #7 | 13-0 | 5 | #7 | 13-3 | 5 | #8 | 13-9 |
| a2 | A | 4 | #7 | 12-9 | 4 | #7 | 13-0 | 4 | #8 | 13-9 | 5 | #8 | 14-3 | 5 | #8 | 14-9 |
| a3 | A | 4 | #7 | 13-3 | 4 | #8 | 13-9 | 4 | #8 | 14-3 | 4 | #8 | 15-0 | 4 | #8 | 15-6 |
| a4 | A | 4 | #8 | 14-0 | 4 | #8 | 14-6 | 4 | #8 | 15-0 | 4 | #8 | 15-6 | 4 | #8 | 16-0 |
| a5 | A | 3 | #8 | 14-6 | 4 | #8 | 15-0 | 4 | #8 | 15-6 | 3 | #8 | 16-3 | 4 | #8 | 16-9 |
| a6 | A | | | | | | | | | | | | | | | |
| a7 | A | | | | | | | | | | | | | | | |
| a8 | A | | | | 3 | #4 | 8-0 | 7 | #4 | 8-3 | 10 | #4 | 8-9 | 11 | #4 | 8-3 |
| a9 | A | 4 | #6 | 11-0 | 4 | #6 | 11-3 | 4 | #6 | 11-9 | 4 | #6 | 12-0 | 4 | #7 | 12-6 |
| a10 | A | 4 | #6 | 12-0 | 4 | #7 | 12-3 | 4 | #7 | 12-6 | 4 | #7 | 13-0 | 4 | #7 | 13-6 |
| a11 | A | 4 | #7 | 13-0 | 4 | #8 | 13-3 | 4 | #8 | 13-6 | 4 | #8 | 14-0 | 4 | #8 | 14-6. |
| a12 | A | 3 | #8 | 14-0 | 3 | #8 | 14-3 | 4 | #8 | 14-6 | 4 | #8 | 15-0 | 4 | #8 | 15-6 |
| a13 | A | 2 | #8 | 14-9 | 3 | #8 | 15-0 | 3 | #8 | 15-6 | 3 | #8 | 16-0 | 4 | #8 | 16-6 |
| a14 | A | | | | 2 | #4 | 7-0 | 6 | #4 | 6-6 | 6 | #4 | 7-3 | 7 | #4 | 7-9 |
| b1 | str | 2 | #4 | 18-9 | 2 | #4 | 19-6 | 2 | #4 | 20-0 | 2 | #4 | 20-9 | 2 | #4 | 21-3 |
| b2 | str | 12 | #4 | 18-6 | 14 | #4 | 19-3 | 14 | #4 | 19-9 | 14 | #4 | 20-6 | 14 | #4 | 21-0 |
| b3 | str | 2 | #4 | 16-9 | 2 | #4 | 10-6 | 2 | #4 | 13-6 | 2 | #4 | 16-3 | 2 | #4 | 19-3 |
| b4 | str | 2 | #4 | 7-3 | | | | 2 | #4 | 4-3 | 2 | #4 | 7-0 | 2 | #4 | 10-0 |
| b5 | str | | | | | | | | | | | | | | | |
| b6 | str | 2 | #4 | 16-6 | 2 | #4 | 17-3 | 2 | #4 | 18-0 | 2 | #4 | 18-6 | 2 | #4 | 19-0 |
| b7 | str | 12 | #4 | 16-6 | 12 | #4 | 17-3 | 12 | #4 | 18-0 | 12 | #4 | 18-6 | 12 | #4 | 19-0 |
| b8 | str | 2 | #4 | 10-9 | 2 | #4 | 12-6 | 2 | #4 | 14-6 | 2 | #4 | 16-6 | 2 | #4 | 18-6 |
| b9 | str | 2 | #4 | 4-9 | 2 | #4 | 6-6 | 2 | #4 | 8-9 | 2 | #4 | 10-9 | 2 | #4 | 12-6 |
| b10 | str | | | | | | | 2 | #4 | 2-6 | 2 | #4 | 4-6 | 2 | #4 | 6-9 |
| b11 | str | | | | | | | | | | | | | | | |
| b12 | str | | | | | | | | | | | | | | | |
| c | str | 5 | #4 | 13-0 | 5 | #4 | 13-6 | 5 | #4 | 14-0 | 5 | #4 | 14-6 | 5 | #4 | 15-0 |
| d | A | 6 | #7 | 15-0 | 6 | #7 | 15-6 | 6 | #7 | 16-0 | 6 | #7 | 16-6 | 6 | #7 | 17-0 |
| e1 | str | 4 | #4 | 4-0 | 4 | #5 | 4-3 | 5 | #5 | 4-3 | 5 | #5 | 4-6 | 5 | #5 | 4-9 |
| e2 | str | 4 | #5 | 4-3 | 4 | #5 | 4-6 | 4 | #6 | 4-6 | 5 | #6 | 4-9 | 5 | #6 | 5-0 |
| e3 | str | 4 | #5 | 4-6 | 4 | #6 | 4-9 | 4 | #6 | 5-0 | 4 | #6 | 5-0 | 4 | #7 | 5-3 |
| e4 | str | 4 | #6 | 4-9 | 4 | #6 | 5-0 | 4 | #7 | 5-3 | 4 | #7 | 5-6 | 4 | #7 | 5-9 |
| e5 | str | 4 | #6 | 5-0 | 4 | #7 | 5-3 | 4 | #7 | 5-6 | 4 | #7 | 5-9 | 4 | #8 | 6-0 |
| e6 | str | | | | | | | | | | | | | | | |
| e7 | str | | | | | | | | | | | | | | | |
| e8 | str | 2 | #6 | 5-3 | 2 | #7 | 5-6 | 2 | #7 | 5-9 | 2 | #7 | 6-0 | 2 | #8 | 6-3 |
| e9 | str | 13 | #6 | 5-3 | 13 | #7 | 5-6 | 14 | #7 | 5-9 | 14 | #7 | 6-0 | 15 | #8 | 6-3 |
| e10 | str | 4 | #6 | 5-3 | 4 | #7 | 5-6 | 4 | #7 | 5-9 | 4 | #7 | 6-0 | 4 | #8 | 6-3 |
| e11 | str | 3 | #6 | 5-0 | 3 | #7 | 5-3 | 3 | #7 | 5-6 | 4 | #7 | 5-9 | 4 | #8 | 6-0 |
| e12 | str | 3 | #6 | 4-9 | 3 | #6 | 5-0 | 4 | #6 | 5-3 | 4 | #7 | 5-6 | 4 | #7 | 5-9 |
| e13 | str | 4 | #5 | 4-6 | 4 | #5 | 4-9 | 4 | #6 | 4-9 | 4 | #6 | 5-0 | 4 | #6 | 5-3 |
| e14 | str | 4 | #4 | 4-3 | 4 | #4 | 4-3 | 4 | #5 | 4-6 | 4 | #5 | 4-9 | 4 | #5 | 5-0 |
| e15 | str | 4 | #4 | 4-0 | 4 | #4 | 4-0 | 4 | #4 | 4-3 | 4 | #4 | 4-6 | 4 | #4 | 4-6 |
| f1 | str | 4 | #4 | 10-3 | 4 | #4 | 10-6 | 4 | #4 | 11-0 | 4 | #4 | 11-3 | 4 | #4 | 11-9 |
| f2 | str | 3 | #4 | 11-3 | 4 | #4 | 11-6 | 4 | #4 | 12-0 | 4 | #4 | 12-3 | 4 | #4 | 12-9 |
| f3 | str | 3 | #4 | 12-0 | 3 | #4 | 12-6 | 3 | #4 | 13-0 | 4 | #4 | 13-3 | 4 | #4 | 13-9 |
| f4 | str | 3 | #4 | 12-6 | 3 | #4 | 13-3 | 3 | #4 | 13-9 | 3 | #4 | 14-3 | 3 | #4 | 14-9 |
| f5 | str | 3 | #4 | 9-0 | 3 | #4 | 9-6 | 4 | #4 | 9-9 | 4 | #4 | 10-0 | 4 | #4 | 10-6 |
| f6 | str | 3 | #4 | 10-3 | 3 | #4 | 10-6 | 3 | #4 | 11-3 | 3 | #4 | 11-6 | 4 | #4 | 12-0 |
| f7 | str | 3 | #4 | 11-3 | 3 | #4 | 11-9 | 3 | #4 | 12-3 | 3 | #4 | 12-9 | 3 | #4 | 13-6 |
| f8 | str | 3 | #4 | 12-6 | 3 | #4 | 12-9 | 3 | #4 | 13-6 | 3 | #4 | 13-9 | 3 | #4 | 14-6 |
| m1 | str | 3 | #4 | 21-0 | 3 | #4 | 21-9 | 4 | #4 | 22-6 | 4 | #4 | 23-3 | 4 | #4 | 23-9 |
| m2 | str | 1 | #4 | 21-0 | 1 | #4 | 21-9 | 1 | #4 | 22-6 | 1 | #4 | 23-3 | 1 | #4 | 23-9 |
| m3 | str | 3 | #4 | 22-3 | 3 | #4 | 23-3 | 4 | #4 | 24-0 | 4 | #4 | 24-9 | 4 | #4 | 25-6 |
| m4 | str | 1 | #4 | 22-3 | 1 | #4 | 23-3 | 1 | #4 | 24-0 | 1 | #4 | 24-9 | 1 | #4 | 25-6 |
| n1 | str | 3 | #4 | 20-0 | 3 | #4 | 21-0 | 4 | #4 | 21-9 | 4 | #4 | 22-9 | 4 | #4 | 23-3 |
| n2 | str | 1 | #4 | 20-0 | 1 | #4 | 21-0 | 1 | #4 | 21-9 | 1 | #4 | 22-9 | 1 | #4 | 23-3 |
| p | str | 4 | #5 | 14-6 | 4 | #5 | 15-3 | 4 | #5 | 15-9 | 4 | #5 | 16-6 | 4 | #5 | 17-0 |
| q | str | 2 | #6 | 15-6 | 2 | #6 | 16-3 | 2 | #6 | 16-9 | 2 | #6 | 17-6 | 2 | #6 | 18-0 |
| g | str | 2 | #4 | 12-0 | 2 | #4 | 12-9 | 2 | #4 | 13-3 | 2 | #4 | 14-0 | 2 | #4 | 14-3 |
| u | B | 9 | #4 | 4-3 | 9 | #4 | 4-3 | 10 | #4 | 4-3 | 10 | #4 | 4-6 | 10 | #4 | 4-6 |
| v | str | 1 | #4 | 19-3 | 1 | #4 | 20-3 | 1 | #4 | 20-6 | 1 | #4 | 21-3 | 1 | #4 | 21-9 |
| w | str | 1 | #4 | 16-9 | 1 | #4 | 17-6 | 1 | #4 | 17-9 | 1 | #4 | 18-6 | 1 | #4 | 19-0 |

## DIMENSIONS

| Pipe Dia | A | B | C | D | E | F | G | H | J | K | L | M | N | P | R | S | T | V | W | X |
|---|---|---|---|---|---|---|---|---|---|---|---|---|---|---|---|---|---|---|---|---|
| 90" | 0-6 | 2-1 | 2-2 | 0-10 | 5-1 | 14-9 | 5-5 | 9-6 | 7-2 | 17-2 1/2 | 6-10 1/4 | 5-0 1/4 | 0-2 | 9-5 | 13-6 | 6-2 | 18-6 | 4-4 | 6-5 | 5-7 |
| 96" | 0-3 | 2-2 | 2-4 | 0-10 | 5-4 | 15-6 | 5-9 | 10-0 | 7-6 | 18-0 1/4 | 7-3 1/4 | 5-3 7/8 | 0-6 | 9-11 | 14-0 | 6-6 | 19-2 | 4-7 | 6-9 | 5-11 |
| 102" | 0-1 1/2 | 2-2 | 2-6 | 0-11 | 5-7 | 16-3 | 6-1 | 10-6 | 7-11 | 18-10 1/4 | 7-8 1/4 | 5-7 7/8 | 0-4 | 10-6 | 14-9 | 6-10 | 20-2 | 4-11 | 7-1 | 6-3 |
| 108" | 0-6 | 2-3 | 2-7 | 1-0 | 5-10 | 17-0 | 6-4 | 11-0 | 8-3 | 19-8 3/8 | 8-0 3/8 | 5-10 7/8 | 0-3 | 11-0 | 15-6 | 7-2 | 21-2 | 5-2 | 7-4 | 6-6 |
| 114" | 0-3 | 2-3 | 2-8 | 1-2 | 6-1 | 17-9 | 6-8 | 11-6 | 8-8 | 20-6 1/8 | 8-5 1/8 | 6-2 1/2 | 0-2 | 11-6 | 16-0 | 7-6 | 21-10 | 5-5 | 7-8 | 6-10 |
| 120" | 0-6 | 2-4 | 2-10 | 1-2 | 6-4 | 18-6 | 6-10 | 12-0 | 9-1 | 21-3 7/8 | 8-7 7/8 | 6-4 1/8 | 0-6 | 11-10 | 16-6 | 7-10 | 22-6 | 5-6 | 7-10 | 7-0 |
| 126" | 0-4 1/2 | 2-6 | 2-10 | 1-3 | 6-7 | 19-3 | 7-3 | 12-6 | 9-5 | 22-1 7/8 | 9-1 7/8 | 6-9 1/8 | 0-4 | 12-6 | 17-3 | 8-2 | 23-6 | 5-11 | 8-5 | 7-8 1/8 |
| 132" | 0-3 | 2-6 | 3-0 | 1-4 | 6-10 | 19-9 | 7-6 | 13-0 | 9-10 | 22-9 | 9-6 | 7-0 1/8 | 0-2 | 13-0 | 18-0 | 8-6 | 24-6 | 6-2 | 8-8 | 7-11 1/8 |
| 138" | 0-6 | 2-7 | 3-1 | 1-5 | 7-1 | 20-6 | 7-10 | 13-6 | 10-2 | 23-6 3/4 | 9-10 3/4 | 7-3 7/8 | 0-6 | 13-6 | 18-6 | 8-10 | 25-2 | 6-5 | 9-0 | 8-3 1/8 |
| 144" | 0-3 | 2-8 | 3-2 | 1-6 | 7-4 | 21-0 | 8-1 | 14-0 | 10-7 | 24-1 1/2 | 10-2 1/2 | 7-6 1/2 | 0-3 | 13-11 | 19-0 | 9-3 | 25-10 | 6-7 | 9-3 | 8-6 1/8 |

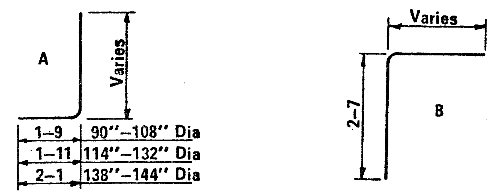


**BENDS**

### QUANTITIES

| Pipe Dia. | Reinf. (lbs) | Conc. (CY) |
|---|---|---|
| 90" | 1305 | 25.47 |
| 96" | 1520 | 27.84 |
| 102" | 1755 | 30.49 |
| 108" | 1950 | 33.10 |
| 114" | 2245 | 35.65 |
| 120" | 2470 | 38.14 |
| 126" | 2895 | 43.91 |
| 132" | 3270 | 46.95 |
| 138" | 3455 | 50.13 |
| 144" | 3900 | 53.09 |

NOTE:

Quantities and steel list shown are for one headwall.

DESIGN K W 9-72 | DRAWN L A M 9-72 | CHECKED R L C 9-72

Registered Professional Engineer (Civil) — Certificate Expires Dec. 31, 19— — Ronald Clancy Brechler — Arizona, U.S.A.

| DESIGN APPROVED | ARIZONA DEPARTMENT OF TRANSPORTATION HIGHWAYS DIVISION STANDARD PLANS | REVISION |
|---|---|---|
| APPROVED FOR DISTRIBUTION | INLET AND OUTLET HEADWALLS 30° SKEW PIPE CULVERT 4:1 SLOPE | STANDARD NO. PH-13 / PLAN NO. B-14.30 |

## STEEL LIST

| Mark | Bend | 90" Dia | | | 96" Dia | | | 102" Dia | | | 108" Dia | | | 114" Dia | | | 120" Dia | | | 126" Dia | | | 132" Dia | | | 138" Dia | | | 144" Dia | | |
|---|---|---|---|---|---|---|---|---|---|---|---|---|---|---|---|---|---|---|---|---|---|---|---|---|---|---|---|---|---|---|---|
| | | No | Size | Lgth | No | Size | Lgth | No | Size | Lgth | No | Size | Lgth | No | Size | Lgth | No | Size | Lgth | No | Size | Lgth | No | Size | Lgth | No | Size | Lgth | No | Size | Lgth |
| a1 | A | 5 | #5 | 10-6 | 4 | #5 | 11-0 | 5 | #6 | 11-3 | 5 | #6 | 11-9 | 5 | #6 | 12-3 | 5 | #7 | 12-9 | 5 | #7 | 13-0 | 5 | #7 | 13-6 | 5 | #8 | 14-0 | 6 | #8 | 14-6 |
| a2 | A | 5 | #5 | 11-0 | 4 | #6 | 11-3 | 4 | #6 | 11-9 | 5 | #6 | 12-3 | 5 | #7 | 12-9 | 5 | #7 | 13-3 | 5 | #7 | 13-6 | 5 | #8 | 14-0 | 5 | #8 | 14-6 | 5 | #8 | 15-0 |
| a3 | A | 5 | #6 | 11-6 | 4 | #6 | 11-9 | 4 | #6 | 12-3 | 4 | #7 | 12-9 | 4 | #7 | 13-3 | 5 | #7 | 13-9 | 5 | #8 | 14-3 | 5 | #8 | 14-6 | 5 | #8 | 15-0 | 5 | #8 | 15-6 |
| a4 | A | 4 | #6 | 12-0 | 4 | #6 | 12-3 | 4 | #7 | 12-6 | 4 | #7 | 13-3 | 4 | #7 | 13-9 | 4 | #8 | 14-3 | 5 | #8 | 14-9 | 5 | #8 | 15-0 | 5 | #8 | 15-6 | 5 | #8 | 16-0 |
| a5 | A | | | | 4 | #7 | 12-9 | 4 | #7 | 13-3 | 3 | #7 | 13-9 | 4 | #8 | 14-3 | 4 | #8 | 14-9 | 4 | #8 | 15-3 | 4 | #8 | 15-6 | 5 | #8 | 16-0 | 5 | #8 | 16-6 |
| a6 | A | | | | | | | | | | | | | | | | | | | | | | | | | | | | | | |
| a7 | A | | | | | | | | | | | | | | | | | | | | | | | | | | | | | | |
| a8 | A | | | | | | | | | | | | | | | | | | | 3 | #4 | 7-0 | 8 | #4 | 8-3 | 14 | #4 | 7-0 | 19 | #4 | 8-3 |
| a9 | A | 4 | #4 | 10-0 | 5 | #4 | 10-6 | 5 | #5 | 10-9 | 5 | #5 | 11-0 | 5 | #5 | 11-9 | 4 | #6 | 12-0 | 5 | #6 | 12-6 | 5 | #7 | 12-9 | 5 | #7 | 13-3 | 5 | #7 | 13-9 |
| a10 | A | 4 | #5 | 10-6 | 4 | #5 | 11-0 | 5 | #5 | 11-6 | 5 | #6 | 11-9 | 5 | #6 | 12-6 | 4 | #6 | 12-6 | 4 | #7 | 13-0 | 4 | #7 | 13-6 | 5 | #7 | 14-3 | 5 | #7 | 14-6 |
| a11 | A | 4 | #5 | 11-3 | 4 | #6 | 11-9 | 4 | #6 | 12-3 | 4 | #7 | 12-9 | 5 | #7 | 13-3 | 4 | #7 | 13-3 | 4 | #7 | 13-9 | 4 | #7 | 14-3 | 4 | #8 | 15-0 | 5 | #8 | 15-3 |
| a12 | A | 4 | #6 | 12-0 | 4 | #7 | 12-6 | 3 | #7 | 13-0 | 4 | #7 | 13-3 | 4 | #7 | 14-0 | 4 | #7 | 14-0 | 4 | #8 | 14-6 | 4 | #8 | 15-0 | 4 | #8 | 15-6 | 4 | #8 | 16-0 |
| a13 | A | | | | | | | | | | | | | | | | 4 | #8 | 14-6 | 3 | #8 | 15-0 | 4 | #8 | 15-6 | 4 | #8 | 16-3 | 4 | #8 | 16-9 |
| a14 | A | | | | | | | | | | | | | | | | | | | | | | | | | 3 | #4 | 8-0 | 7 | #4 | 8-9 |
| b1 | str | 2 | #4 | 18-6 | 2 | #4 | 19-3 | 2 | #4 | 20-0 | 2 | #4 | 20-9 | 2 | #4 | 21-6 | 2 | #4 | 22-3 | 2 | #4 | 23-0 | 2 | #4 | 23-9 | 2 | #4 | 24-6 | 2 | #4 | 25-3 |
| b2 | str | 10 | #4 | 18-3 | 12 | #4 | 19-0 | 12 | #4 | 19-9 | 12 | #4 | 20-6 | 12 | #4 | 21-3 | 14 | #4 | 22-0 | 14 | #4 | 22-9 | 14 | #4 | 23-6 | 16 | #4 | 24-3 | 16 | #4 | 25-0 |
| b3 | str | 2 | #4 | 15-0 | 2 | #4 | 5-9 | 2 | #4 | 9-9 | 2 | #4 | 15-0 | 2 | #4 | 19-6 | 2 | #4 | 10-0 | 2 | #4 | 14-6 | 2 | #4 | 19-9 | 2 | #4 | 10-0 | 2 | #4 | 15-0 |
| b4 | str | | | | | | | | | | | | | 2 | #4 | 5-9 | | | | | | | 2 | #4 | 5-9 | | | | | | |
| b5 | str | | | | | | | | | | | | | | | | | | | | | | | | | | | | | | |
| b6 | str | | | | | | | | | | | | | | | | | | | | | | | | | | | | | | |
| b7 | str | 2 | #4 | 15-3 | 2 | #4 | 16-0 | 2 | #4 | 16-9 | 2 | #4 | 17-6 | 2 | #4 | 18-3 | 2 | #4 | 19-0 | 2 | #4 | 19-9 | 2 | #4 | 20-6 | 2 | #4 | 21-3 | 2 | #4 | 22-0 |
| b8 | str | 10 | #4 | 15-0 | 10 | #4 | 15-9 | 10 | #4 | 16-6 | 12 | #4 | 17-3 | 12 | #4 | 18-0 | 12 | #4 | 18-9 | 14 | #4 | 19-6 | 14 | #4 | 20-3 | 14 | #4 | 21-0 | 14 | #4 | 21-9 |
| b9 | str | 2 | #4 | 10-0 | 2 | #4 | 13-0 | 2 | #4 | 15-9 | 2 | #4 | 9-9 | 2 | #4 | 12-9 | 2 | #4 | 16-0 | 2 | #4 | 10-0 | 2 | #4 | 12-9 | 2 | #4 | 15-9 | 2 | #4 | 19-0 |
| b10 | str | | | | 2 | #4 | 3-9 | 2 | #4 | 6-9 | | | | 2 | #4 | 4-0 | 2 | #4 | 7-0 | | | | 2 | #4 | 3-6 | 2 | #4 | 6-9 | 2 | #4 | 9-9 |
| b11 | str | | | | | | | | | | | | | | | | | | | | | | | | | | | | | | |
| b12 | str | | | | | | | | | | | | | | | | | | | | | | | | | | | | | | |
| c | str | 5 | #4 | 10-6 | 5 | #4 | 11-0 | 5 | #4 | 11-6 | 5 | #4 | 12-0 | 5 | #4 | 12-6 | 5 | #4 | 13-0 | 5 | #4 | 13-6 | 5 | #4 | 14-0 | 5 | #4 | 14-6 | 5 | #4 | 15-0 |
| d | A | 6 | #6 | 12-3 | 6 | #6 | 12-9 | 6 | #7 | 13-3 | 6 | #7 | 13-9 | 6 | #7 | 14-6 | 6 | #7 | 15-0 | 6 | #7 | 15-6 | 6 | #7 | 16-0 | 6 | #7 | 16-6 | 6 | #7 | 17-0 |
| e1 | str | 5 | #4 | 3-3 | 4 | #4 | 3-6 | 5 | #4 | 3-9 | 5 | #4 | 4-0 | 5 | #4 | 4-3 | 5 | #5 | 4-3 | 5 | #5 | 4-6 | 5 | #5 | 4-6 | 5 | #6 | 4-9 | 6 | #6 | 5-0 |
| e2 | str | 5 | #4 | 3-6 | 4 | #4 | 3-9 | 4 | #4 | 4-0 | 5 | #4 | 4-3 | 5 | #5 | 4-6 | 5 | #5 | 4-6 | 5 | #5 | 4-9 | 5 | #6 | 4-9 | 5 | #6 | 5-3 | 5 | #6 | 5-6 |
| e3 | str | 5 | #4 | 3-9 | 4 | #4 | 4-0 | 4 | #4 | 4-3 | 4 | #5 | 4-6 | 4 | #5 | 4-9 | 5 | #5 | 4-9 | 5 | #6 | 5-0 | 5 | #6 | 5-0 | 5 | #6 | 5-6 | 5 | #7 | 5-9 |
| e4 | str | 4 | #4 | 4-0 | 4 | #4 | 4-3 | 4 | #5 | 4-6 | 4 | #5 | 4-9 | 4 | #5 | 5-0 | 4 | #6 | 5-3 | 5 | #6 | 5-6 | 5 | #7 | 5-6 | 5 | #7 | 6-0 | 5 | #7 | 6-3 |
| e5 | str | | | | 4 | #5 | 4-6 | 4 | #5 | 4-9 | 4 | #5 | 5-0 | 4 | #6 | 5-3 | 4 | #6 | 5-6 | 4 | #7 | 5-9 | 5 | #7 | 6-0 | 5 | #7 | 6-3 | 5 | #8 | 6-6 |
| e6 | str | | | | | | | | | | | | | | | | | | | | | | | | | | | | | | |
| e7 | str | | | | | | | | | | | | | | | | | | | | | | | | | | | | | | |
| e8 | str | 2 | #4 | 4-3 | 2 | #5 | 4-6 | 2 | #5 | 4-9 | 2 | #5 | 5-0 | 2 | #6 | 5-3 | 2 | #6 | 5-6 | 2 | #7 | 5-9 | 2 | #7 | 6-0 | 2 | #7 | 6-3 | 2 | #8 | 6-6 |
| e9 | str | 11 | #4 | 4-3 | 12 | #5 | 4-6 | 12 | #5 | 4-9 | 13 | #5 | 5-0 | 13 | #6 | 5-3 | 14 | #6 | 5-6 | 14 | #7 | 5-9 | 15 | #7 | 6-0 | 16 | #7 | 6-3 | 16 | #8 | 6-6 |
| e10 | str | 3 | #4 | 4-3 | 3 | #5 | 4-6 | 3 | #5 | 4-9 | 3 | #5 | 5-0 | 4 | #6 | 5-3 | 4 | #6 | 5-6 | 4 | #7 | 5-9 | 4 | #7 | 6-0 | 4 | #7 | 6-3 | 4 | #8 | 6-6 |
| e11 | str | 4 | #4 | 4-0 | 4 | #5 | 4-3 | 4 | #5 | 4-6 | 4 | #5 | 4-9 | 4 | #6 | 5-0 | 4 | #6 | 5-3 | 4 | #6 | 5-6 | 4 | #7 | 5-9 | 4 | #7 | 6-0 | 4 | #8 | 6-3 |
| e12 | str | 4 | #4 | 3-9 | 4 | #5 | 4-0 | 4 | #5 | 4-3 | 4 | #5 | 4-6 | 5 | #5 | 4-9 | 4 | #6 | 5-0 | 4 | #6 | 5-3 | 4 | #6 | 5-6 | 4 | #7 | 5-9 | 4 | #7 | 6-0 |
| e13 | str | 4 | #4 | 3-6 | 4 | #4 | 3-9 | 5 | #4 | 4-0 | 5 | #4 | 4-3 | 5 | #5 | 4-6 | 4 | #5 | 4-9 | 4 | #6 | 5-0 | 4 | #6 | 5-3 | 4 | #6 | 5-6 | 5 | #7 | 5-9 |
| e14 | str | 4 | #4 | 3-3 | 5 | #4 | 3-6 | 5 | #4 | 3-9 | 5 | #4 | 4-0 | 5 | #4 | 4-3 | 4 | #5 | 4-6 | 4 | #5 | 4-9 | 4 | #5 | 4-9 | 5 | #6 | 5-0 | 5 | #6 | 5-3 |
| e15 | str | | | | | | | | | | | | | | | | 4 | #5 | 4-3 | 5 | #5 | 4-6 | 5 | #5 | 4-6 | 5 | #6 | 4-9 | 5 | #6 | 5-0 |
| f1 | str | 4 | #4 | 8-9 | 4 | #4 | 9-3 | 4 | #4 | 9-6 | 4 | #4 | 10-0 | 4 | #4 | 10-6 | 4 | #4 | 10-9 | 4 | #4 | 11-3 | 5 | #4 | 11-9 | 5 | #4 | 12-0 | 5 | #4 | 12-6 |
| f2 | str | 3 | #4 | 9-3 | 4 | #4 | 9-9 | 4 | #4 | 10-0 | 4 | #4 | 10-6 | 4 | #4 | 11-0 | 4 | #4 | 11-3 | 4 | #4 | 11-9 | 4 | #4 | 12-3 | 4 | #4 | 12-9 | 5 | #4 | 13-3 |
| f3 | str | 3 | #4 | 9-9 | 3 | #4 | 10-3 | 3 | #4 | 10-9 | 4 | #4 | 11-0 | 4 | #4 | 11-6 | 4 | #4 | 12-0 | 4 | #4 | 12-6 | 4 | #4 | 13-0 | 4 | #4 | 13-6 | 4 | #4 | 14-0 |
| f4 | str | 3 | #4 | 10-3 | 3 | #4 | 10-9 | 3 | #4 | 11-3 | 3 | #4 | 11-9 | 3 | #4 | 12-3 | 4 | #4 | 12-6 | 4 | #4 | 13-0 | 4 | #4 | 13-9 | 4 | #4 | 14-0 | 4 | #4 | 14-6 |
| f5 | str | 4 | #4 | 8-3 | 4 | #4 | 8-6 | 4 | #4 | 9-0 | 4 | #4 | 9-3 | 4 | #4 | 9-9 | 4 | #4 | 10-3 | 4 | #4 | 10-6 | 4 | #4 | 10-9 | 4 | #4 | 11-3 | 4 | #4 | 11-9 |
| f6 | str | 4 | #4 | 9-3 | 4 | #4 | 9-6 | 4 | #4 | 9-9 | 4 | #4 | 10-3 | 3 | #4 | 10-6 | 3 | #4 | 11-0 | 4 | #4 | 11-6 | 4 | #4 | 11-9 | 4 | #4 | 12-3 | 4 | #4 | 12-6 |
| f7 | str | 3 | #4 | 10-3 | 3 | #4 | 10-6 | 4 | #4 | 10-9 | 4 | #4 | 11-3 | 3 | #4 | 11-3 | 3 | #4 | 12-0 | 3 | #4 | 12-6 | 3 | #4 | 12-9 | 4 | #4 | 13-3 | 4 | #4 | 13-6 |
| f8 | str | | | | | | | | | | | | | 3 | #4 | 12-6 | 3 | #4 | 12-3 | 3 | #4 | 13-3 | 3 | #4 | 13-6 | 3 | #4 | 14-3 | 3 | #4 | 14-6 |
| m1 | str | 3 | #4 | 20-6 | 3 | #4 | 21-6 | 3 | #4 | 22-3 | 3 | #4 | 23-0 | 4 | #4 | 24-0 | 4 | #4 | 25-9 | 4 | #4 | 26-6 | 4 | #4 | 27-3 | 4 | #4 | 28-3 | 4 | #4 | 29-0 |
| m2 | str | 1 | #4 | 20-6 | 1 | #4 | 21-6 | 1 | #4 | 22-3 | 1 | #4 | 23-0 | 1 | #4 | 24-0 | 1 | #4 | 25-9 | 1 | #4 | 26-6 | 1 | #4 | 27-3 | 1 | #4 | 28-3 | 1 | #4 | 29-0 |
| m3 | str | 3 | #4 | 19-6 | 3 | #4 | 20-6 | 3 | #4 | 21-6 | 3 | #4 | 22-6 | 4 | #4 | 23-3 | 4 | #4 | 24-3 | 4 | #4 | 25-3 | 4 | #4 | 26-3 | 4 | #4 | 27-3 | 4 | #4 | 28-3 |
| m4 | str | 1 | #4 | 19-6 | 1 | #4 | 20-6 | 1 | #4 | 21-6 | 1 | #4 | 22-6 | 1 | #4 | 23-3 | 1 | #4 | 24-3 | 1 | #4 | 25-3 | 1 | #4 | 26-3 | 1 | #4 | 27-3 | 1 | #4 | 28-3 |
| n1 | str | 3 | #4 | 15-9 | 3 | #4 | 16-9 | 3 | #4 | 17-6 | 3 | #4 | 18-6 | 4 | #4 | 19-6 | 4 | #4 | 20-3 | 4 | #4 | 21-0 | 4 | #4 | 21-9 | 4 | #4 | 22-9 | 4 | #4 | 23-6 |
| n2 | str | 1 | #4 | 15-9 | 1 | #4 | 16-9 | 1 | #4 | 17-6 | 1 | #4 | 18-6 | 1 | #4 | 19-6 | 1 | #4 | 20-3 | 1 | #4 | 21-0 | 1 | #4 | 21-9 | 1 | #4 | 22-9 | 1 | #4 | 23-6 |
| p | str | 4 | #5 | 11-9 | 4 | #5 | 12-6 | 4 | #5 | 13-0 | 4 | #5 | 13-6 | 4 | #5 | 14-3 | 4 | #5 | 14-6 | 4 | #5 | 15-6 | 4 | #5 | 16-0 | 4 | #5 | 16-6 | 4 | #5 | 17-0 |
| q | str | 2 | #6 | 13-9 | 2 | #6 | 14-6 | 2 | #6 | 15-0 | 2 | #6 | 15-6 | 2 | #6 | 16-3 | 2 | #6 | 16-6 | 2 | #6 | 17-6 | 2 | #6 | 18-0 | 2 | #6 | 18-6 | 2 | #6 | 19-0 |
| g | str | 2 | #4 | 9-9 | 2 | #4 | 10-3 | 2 | #4 | 10-9 | 2 | #4 | 11-6 | 2 | #4 | 12-0 | 2 | #4 | 12-6 | 2 | #4 | 13-0 | 2 | #4 | 13 6 | 2 | #4 | 14-0 | 2 | #4 | 14-6 |
| u | B | 7 | #4 | 4-6 | 8 | #4 | 4-6 | 8 | #4 | 4-6 | 8 | #4 | 4-9 | 9 | #4 | 4-9 | 9 | #4 | 4-9 | 9 | #4 | 4-9 | 10 | #4 | 5-0 | 10 | #4 | 5-0 | 10 | #4 | 5-0 |
| v | str | 1 | #4 | 18-6 | 1 | #4 | 19-9 | 1 | #4 | 20-3 | 1 | #4 | 21-3 | 1 | #4 | 22-0 | 1 | #4 | 22-6 | 1 | #4 | 23-3 | 1 | #4 | 24-9 | 1 | #4 | 24-9 | 1 | #4 | 25-6 |
| w | str | 1 | #4 | 15-0 | 1 | #4 | 15-9 | 1 | #4 | 16-3 | 1 | #4 | 17-3 | 1 | #4 | 17-9 | 1 | #4 | 18-6 | 1 | #4 | 19-3 | 1 | #4 | 20-9 | 1 | #4 | 20-9 | 1 | #4 | 21-6 |

| Pipe Dia | DIMENSIONS | | | | | | | | | | | | | | | | | | | |
|---|---|---|---|---|---|---|---|---|---|---|---|---|---|---|---|---|---|---|---|---|
| | A | B | C | D | E | F | G | H | J | K | L | M | N | P | R | S | T | V | W | X |
| 90" | 0-3 | 2-1 | 2-4 | 0-8 | 5-1 | 18-3 | 5-6 | 9-6 | 7-6 | 20-8 1/2 | 6-11 1/2 | 5-1 1/4 | 0-4 | 9-6 | 15-0 | 7-0 | 20-0 | 4-5 | 6-6 | 5-8 |
| 96" | 0-1 1/2 | 2-2 | 2-6 | 0-8 | 5-4 | 19-0 | 5-9 | 10-0 | 8-0 | 21-6 1/4 | 7-3 1/4 | 5-3 7/8 | 0-3 | 9-11 | 15-9 | 7-5 | 20-11 | 4-7 | 6-9 | 5-11 |
| 102" | 0-6 | 2-3 | 2-8 | 0-8 | 5-7 | 19-9 | 6-1 | 10-6 | 8-4 | 22-3 7/8 | 7-7 7/8 | 5-7 1/2 | 0-2 | 10-5 | 16-6 | 7-9 | 21-10 | 4-10 | 7-1 | 6-3 |
| 108" | 0-4 1/2 | 2-2 | 2-10 | 0-10 | 5-10 | 20-6 | 6-4 | 11-0 | 8-10 | 23-2 3/8 | 8-0 3/8 | 5-10 7/8 | 0-6 | 11-0 | 17-3 | 8-1 | 22-11 | 5-2 | 7-4 | 6-6 |
| 114" | 0-3 | 2-3 | 3-0 | 0-10 | 6-1 | 21-3 | 6-8 | 11-6 | 9-3 | 24-0 1/8 | 8-5 1/8 | 6-2 1/2 | 0-4 | 11-6 | 18-0 | 8-6 | 23-10 | 5-5 | 7-8 | 6-10 |
| 120" | 0-1 1/2 | 2-4 | 3-0 | 1-0 | 6-4 | 22-0 | 6-11 | 12-0 | 9-8 | 24-9 7/8 | 8-8 7/8 | 6-5 1/8 | 0-3 | 11-11 | 18-9 | 8-11 | 24-9 | 5-7 | 7-11 | 7-1 |
| 126" | 0-6 | 2-7 | 3-0 | 1-0 | 6-7 | 22-9 | 7-3 | 12-6 | 10-0 | 25-7 5/8 | 9-1 5/8 | 6-8 3/4 | 0-2 | 12-5 | 19-6 | 9-3 | 25-8 | 5-10 | 8-5 | 7-8 1/8 |
| 132" | 0-4 1/2 | 2-8 | 3-2 | 1-0 | 6-10 | 23-6 | 7-6 | 13-0 | 10-6 | 26-5 1/4 | 9-5 1/4 | 6-11 1/2 | 0-6 | 12-10 | 20-3 | 9-7 | 26-7 | 6-0 | 8-8 | 7-11 1/8 |
| 138" | 0-3 | 2-8 | 3-5 | 1-0 | 7-1 | 24-3 | 7-10 | 13-6 | 10-11 | 27-3 3/8 | 9-10 3/8 | 7-3 1/2 | 0-4 | 13-5 | 21-0 | 10-0 | 27-7 | 6-4 | 9-0 | 8-3 1/8 |
| 144" | 0-1 1/2 | 2-8 | 3-8 | 1-0 | 7-4 | 25-0 | 8-1 | 14-0 | 11-4 | 28-1 1/2 | 10-2 1/2 | 7-6 1/2 | 0-3 | 13-11 | 21-9 | 10-5 | 28-7 | 6-7 | 9-3 | 8-6 1/8 |

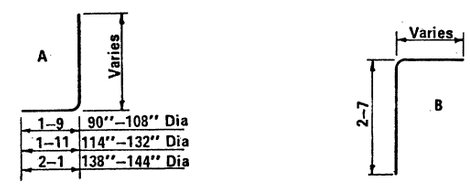


BENDS

### QUANTITIES

| Pipe Dia. | Reinf. (lbs) | Conc. (CY) |
|---|---|---|
| 90" | 1430 | 28.92 |
| 96" | 1780 | 31.55 |
| 102" | 1995 | 34.33 |
| 108" | 2220 | 37.18 |
| 114" | 2615 | 40.26 |
| 120" | 2985 | 43.12 |
| 126" | 3370 | 49.49 |
| 132" | 3720 | 52.99 |
| 138" | 4150 | 56.89 |
| 144" | 4600 | 60.74 |

NOTE:
Quantities and steel list shown are for one headwall.

Registered Professional Engineer (Civil) CERTIFICATE EXPIRES DEC. 31, 19 RONALD C. BUCHLER ARIZONA, U.S.A.

| | | |
|---|---|---|
| DESIGN APPROVED RC Buchler | ARIZONA DEPARTMENT OF TRANSPORTATION HIGHWAYS DIVISION STANDARD PLANS | REVISION |
| APPROVED FOR DISTRIBUTION | INLET AND OUTLET HEADWALLS 30° SKEW PIPE CULVERT 6:1 SLOPE | STANDARD NO. PH-14 / PLAN NO. 8-14.40 |

| DESIGN | K.W. | 9-72 | DRAWN | LAM | 9-72 | CHECKED | RLC | 9-72 |
|---|---|---|---|---|---|---|---|---|

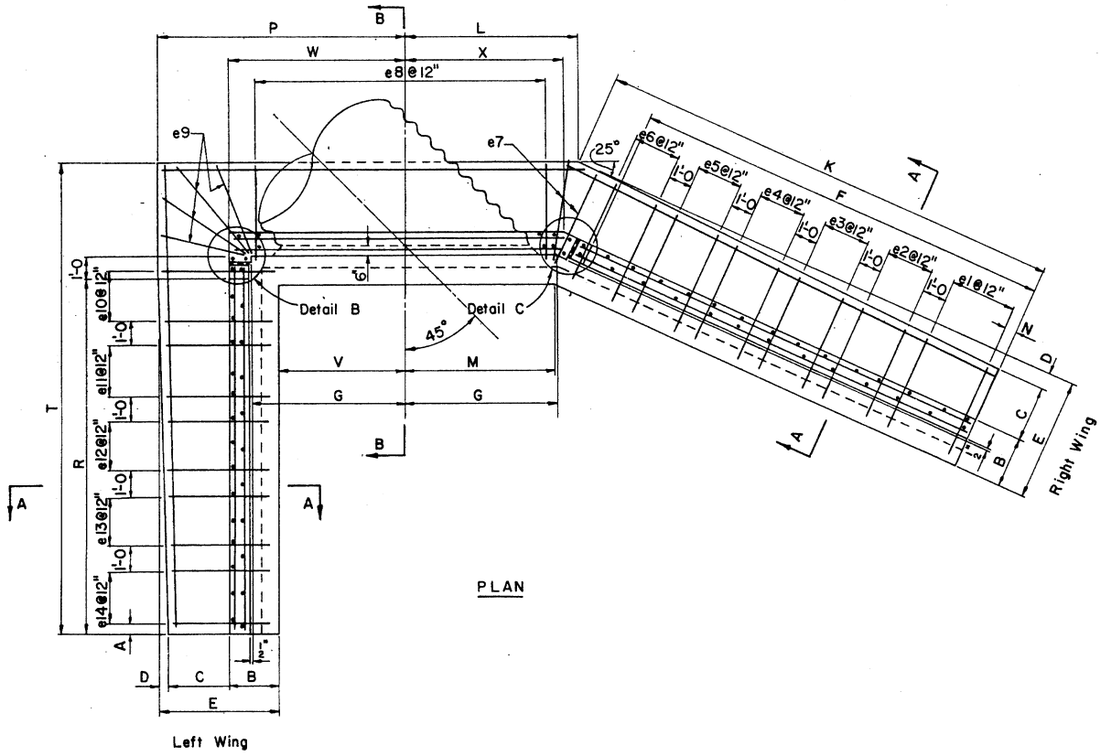


PLAN

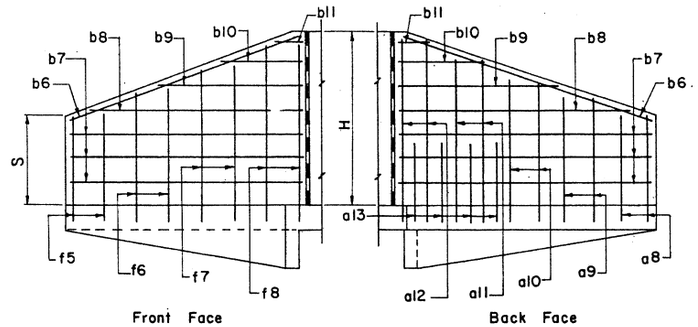


LEFT WING ELEVATION

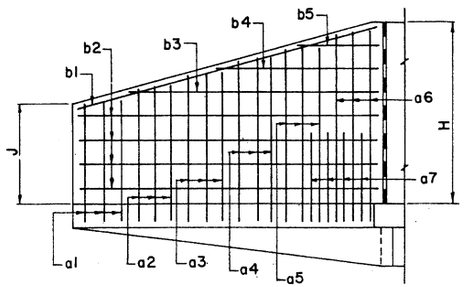


RIGHT WING ELEVATION

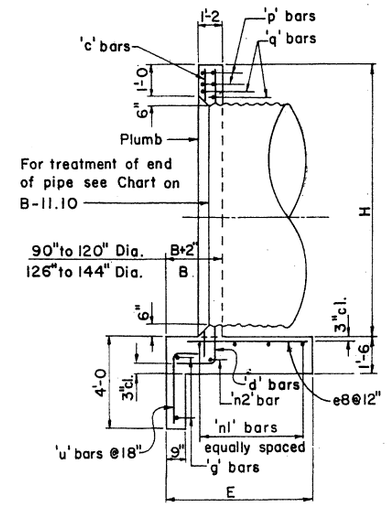


SECTION B-B

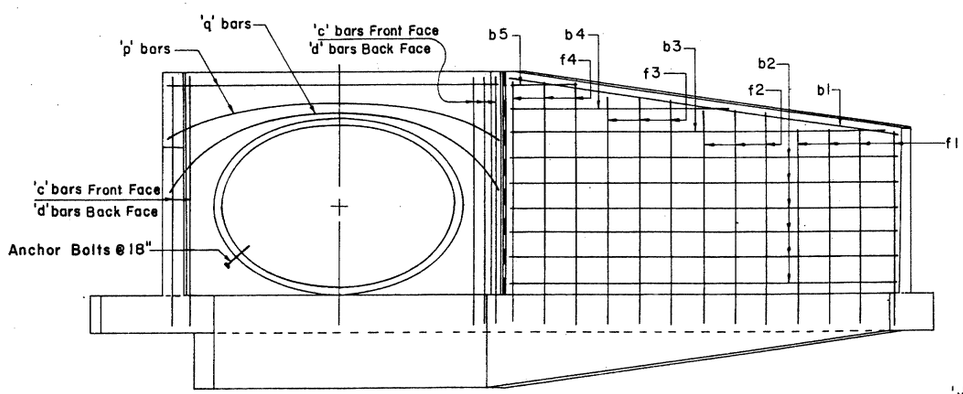


ELEVATION

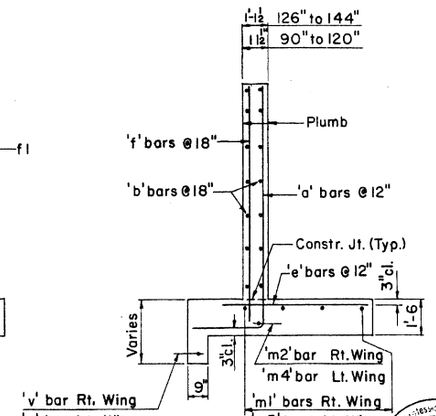


SECTION A-A

Notes: For General Notes and Misc. Details see B-11.10.
For steel list and bend diagrams see B-15.20, B-15.30 or B-15.40.

| DESIGN | K.W. | 9-72 | NO. | DESCRIPTION OF REVISIONS | MADE BY | DATE |
|---|---|---|---|---|---|---|
| DRAWN | G.H. | 9-72 | 1 | Revised ℄ of pipe. | WSK:sed | 2-11-75 |
| CHECKED | R.L.C. | 9-72 | 2 | Wall Thicknesses | G.H. | 7-14-76 |
| | | | 3 | | | |

| DESIGN APPROVED | ARIZONA DEPARTMENT OF TRANSPORTATION HIGHWAYS DIVISION STANDARD PLANS | REVISION |
|---|---|---|
| APPROVED FOR DISTRIBUTION | INLET & OUTLET HEADWALLS 45° SKEW PIPE CULVERT | STANDARD NO. PH-15 |
| | | PLAN NO. B-15.10 |

## STEEL LIST

| Mark | Bend | 90" Dia | | | 96" Dia | | | 102" Dia | | | 108" Dia | | | 114" Dia | | | 120" Dia | | | 126" Dia | | | 132" Dia | | | 138" Dia | | | 144" Dia | | |
|---|---|---|---|---|---|---|---|---|---|---|---|---|---|---|---|---|---|---|---|---|---|---|---|---|---|---|---|---|---|---|---|
| | | No | Size | Lgth | No | Size | Lgth | No | Size | Lgth | No | Size | Lgth | No | Size | Lgth | No | Size | Lgth | No | Size | Lgth | No | Size | Lgth | No | Size | Lgth | No | Size | Lgth |
| a1 | A | 4 | #4 | 9-3 | 4 | #5 | 9-6 | 4 | #5 | 9-9 | 4 | #5 | 10-3 | 4 | #5 | 10-9 | 4 | #6 | 11-0 | 4 | #6 | 11-3 | 4 | #7 | 11-9 | 4 | #7 | 12-0 | 4 | #7 | 12-3 |
| a2 | A | 4 | #5 | 10-0 | 4 | #5 | 10-3 | 4 | #6 | 10-6 | 4 | #6 | 11-0 | 4 | #6 | 11-6 | 4 | #7 | 11-9 | 4 | #7 | 12-0 | 4 | #7 | 12-6 | 4 | #8 | 13-0 | 4 | #8 | 13-3 |
| a3 | A | 4 | #6 | 10-9 | 3 | #6 | 11-0 | 4 | #7 | 11-6 | 4 | #7 | 11-9 | 4 | #7 | 12-3 | 4 | #7 | 12-9 | 4 | #7 | 13-0 | 4 | #8 | 13-3 | 4 | #8 | 13-9 | 4 | #8 | 14-0 |
| a4 | A | 4 | #7 | 11-3 | 3 | #7 | 11-9 | 3 | #7 | 12-3 | 4 | #7 | 12-6 | 4 | #7 | 13-0 | 3 | #7 | 13-6 | 4 | #7 | 13-9 | 4 | #8 | 14-3 | 4 | #8 | 14-9 | 4 | #8 | 15-0 |
| a5 | A | | | | 3 | #7 | 12-6 | 3 | #7 | 13-0 | 3 | #7 | 13-6 | 4 | #7 | 13-9 | 3 | #7 | 14-0 | 3 | #7 | 14-6 | 3 | #8 | 15-0 | 4 | #8 | 15-6 | 4 | #8 | 15-9 |
| a6 | A | | | | | | | | | | | | | | | | 2 | #7 | 14-6 | 2 | #7 | 15-3 | 3 | #8 | 15-6 | 3 | #8 | 16-3 | 4 | #8 | 16-9 |
| a7 | A | | | | | | | | | | 3 | #4 | 6-0 | 7 | #5 | 6-0 | 11 | #5 | 6-0 | 12 | #6 | 6-0 | 9 | #5 | 7-0 | 10 | #5 | 7-0 | 15 | #6 | 7-0 |
| a8 | A | 3 | #4 | 7-9 | 3 | #4 | 8-0 | 3 | #4 | 8-3 | 3 | #4 | 8-6 | 3 | #4 | 9-0 | 3 | #4 | 9-3 | 3 | #4 | 9-6 | 3 | #5 | 9-9 | 3 | #5 | 10-0 | 3 | #5 | 10-3 |
| a9 | A | 3 | #5 | 9-3 | 3 | #5 | 9-6 | 3 | #5 | 9-9 | 3 | #5 | 10-0 | 3 | #5 | 10-6 | 3 | #6 | 10-9 | 3 | #6 | 11-0 | 3 | #6 | 11-3 | 3 | #6 | 11-6 | 3 | #6 | 11-9 |
| a10 | A | 2 | #6 | 10-9 | 3 | #6 | 11-0 | 3 | #6 | 11-3 | 3 | #6 | 11-6 | 2 | #6 | 12-0 | 3 | #7 | 12-3 | 3 | #7 | 12-6 | 3 | #7 | 12-9 | 3 | #7 | 13-0 | 3 | #8 | 13-3 |
| a11 | A | 2 | #6 | 11-6 | 2 | #7 | 12-6 | 2 | #7 | 12-9 | 3 | #7 | 13-0 | 2 | #7 | 13-3 | 2 | #7 | 13-6 | 2 | #7 | 13-9 | 3 | #8 | 14-3 | 3 | #8 | 14-9 | 3 | #8 | 14-9 |
| a12 | A | | | | | | | | | | | | | 2 | #7 | 14-3 | 2 | #7 | 14-9 | 2 | #7 | 15-3 | 2 | #8 | 15-9 | 2 | #8 | 16-0 | 3 | #8 | 16-3 |
| a13 | A | | | | | | | | | | | | | 3 | #4 | 6-0 | 4 | #4 | 6-0 | 4 | #4 | 6-0 | 4 | #4 | 7-0 | 4 | #4 | 7-0 | 8 | #4 | 7-0 |
| b1 | str | 2 | #4 | 15-9 | 2 | #4 | 16-9 | 2 | #4 | 17-6 | 2 | #4 | 18-3 | 2 | #4 | 19-3 | 2 | #4 | 20-0 | 2 | #4 | 20-9 | 2 | #4 | 21-9 | 2 | #4 | 22-6 | 2 | #4 | 23-3 |
| b2 | str | 8 | #4 | 15-6 | 10 | #4 | 16-6 | 10 | #4 | 17-3 | 10 | #4 | 18-0 | 10 | #4 | 19-0 | 12 | #4 | 19-9 | 12 | #4 | 20-6 | 12 | #4 | 21-6 | 12 | #4 | 22-3 | 12 | #4 | 23-0 |
| b3 | str | 2 | #4 | 15-3 | 2 | #4 | 10-0 | 2 | #4 | 12-3 | 2 | #4 | 15-3 | 2 | #4 | 17-3 | 2 | #4 | 12-9 | 2 | #4 | 14-6 | 2 | #4 | 17-6 | 2 | #4 | 20-0 | 2 | #4 | 22-0 |
| b4 | str | 2 | #4 | 8-3 | 2 | #4 | 3-3 | 2 | #4 | 5-3 | 2 | #4 | 8-0 | 2 | #4 | 10-3 | 2 | #4 | 5-6 | 2 | #4 | 7-9 | 2 | #4 | 10-3 | 2 | #4 | 12-9 | 2 | #4 | 15-0 |
| b5 | str | | | | | | | | | | | | | 2 | #4 | 3-0 | | | | | | | 2 | #4 | 3-0 | 2 | #4 | 5-6 | 2 | #4 | 8-0 |
| b6 | str | 2 | #4 | 10-3 | 2 | #4 | 10-9 | 2 | #4 | 11-3 | 2 | #4 | 11-9 | 2 | #4 | 12-3 | 2 | #4 | 12-9 | 2 | #4 | 13-3 | 2 | #4 | 14-0 | 2 | #4 | 14-6 | 2 | #4 | 15-0 |
| b7 | str | 8 | #4 | 9-6 | 8 | #4 | 10-0 | 8 | #4 | 10-6 | 8 | #4 | 11-0 | 8 | #4 | 11-6 | 8 | #4 | 12-0 | 10 | #4 | 12-6 | 10 | #4 | 13-0 | 10 | #4 | 13-6 | 10 | #4 | 14-0 |
| b8 | str | 2 | #4 | 6-6 | 2 | #4 | 7-6 | 2 | #4 | 8-6 | 2 | #4 | 9-6 | 2 | #4 | 10-6 | 2 | #4 | 11-6 | 2 | #4 | 9-6 | 2 | #4 | 10-6 | 2 | #4 | 11-3 | 2 | #4 | 12-3 |
| b9 | str | 2 | #4 | 3-6 | 2 | #4 | 4-6 | 2 | #4 | 5-6 | 2 | #4 | 6-6 | 2 | #4 | 7-6 | 2 | #4 | 8-6 | 2 | #4 | 6-6 | 2 | #4 | 7-6 | 2 | #4 | 8-3 | 2 | #4 | 9-3 |
| b10 | str | | | | 2 | #4 | 1-6 | 2 | #4 | 2-6 | 2 | #4 | 3-6 | 2 | #4 | 4-6 | 2 | #4 | 5-6 | 2 | #4 | 3-3 | 2 | #4 | 4-6 | 2 | #4 | 5-3 | 2 | #4 | 6-6 |
| b11 | str | | | | | | | | | | | | | 2 | #4 | 1-6 | 2 | #4 | 2-6 | | | | 2 | #4 | 1-3 | 2 | #4 | 2-3 | 2 | #4 | 3-3 |
| c | str | 5 | #4 | 10-6 | 5 | #4 | 11-0 | 5 | #4 | 11-6 | 5 | #4 | 12-0 | 5 | #4 | 12-6 | 5 | #4 | 13-0 | 5 | #4 | 13-6 | 5 | #4 | 14-0 | 5 | #4 | 14-6 | 5 | #4 | 15-0 |
| d | A | 6 | #6 | 12-3 | 6 | #6 | 12-9 | 6 | #7 | 13-3 | 6 | #7 | 13-9 | 6 | #7 | 14-6 | 6 | #7 | 15-0 | 6 | #7 | 15-6 | 6 | #7 | 16-0 | 6 | #7 | 16-6 | 6 | #7 | 17-0 |
| e1 | str | 4 | #4 | 3-0 | 4 | #4 | 3-0 | 4 | #4 | 3-3 | 4 | #4 | 3-3 | 4 | #4 | 3-6 | 4 | #4 | 3-6 | 4 | #4 | 3-6 | 4 | #4 | 3-9 | 4 | #4 | 3-9 | 4 | #5 | 4-0 |
| e2 | str | 4 | #4 | 3-3 | 4 | #4 | 3-3 | 4 | #4 | 3-6 | 4 | #4 | 3-6 | 4 | #4 | 3-9 | 4 | #4 | 3-9 | 4 | #4 | 4-0 | 4 | #5 | 4-0 | 4 | #5 | 4-0 | 4 | #5 | 4-6 |
| e3 | str | 3 | #4 | 3-6 | 3 | #4 | 3-9 | 4 | #4 | 3-9 | 4 | #5 | 4-0 | 4 | #5 | 4-0 | 4 | #5 | 4-3 | 4 | #5 | 4-3 | 4 | #5 | 4-6 | 4 | #6 | 4-6 | 4 | #6 | 4-9 |
| e4 | str | 3 | #4 | 3-9 | 3 | #4 | 4-0 | 3 | #5 | 4-3 | 4 | #5 | 4-6 | 4 | #5 | 4-3 | 3 | #5 | 4-6 | 4 | #6 | 4-6 | 4 | #6 | 5-0 | 4 | #6 | 5-0 | 4 | #7 | 5-0 |
| e5 | str | 3 | #4 | 4-0 | 3 | #5 | 4-3 | 3 | #5 | 4-6 | 3 | #5 | 4-9 | 4 | #6 | 4-9 | 3 | #6 | 4-9 | 3 | #6 | 5-0 | 3 | #7 | 5-3 | 4 | #7 | 5-6 | 4 | #7 | 5-6 |
| e6 | str | | | | | | | | | | | | | | | | 3 | #6 | 5-0 | 3 | #7 | 5-6 | 3 | #7 | 5-6 | 3 | #7 | 5-9 | 4 | #8 | 6-0 |
| e7 | str | 2 | #4 | 4-3 | 2 | #5 | 4-6 | 2 | #5 | 4-9 | 2 | #5 | 5-0 | 2 | #6 | 5-3 | 2 | #6 | 5-6 | 2 | #7 | 5-9 | 2 | #7 | 6-0 | 2 | #7 | 6-3 | 2 | #8 | 6-6 |
| e8 | str | 14 | #4 | 4-3 | 14 | #5 | 4-6 | 15 | #5 | 4-9 | 15 | #5 | 5-0 | 16 | #6 | 5-3 | 16 | #6 | 5-6 | 17 | #7 | 5-9 | 17 | #7 | 6-0 | 18 | #7 | 6-3 | 19 | #8 | 6-6 |
| e9 | str | 4 | #4 | 4-3 | 4 | #5 | 4-6 | 4 | #5 | 4-9 | 4 | #5 | 5-0 | 4 | #6 | 5-3 | 4 | #6 | 5-6 | 4 | #7 | 5-9 | 4 | #7 | 6-0 | 4 | #7 | 6-3 | 4 | #8 | 6-6 |
| e10 | str | 2 | #4 | 4-3 | 2 | #5 | 4-6 | 3 | #5 | 4-9 | 3 | #5 | 4-9 | 2 | #6 | 5-3 | 2 | #6 | 5-6 | 2 | #7 | 5-9 | 2 | #7 | 6-0 | 3 | #7 | 6-3 | 3 | #8 | 6-6 |
| e11 | str | 3 | #4 | 3-9 | 3 | #4 | 4-0 | 3 | #4 | 4-3 | 3 | #5 | 4-3 | 2 | #5 | 4-9 | 2 | #6 | 5-0 | 3 | #6 | 5-0 | 3 | #6 | 5-3 | 3 | #7 | 5-6 | 3 | #7 | 5-9 |
| e12 | str | 3 | #4 | 3-3 | 3 | #4 | 3-6 | 3 | #4 | 3-9 | 3 | #4 | 3-9 | 3 | #5 | 4-3 | 3 | #5 | 4-6 | 3 | #5 | 4-6 | 3 | #5 | 4-9 | 3 | #5 | 5-0 | 3 | #6 | 5-3 |
| e13 | str | 3 | #4 | 3-0 | 3 | #4 | 3-0 | 3 | #4 | 3-3 | 3 | #4 | 3-3 | 3 | #4 | 4-0 | 3 | #4 | 4-0 | 3 | #4 | 4-0 | 3 | #4 | 4-3 | 3 | #4 | 4-3 | 3 | #5 | 4-6 |
| e14 | str | | | | | | | | | | | | | 3 | #4 | 3-6 | 3 | #4 | 3-6 | 3 | #4 | 3-6 | 3 | #4 | 3-9 | 3 | #4 | 3-9 | 3 | #4 | 4-0 |
| f1 | str | 4 | #4 | 7-6 | 4 | #4 | 7-9 | 4 | #4 | 8-3 | 4 | #4 | 8-6 | 4 | #4 | 8-9 | 4 | #4 | 9-0 | 4 | #4 | 9-6 | 4 | #4 | 9-9 | 4 | #4 | 10-0 | 4 | #4 | 10-6 |
| f2 | str | 4 | #4 | 8-9 | 4 | #4 | 9-0 | 4 | #4 | 9-6 | 3 | #4 | 9-6 | 4 | #4 | 9-9 | 4 | #4 | 10-3 | 4 | #4 | 10-6 | 4 | #4 | 11-0 | 4 | #4 | 11-3 | 4 | #4 | 11-9 |
| f3 | str | 3 | #4 | 10-0 | 4 | #4 | 10-3 | 4 | #4 | 11-3 | 3 | #4 | 10-6 | 3 | #4 | 11-0 | 3 | #4 | 11-6 | 4 | #4 | 11-9 | 4 | #4 | 12-3 | 4 | #4 | 12-6 | 4 | #4 | 13-3 |
| f4 | str | | | | | | | | | | 3 | #4 | 11-6 | 3 | #4 | 11-9 | 3 | #4 | 12-6 | 3 | #4 | 13-0 | 3 | #4 | 13-6 | 4 | #4 | 13-9 | 4 | #4 | 14-6 |
| f5 | str | 3 | #4 | 6-0 | 3 | #4 | 6-3 | 3 | #4 | 6-6 | 3 | #4 | 6-9 | 3 | #4 | 7-0 | 3 | #4 | 7-3 | 3 | #4 | 7-6 | 3 | #4 | 7-9 | 3 | #4 | 8-0 | 3 | #4 | 8-3 |
| f6 | str | 2 | #4 | 8-0 | 3 | #4 | 8-6 | 3 | #4 | 8-9 | 3 | #4 | 9-3 | 2 | #4 | 9-0 | 2 | #4 | 9-6 | 2 | #4 | 10-0 | 3 | #4 | 10-0 | 3 | #4 | 10-3 | 3 | #4 | 10-9 |
| f7 | str | 2 | #4 | 10-0 | 2 | #4 | 10-9 | 2 | #4 | 11-0 | 2 | #4 | 11-6 | 2 | #4 | 10-9 | 2 | #4 | 11-0 | 2 | #4 | 11-6 | 2 | #4 | 12-3 | 2 | #4 | 12-6 | 2 | #4 | 13-0 |
| f8 | str | | | | | | | | | | | | | 2 | #4 | 12-3 | 2 | #4 | 12-6 | 2 | #4 | 13-0 | 2 | #4 | 13-9 | 2 | #4 | 14-0 | 2 | #4 | 14-6 |
| m1 | str | 3 | #4 | 17-0 | 3 | #4 | 18-0 | 3 | #4 | 18-9 | 3 | #4 | 19-9 | 4 | #4 | 20-9 | 4 | #4 | 21-6 | 4 | #4 | 22-6 | 4 | #4 | 23-3 | 4 | #4 | 24-0 | 4 | #4 | 25-0 |
| m2 | str | 1 | #4 | 17-0 | 1 | #4 | 18-0 | 1 | #4 | 18-9 | 1 | #4 | 19-9 | 1 | #4 | 20-9 | 1 | #4 | 21-6 | 1 | #4 | 22-6 | 1 | #4 | 23-3 | 1 | #4 | 24-0 | 1 | #4 | 25-0 |
| m3 | str | 3 | #4 | 14-0 | 3 | #4 | 14-9 | 3 | #4 | 15-6 | 3 | #4 | 16-3 | 4 | #4 | 17-0 | 4 | #4 | 17-6 | 4 | #4 | 18-3 | 4 | #4 | 19-0 | 4 | #4 | 19-9 | 4 | #4 | 20-6 |
| m4 | str | 1 | #4 | 14-0 | 1 | #4 | 14-9 | 1 | #4 | 15-6 | 1 | #4 | 16-3 | 1 | #4 | 17-0 | 1 | #4 | 17-6 | 1 | #4 | 18-3 | 1 | #4 | 19-0 | 1 | #4 | 19-9 | 1 | #4 | 20-6 |
| n1 | str | 3 | #4 | 17-6 | 3 | #4 | 18-6 | 3 | #4 | 19-6 | 3 | #4 | 20-3 | 4 | #4 | 21-6 | 4 | #4 | 22-3 | 4 | #4 | 23-3 | 4 | #4 | 24-3 | 4 | #4 | 25-3 | 4 | #4 | 26-3 |
| n2 | str | 1 | #4 | 17-6 | 1 | #4 | 18-6 | 1 | #4 | 19-6 | 1 | #4 | 20-3 | 1 | #4 | 21-6 | 1 | #4 | 22-3 | 1 | #4 | 23-3 | 1 | #4 | 24-3 | 1 | #4 | 25-3 | 1 | #4 | 26-3 |
| p | str | 4 | #5 | 13-0 | 4 | #5 | 13-9 | 4 | #5 | 14-3 | 4 | #5 | 15-0 | 4 | #5 | 15-9 | 4 | #5 | 16-6 | 4 | #5 | 17-3 | 4 | #5 | 17-9 | 4 | #5 | 18-9 | 4 | #5 | 19-3 |
| q | str | 2 | #6 | 15-0 | 2 | #6 | 15-9 | 2 | #6 | 16-3 | 2 | #6 | 17-0 | 2 | #6 | 17-9 | 2 | #6 | 18-6 | 2 | #6 | 19-3 | 2 | #6 | 19-9 | 2 | #6 | 20-9 | 2 | #6 | 21-3 |
| g | str | 2 | #4 | 12-3 | 2 | #4 | 12-9 | 2 | #4 | 13-6 | 2 | #4 | 14-0 | 2 | #4 | 14-9 | 2 | #4 | 15-6 | 2 | #4 | 16-0 | 2 | #4 | 16-9 | 2 | #4 | 17-6 | 2 | #4 | 18-0 |
| u | B | 9 | #4 | 4-6 | 9 | #4 | 4-6 | 10 | #4 | 4-6 | 10 | #4 | 4-9 | 10 | #4 | 4-9 | 11 | #4 | 4-9 | 11 | #4 | 4-9 | 12 | #4 | 5-0 | 12 | #4 | 5-0 | 13 | #4 | 5-0 |
| v | str | 1 | #4 | 16-9 | 1 | #4 | 17-6 | 1 | #4 | 18-3 | 1 | #4 | 19-0 | 1 | #4 | 19-9 | 1 | #4 | 20-6 | 1 | #4 | 21-9 | 1 | #4 | 22-6 | 1 | #4 | 23-3 | 1 | #4 | 24-0 |
| w | str | 1 | #4 | 9-6 | 1 | #4 | 9-9 | 1 | #4 | 10-3 | 1 | #4 | 10-9 | 1 | #4 | 11-3 | 1 | #4 | 11-9 | 1 | #4 | 12-6 | 1 | #4 | 13-0 | 1 | #4 | 13-3 | 1 | #4 | 14-0 |

| Pipe Dia | DIMENSIONS | | | | | | | | | | | | | | | | | | | |
|---|---|---|---|---|---|---|---|---|---|---|---|---|---|---|---|---|---|---|---|---|
| | A | B | C | D | E | F | G | H | J | K | L | M | N | P | R | S | T | V | W | X |
| 90" | 0-6 | 2-1 | 2-2 | 0-10 | 5-1 | 15-6 | 6-6 | 9-6 | 6-3 | 17-4 5/8 | 7-4 5/8 | 6-3 1/8 | 0-6 | 10-6 | 9-6 | 4-9 | 14-6 | 5-5 | 7-6 | 6-4 3/8 |
| 96" | 0-3 | 2-2 | 2-2 | 1-0 | 5-4 | 16-4 | 6-10 | 10-0 | 6-7 | 18-3 1/8 | 7-9 1/8 | 6-6 7/8 | 0-5 | 11-0 | 10-0 | 5-0 | 15-2 | 5-8 | 7-10 | 6-8 3/8 |
| 102" | 0-6 | 2-2 | 2-4 | 1-1 | 5-7 | 17-2 | 7-2 | 10-6 | 6-11 | 19-1 3/4 | 8-1 3/4 | 6-10 7/8 | 0-4 | 11-7 | 10-6 | 5-3 | 15-11 | 6-0 | 8-2 | 7-0 3/8 |
| 108" | 0-3 | 2-3 | 2-3 | 1-4 | 5-10 | 18-0 | 7-6 | 11-0 | 7-3 | 20-0 1/4 | 8-6 1/4 | 7-2 5/8 | 0-3 | 12-1 | 11-0 | 5-6 | 16-7 | 6-3 | 8-6 | 7-4 3/8 |
| 114" | 0-6 | 2-3 | 2-4 | 1-6 | 6-1 | 18-10 | 7-11 | 11-6 | 7-6 | 20-10 7/8 | 8-11 7/8 | 7-7 5/8 | 0-2 | 12-9 | 11-6 | 5-9 | 17-4 | 6-8 | 8-11 | 7-9 3/8 |
| 120" | 0-3 | 2-4 | 2-5 | 1-7 | 6-4 | 19-8 | 8-3 | 12-0 | 7-10 | 21-9 1/4 | 9-4 1/4 | 7-11 1/2 | 0-7 | 13-3 | 12-0 | 6-0 | 18-0 | 6-11 | 9-3 | 8-1 3/8 |
| 126" | 0-6 | 2-6 | 2-4 | 1-9 | 6-7 | 20-6 | 8-7 | 12-6 | 8-2 | 22-8 | 9-9 | 8-3 1/2 | 0-6 | 13-10 | 12-6 | 6-3 | 18-9 | 7-3 | 9-9 | 8-10 1/8 |
| 132" | 0-3 | 2-7 | 2-6 | 1-9 | 6-10 | 21-4 | 8-11 | 13-0 | 8-6 | 23-6 3/8 | 10-1 1/2 | 8-7 1/4 | 0-5 | 14-4 | 13-0 | 6-6 | 19-5 | 7-6 | 10-1 | 9-2 1/8 |
| 138" | 0-6 | 2-7 | 2-7 | 1-11 | 7-1 | 22-2 | 9-4 | 13-6 | 8-10 | 24-5 | 10-7 1/8 | 9-0 1/4 | 0-4 | 15-0 | 13-6 | 6-9 | 20-2 | 7-11 | 10-6 | 9-7 1/8 |
| 144" | 0-3 | 2-8 | 2-8 | 2-0 | 7-4 | 23-0 | 9-8 | 14-0 | 9-2 | 25-3 1/2 | 10-11 1/2 | 9-4 | 0-3 | 15-6 | 14-0 | 7-0 | 20-10 | 8-2 | 10-10 | 9-11 1/8 |

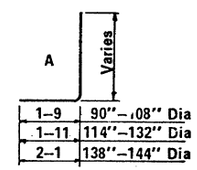


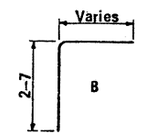


BENDS

### QUANTITIES

| Pipe Dia. | Reinf. (lbs) | Conc. (CY) |
|---|---|---|
| 90" | 1215 | 23.99 |
| 96" | 1415 | 26.13 |
| 102" | 1605 | 28.52 |
| 108" | 1765 | 30.78 |
| 114" | 2080 | 33.40 |
| 120" | 2305 | 35.99 |
| 126" | 2585 | 41.02 |
| 132" | 2945 | 44.05 |
| 138" | 3210 | 47.29 |
| 144" | 3705 | 50.47 |

NOTE:

Quantities and steel list shown are for one headwall.

Registered Professional Engineer (Civil) CERTIFICATE EXPIRES DEC. 31, 19 ARIZONA, U.S.A.

| DESIGN | K W | 9-72 | DRAWN | L A M | 9-72 | CHECKED | R L C | 9-72 |
|---|---|---|---|---|---|---|---|---|

DESIGN APPROVED: R C Buehler

APPROVED FOR DISTRIBUTION

ARIZONA
DEPARTMENT OF TRANSPORTATION
HIGHWAYS DIVISION
STANDARD PLANS

INLET AND OUTLET HEADWALLS
45° SKEW PIPE CULVERT
2:1 SLOPE

REVISION

STANDARD NO. PH-16

PLAN NO. 8-15.20

## STEEL LIST

| Mark | Bend | 90" Dia | | | 96" Dia | | | 102" Dia | | | 108" Dia | | | 114" Dia | | | 120" Dia | | | 126" Dia | | | 132" Dia | | | 138" Dia | | | 144" Dia | | |
|---|---|---|---|---|---|---|---|---|---|---|---|---|---|---|---|---|---|---|---|---|---|---|---|---|---|---|---|---|---|---|---|
| | | No | Size | Lgth | No | Size | Lgth | No | Size | Lgth | No | Size | Lgth | No | Size | Lgth | No | Size | Lgth | No | Size | Lgth | No | Size | Lgth | No | Size | Lgth | No | Size | Lgth |
| a1 | A | 4 | #5 | 10-6 | 4 | #5 | 11-0 | 4 | #6 | 11-6 | 4 | #6 | 12-0 | 4 | #6 | 12-6 | 5 | #7 | 13-0 | 5 | #7 | 13-3 | 5 | #8 | 13-9 | 5 | #8 | 14-3 | 5 | #8 | 14-9 |
| a2 | A | 4 | #5 | 11-0 | 4 | #6 | 11-6 | 4 | #6 | 12-0 | 4 | #6 | 12-6 | 4 | #7 | 13-0 | 4 | #7 | 13-6 | 5 | #8 | 13-9 | 5 | #8 | 14-3 | 5 | #8 | 14-9 | 5 | #8 | 15-3 |
| a3 | A | 3 | #6 | 11-6 | 4 | #6 | 11-9 | 4 | #6 | 12-3 | 4 | #7 | 12-9 | 4 | #7 | 13-3 | 4 | #7 | 13-9 | 4 | #8 | 14-3 | 5 | #8 | 14-9 | 5 | #8 | 15-3 | 5 | #8 | 15-9 |
| a4 | A | 3 | #6 | 11-9 | 3 | #6 | 12-3 | 4 | #7 | 12-9 | 4 | #7 | 13-3 | 4 | #7 | 13-9 | 4 | #8 | 14-3 | 4 | #8 | 14-9 | 4 | #8 | 15-3 | 5 | #8 | 15-9 | 5 | #8 | 16-3 |
| a5 | A | 3 | #6 | 12-3 | 3 | #7 | 12-6 | 3 | #7 | 13-3 | 3 | #7 | 13-6 | 4 | #8 | 14-0 | 4 | #8 | 14-6 | 4 | #8 | 15-3 | 4 | #8 | 15-9 | 4 | #8 | 16-3 | 4 | #8 | 16-9 |
| a6 | A | | | | | | | | | | | | | | | | | | | | | | | | | | | | | | |
| a7 | A | | | | | | | | | | | | | | | | | | | 3 | #4 | 7-0 | 12 | #4 | 6-6 | 13 | #4 | 8-3 | 18 | #4 | 8-9 |
| a8 | A | 3 | #4 | 9-0 | 3 | #4 | 9-6 | 4 | #5 | 9-9 | 4 | #5 | 10-0 | 4 | #6 | 10-9 | 4 | #6 | 11-0 | 4 | #6 | 11-3 | 4 | #6 | 11-9 | 4 | #6 | 12-0 | 4 | #7 | 12-6 |
| a9 | A | 3 | #4 | 9-9 | 3 | #5 | 10-3 | 3 | #5 | 10-9 | 4 | #6 | 11-0 | 4 | #6 | 11-6 | 4 | #6 | 11-9 | 4 | #7 | 12-3 | 4 | #7 | 12-6 | 4 | #7 | 13-0 | 4 | #7 | 13-6 |
| a10 | A | 3 | #5 | 10-6 | 3 | #6 | 11-0 | 3 | #6 | 11-6 | 3 | #7 | 12-0 | 3 | #7 | 12-6 | 4 | #7 | 13-0 | 4 | #8 | 13-3 | 4 | #8 | 13-6 | 4 | #8 | 14-0 | 4 | #8 | 14-6 |
| a11 | A | 3 | #6 | 11-3 | 3 | #6 | 11-9 | 3 | #7 | 12-3 | 3 | #7 | 12-9 | 3 | #7 | 13-6 | 3 | #8 | 14-0 | 3 | #8 | 14-3 | 4 | #8 | 14-6 | 4 | #8 | 15-0 | 4 | #8 | 15-6 |
| a12 | A | 2 | #6 | 11-9 | 3 | #7 | 12-3 | 3 | #7 | 12-9 | 2 | #7 | 13-3 | 3 | #8 | 14-0 | 2 | #8 | 14-6 | 3 | #8 | 15-3 | 3 | #8 | 15-6 | 3 | #8 | 16-0 | 4 | #8 | 16-6 |
| a13 | A | | | | | | | | | | | | | | | | | | | 2 | #4 | 7-0 | 6 | #4 | 6-6 | 6 | #4 | 7-3 | 7 | #4 | 7-9 |
| b1 | str | 2 | #4 | 16-6 | 2 | #4 | 17-3 | 2 | #4 | 18-0 | 2 | #4 | 18-9 | 2 | #4 | 19-6 | 2 | #4 | 20-3 | 2 | #4 | 21-3 | 2 | #4 | 22-0 | 2 | #4 | 23-0 | 2 | #4 | 23-9 |
| b2 | str | 10 | #4 | 16-3 | 12 | #4 | 17-0 | 12 | #4 | 17-9 | 12 | #4 | 18-6 | 14 | #4 | 19-3 | 14 | #4 | 20-0 | 14 | #4 | 21-0 | 14 | #4 | 21-9 | 16 | #4 | 22-9 | 16 | #4 | 23-6 |
| b3 | str | 2 | #4 | 15-3 | 2 | #4 | 6-6 | 2 | #4 | 10-6 | 2 | #4 | 15-6 | 2 | #4 | 5-6 | 2 | #4 | 10-6 | 2 | #4 | 15-0 | 2 | #4 | 19-6 | 2 | #4 | 10-6 | 2 | #4 | 15-0 |
| b4 | str | | | | | | | | | | | | | | | | | | | | | | 2 | #4 | 5-9 | | | | | | |
| b5 | str | | | | | | | | | | | | | | | | | | | | | | | | | | | | | | |
| b6 | str | 2 | #4 | 13-6 | 2 | #4 | 14-0 | 2 | #4 | 14-9 | 2 | #4 | 15-6 | 2 | #4 | 16-0 | 2 | #4 | 16-6 | 2 | #4 | 17-3 | 2 | #4 | 18-0 | 2 | #4 | 18-6 | 2 | #4 | 19-0 |
| b7 | str | 8 | #4 | 13-6 | 10 | #4 | 14-0 | 10 | #4 | 14-9 | 10 | #4 | 15-6 | 10 | #4 | 16-0 | 12 | #4 | 16-6 | 12 | #4 | 17-3 | 12 | #4 | 18-0 | 12 | #4 | 18-6 | 12 | #4 | 19-0 |
| b8 | str | 2 | #4 | 12-9 | 2 | #4 | 8-9 | 2 | #4 | 10-9 | 2 | #4 | 12-9 | 2 | #4 | 14-6 | 2 | #4 | 10-9 | 2 | #4 | 12-6 | 2 | #4 | 14-6 | 2 | #4 | 16-6 | 2 | #4 | 18-6 |
| b9 | str | 2 | #4 | 6-9 | 2 | #4 | 2-9 | 2 | #4 | 4-9 | 2 | #4 | 8-9 | 2 | #4 | 8-6 | 2 | #4 | 4-9 | 2 | #4 | 6-6 | 2 | #4 | 8-9 | 2 | #4 | 10-9 | 2 | #4 | 12-6 |
| b10 | str | | | | | | | | | | | | | 2 | #4 | 2-6 | | | | | | | 2 | #4 | 2-6 | 2 | #4 | 4-6 | 2 | #4 | 6-9 |
| b11 | str | | | | | | | | | | | | | | | | | | | | | | | | | | | | | | |
| c | str | 5 | #4 | 10-6 | 5 | #4 | 11-0 | 5 | #4 | 11-6 | 5 | #4 | 12-0 | 5 | #4 | 12-6 | 5 | #4 | 13-0 | 5 | #4 | 13-6 | 5 | #4 | 14-0 | 5 | #4 | 14-6 | 5 | #4 | 15-0 |
| d | A | 6 | #6 | 12-3 | 6 | #6 | 12-9 | 6 | #7 | 13-3 | 6 | #7 | 13-9 | 6 | #7 | 14-6 | 6 | #7 | 15-0 | 6 | #7 | 15-6 | 6 | #7 | 16-0 | 6 | #7 | 16-6 | 6 | #7 | 17-0 |
| e1 | str | 5 | #4 | 3-3 | 4 | #4 | 3-6 | 5 | #4 | 3-6 | 5 | #4 | 3-9 | 5 | #5 | 4-0 | 5 | #5 | 4-0 | 5 | #5 | 4-3 | 5 | #5 | 4-3 | 5 | #6 | 4-9 | 5 | #6 | 5-0 |
| e2 | str | 4 | #4 | 3-6 | 5 | #4 | 3-9 | 5 | #4 | 3-9 | 5 | #5 | 4-0 | 5 | #5 | 4-3 | 4 | #5 | 4-3 | 5 | #5 | 4-6 | 5 | #6 | 4-6 | 5 | #6 | 5-0 | 5 | #6 | 5-3 |
| e3 | str | 4 | #4 | 3-9 | 5 | #4 | 4-0 | 5 | #5 | 4-0 | 5 | #5 | 4-3 | 5 | #5 | 4-6 | 4 | #5 | 4-6 | 4 | #6 | 4-9 | 5 | #6 | 5-0 | 5 | #7 | 5-3 | 5 | #7 | 5-6 |
| e4 | str | 4 | #4 | 4-0 | 4 | #5 | 4-3 | 4 | #5 | 4-3 | 5 | #5 | 4-6 | 5 | #6 | 4-9 | 4 | #6 | 4-9 | 4 | #6 | 5-0 | 4 | #7 | 5-3 | 5 | #7 | 5-6 | 5 | #7 | 5-9 |
| e5 | str | | | | | | | | | | | | | | | | 4 | #6 | 5-0 | 4 | #7 | 5-3 | 4 | #7 | 5-6 | 4 | #7 | 5-9 | 5 | #8 | 6-0 |
| e6 | str | | | | | | | | | | | | | | | | | | | | | | | | | | | | | | |
| e7 | str | 2 | #4 | 4-3 | 2 | #5 | 4-6 | 2 | #5 | 4-9 | 2 | #5 | 5-0 | 2 | #6 | 5-0 | 2 | #6 | 5-3 | 2 | #7 | 5-6 | 2 | #7 | 5-9 | 2 | #7 | 6-0 | 2 | #8 | 6-3 |
| e8 | str | 13 | #4 | 4-3 | 14 | #5 | 4-6 | 15 | #5 | 4-9 | 15 | #5 | 5-0 | 16 | #6 | 5-0 | 17 | #6 | 5-3 | 17 | #7 | 5-6 | 18 | #7 | 5-9 | 19 | #7 | 6-0 | 20 | #8 | 6-3 |
| e9 | str | 4 | #4 | 4-3 | 4 | #5 | 4-6 | 4 | #5 | 4-9 | 4 | #5 | 5-0 | 4 | #6 | 5-0 | 4 | #6 | 5-3 | 4 | #7 | 5-6 | 4 | #7 | 5-9 | 4 | #7 | 6-0 | 4 | #8 | 6-3 |
| e10 | str | 5 | #4 | 4-0 | 5 | #5 | 4-3 | 5 | #5 | 4-6 | 5 | #5 | 4-9 | 4 | #6 | 4-9 | 3 | #6 | 5-3 | 3 | #7 | 5-3 | 3 | #7 | 5-6 | 4 | #7 | 5-9 | 4 | #8 | 6-0 |
| e11 | str | 5 | #4 | 3-9 | 5 | #4 | 3-9 | 5 | #4 | 4-3 | 4 | #5 | 4-6 | 4 | #5 | 4-6 | 3 | #6 | 5-0 | 3 | #6 | 5-0 | 4 | #6 | 5-3 | 4 | #7 | 5-6 | 4 | #7 | 5-9 |
| e12 | str | 5 | #4 | 3-3 | 5 | #4 | 3-6 | 6 | #4 | 3-9 | 4 | #4 | 4-3 | 4 | #4 | 4-3 | 4 | #5 | 4-9 | 4 | #5 | 4-9 | 4 | #6 | 5-0 | 4 | #6 | 5-3 | 4 | #6 | 5-6 |
| e13 | str | | | | | | | | | | 4 | #4 | 3-9 | 5 | #4 | 4-0 | 4 | #4 | 4-6 | 4 | #4 | 4-6 | 4 | #5 | 4-9 | 4 | #5 | 5-0 | 4 | #5 | 5-3 |
| e14 | str | | | | | | | | | | | | | | | | 4 | #4 | 4-3 | 4 | #4 | 4-3 | 4 | #4 | 4-6 | 4 | #4 | 4-9 | 4 | #4 | 5-0 |
| f1 | str | 4 | #4 | 8-9 | 4 | #4 | 9-3 | 4 | #4 | 9-9 | 4 | #4 | 10-3 | 4 | #4 | 10-6 | 4 | #4 | 11-0 | 4 | #4 | 11-3 | 4 | #4 | 11-9 | 4 | #4 | 12-3 | 5 | #4 | 12-6 |
| f2 | str | 4 | #4 | 9-6 | 4 | #4 | 10-0 | 3 | #4 | 10-6 | 3 | #4 | 10-9 | 4 | #4 | 11-3 | 4 | #4 | 11-9 | 4 | #4 | 12-0 | 4 | #4 | 12-6 | 4 | #4 | 12-9 | 4 | #4 | 13-3 |
| f3 | str | 4 | #4 | 10-3 | 4 | #4 | 10-9 | 3 | #4 | 11-0 | 3 | #4 | 11-3 | 3 | #4 | 11-9 | 3 | #4 | 12-3 | 4 | #4 | 12-9 | 4 | #4 | 13-3 | 4 | #4 | 13-6 | 4 | #4 | 14-0 |
| f4 | str | | | | | | | 3 | #4 | 11-3 | 3 | #4 | 11-9 | 3 | #4 | 12-3 | 3 | #4 | 12-9 | 3 | #4 | 13-3 | 3 | #4 | 13-9 | 4 | #4 | 14-3 | 4 | #4 | 14-9 |
| f5 | str | 4 | #4 | 7-3 | 4 | #4 | 7-9 | 4 | #4 | 8-0 | 4 | #4 | 8-6 | 3 | #4 | 8-9 | 3 | #4 | 9-0 | 3 | #4 | 9-6 | 4 | #4 | 9-9 | 4 | #4 | 10-0 | 4 | #4 | 10-6 |
| f6 | str | 3 | #4 | 8-9 | 3 | #4 | 9-3 | 4 | #4 | 9-6 | 4 | #4 | 10-0 | 3 | #4 | 9-9 | 3 | #4 | 10-3 | 3 | #4 | 10-6 | 3 | #4 | 11-3 | 3 | #4 | 11-6 | 4 | #4 | 12-0 |
| f7 | str | 3 | #4 | 10-0 | 3 | #4 | 10-9 | 3 | #4 | 11-0 | 3 | #4 | 11-6 | 3 | #4 | 10-9 | 3 | #4 | 11-3 | 3 | #4 | 11-9 | 3 | #4 | 12-3 | 3 | #4 | 12-9 | 3 | #4 | 13-6 |
| f8 | str | | | | | | | | | | | | | 3 | #4 | 12-0 | 3 | #4 | 12-6 | 3 | #4 | 12-9 | 3 | #4 | 13-6 | 3 | #4 | 13-9 | 3 | #4 | 14-6 |
| m1 | str | 3 | #4 | 17-9 | 3 | #4 | 18-6 | 3 | #4 | 19-3 | 3 | #4 | 20-3 | 3 | #4 | 21-0 | 3 | #4 | 21-9 | 3 | #4 | 22-9 | 4 | #4 | 23-9 | 4 | #4 | 24-9 | 4 | #4 | 25-6 |
| m2 | str | 1 | #4 | 17-9 | 1 | #4 | 18-6 | 1 | #4 | 19-3 | 1 | #4 | 20-3 | 1 | #4 | 21-0 | 1 | #4 | 21-9 | 1 | #4 | 22-9 | 1 | #4 | 23-9 | 1 | #4 | 24-9 | 1 | #4 | 25-6 |
| m3 | str | 3 | #4 | 18-3 | 3 | #4 | 18-9 | 3 | #4 | 19-9 | 3 | #4 | 20-9 | 3 | #4 | 21-6 | 3 | #4 | 22-3 | 3 | #4 | 23-3 | 4 | #4 | 24-0 | 4 | #4 | 24-9 | 4 | #4 | 26-6 |
| m4 | str | 1 | #4 | 18-3 | 1 | #4 | 18-9 | 1 | #4 | 19-9 | 1 | #4 | 20-9 | 1 | #4 | 21-6 | 1 | #4 | 22-3 | 1 | #4 | 23-3 | 1 | #4 | 24-0 | 1 | #4 | 24-9 | 1 | #4 | 26-6 |
| n1 | str | 3 | #4 | 17-9 | 3 | #4 | 18-6 | 3 | #4 | 19-6 | 3 | #4 | 20-6 | 3 | #4 | 21-6 | 3 | #4 | 22-3 | 3 | #4 | 23-3 | 4 | #4 | 24-0 | 4 | #4 | 25-0 | 4 | #4 | 26-0 |
| n2 | str | 1 | #4 | 17-9 | 1 | #4 | 18-6 | 1 | #4 | 19-6 | 1 | #4 | 20-6 | 1 | #4 | 21-6 | 1 | #4 | 22-3 | 1 | #4 | 23-3 | 1 | #4 | 24-0 | 1 | #4 | 25-0 | 1 | #4 | 26-0 |
| p | str | 4 | #5 | 13-9 | 4 | #5 | 14-6 | 4 | #5 | 15-3 | 4 | #5 | 15-9 | 4 | #5 | 16-6 | 4 | #5 | 17-3 | 4 | #5 | 18-0 | 4 | #5 | 18-9 | 4 | #5 | 19-6 | 4 | #5 | 20-3 |
| q | str | 2 | #6 | 14-9 | 2 | #6 | 15-6 | 2 | #6 | 16-3 | 2 | #6 | 16-9 | 2 | #6 | 17-6 | 2 | #6 | 18-3 | 2 | #6 | 19-0 | 2 | #6 | 19-9 | 2 | #6 | 20-6 | 2 | #6 | 21-3 |
| g | str | 2 | #4 | 12-0 | 2 | #4 | 12-6 | 2 | #4 | 13-0 | 2 | #4 | 13-6 | 2 | #4 | 14-6 | 2 | #4 | 15-3 | 2 | #4 | 15-9 | 2 | #4 | 16-3 | 2 | #4 | 17-3 | 2 | #4 | 17-9 |
| u | B | 9 | #4 | 4-0 | 9 | #4 | 4-0 | 10 | #4 | 4-0 | 10 | #4 | 4-0 | 10 | #4 | 4-3 | 11 | #4 | 4-3 | 11 | #4 | 4-3 | 12 | #4 | 4-3 | 12 | #4 | 4-6 | 13 | #4 | 4-6 |
| v | str | 1 | #4 | 17-0 | 1 | #4 | 17-9 | 1 | #4 | 18-9 | 1 | #4 | 19-6 | 1 | #4 | 20-0 | 1 | #4 | 20-9 | 1 | #4 | 21-9 | 1 | #4 | 22-6 | 1 | #4 | 23-6 | 1 | #4 | 24-3 |
| w | str | 1 | #4 | 14-0 | 1 | #4 | 14-6 | 1 | #4 | 15-0 | 1 | #4 | 15-6 | 1 | #4 | 16-3 | 1 | #4 | 16-9 | 1 | #4 | 17-6 | 1 | #4 | 17-9 | 1 | #4 | 18-6 | 1 | #4 | 19-0 |

| Pipe Dia | DIMENSIONS | | | | | | | | | | | | | | | | | | | |
|---|---|---|---|---|---|---|---|---|---|---|---|---|---|---|---|---|---|---|---|---|
| | A | B | C | D | E | F | G | H | J | K | L | M | N | P | R | S | T | V | W | X |
| 90" | 0-6 | 2-1 | 2-4 | 0-8 | 5-1 | 16-3 | 6-6 | 9-6 | 7-9 | 18-1 5/8 | 7-4 5/8 | 6-3 1/8 | 0-4 | 10-6 | 13-6 | 6-2 | 18-6 | 5-5 | 7-6 | 6-4 3/8 |
| 96" | 0-3 | 2-2 | 2-6 | 0-8 | 5-4 | 17-0 | 6-10 | 10-0 | 8-2 | 18-11 1/8 | 7-9 1/8 | 6-6 7/8 | 0-3 | 11-0 | 14-0 | 6-6 | 19-2 | 5-8 | 7-10 | 6-8 3/8 |
| 102" | 0-1 1/2 | 2-2 | 2-8 | 0-9 | 5-7 | 17-9 | 7-2 | 10-6 | 8-8 | 19-8 3/4 | 8-1 3/4 | 6-10 7/8 | 0-2 | 11-7 | 14-9 | 6-10 | 20-2 | 6-0 | 8-2 | 7-0 3/8 |
| 108" | 0-6 | 2-3 | 2-10 | 0-9 | 5-10 | 18-6 | 7-6 | 11-0 | 9-1 | 20-6 1/4 | 8-6 1/4 | 7-2 5/8 | 0-6 | 12-1 | 15-6 | 7-2 | 21-1 | 6-3 | 8-6 | 7-4 3/8 |
| 114" | 0-3 | 2-3 | 3-0 | 0-10 | 6-1 | 19-3 | 7-11 | 11-6 | 9-6 | 21-3 7/8 | 8-11 7/8 | 7-7 5/8 | 0-4 | 12-9 | 16-0 | 7-6 | 21-10 | 6-8 | 8-11 | 7-9 3/8 |
| 120" | 0-6 | 2-4 | 3-2 | 0-10 | 6-4 | 20-0 | 8-3 | 12-0 | 9-11 | 22-1 1/4 | 9-4 1/4 | 7-11 1/2 | 0-3 | 13-3 | 16-6 | 7-10 | 22-6 | 6-11 | 9-3 | 8-1 3/8 |
| 126" | 0-4 1/2 | 2-6 | 3-2 | 0-11 | 6-7 | 21-0 | 8-7 | 12-6 | 10-3 | 23-2 | 9-9 | 8-3 1/2 | 0-3 | 13-10 | 17-3 | 8-2 | 23-6 | 7-3 | 9-9 | 8-10 1/8 |
| 132" | 0-3 | 2-7 | 3-4 | 0-11 | 6-10 | 21-9 | 8-11 | 13-0 | 10-8 | 23-11 3/8 | 10-1 3/8 | 8-7 1/4 | 0-2 | 14-4 | 18-0 | 8-6 | 24-5 | 7-6 | 10-1 | 9-2 1/8 |
| 138" | 0-6 | 2-7 | 3-6 | 1-0 | 7-1 | 22-9 | 9-4 | 13-6 | 11-1 | 25-0 1/8 | 10-7 1/8 | 9-0 1/4 | 0-2 | 15-0 | 18-6 | 8-10 | 25-2 | 7-11 | 10-6 | 9-7 1/8 |
| 144" | 0-3 | 2-8 | 3-8 | 1-0 | 7-4 | 23-6 | 9-8 | 14-0 | 11-6 | 25-9 1/2 | 10-11 1/2 | 9-4 | 0-6 | 15-6 | 19-0 | 9-3 | 25-10 | 8-2 | 10-10 | 9-11 1/8 |

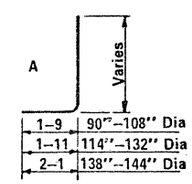


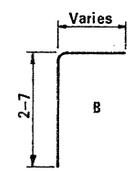


BENDS

### QUANTITIES

| Pipe Dia. | Reinf. (lbs) | Conc. (CY) |
|---|---|---|
| 90" | 1395 | 27.51 |
| 96" | 1655 | 29.95 |
| 102" | 1920 | 32.67 |
| 108" | 2090 | 35.47 |
| 114" | 2460 | 38.38 |
| 120" | 2700 | 41.24 |
| 126" | 3155 | 47.41 |
| 132" | 3580 | 50.91 |
| 138" | 3880 | 54.69 |
| 144" | 4315 | 58.23 |

NOTE:

Quantities and steel list shown are for one headwall.

Registered Professional Engineer (Civil) CERTIFICATE EXPIRES DEC. 31, 19 ARIZONA, U.S.A.

| DESIGN | K W | 9-72 | DRAWN | LAM | 9-72 | CHECKED | RLC | 9-72 |
|---|---|---|---|---|---|---|---|---|

| DESIGN APPROVED | ARIZONA DEPARTMENT OF TRANSPORTATION HIGHWAYS DIVISION STANDARD PLANS | REVISION |
|---|---|---|
| APPROVED FOR DISTRIBUTION | INLET AND OUTLET HEADWALLS 45° SKEW PIPE CULVERT 4:1 SLOPE | STANDARD NO. PH-17 PLAN NO. B-15.30 |

## STEEL LIST

| Mark | Bend | 90" Dia No | Size | Lgth | 96" Dia. No | Size | Lgth | 102" Dia. No | Size | Lgth | 108" Dia. No | Size | Lgth | 114" Dia No | Size | Lgth |
|---|---|---|---|---|---|---|---|---|---|---|---|---|---|---|---|---|
| a1 | A | 5 | #5 | 11-3 | 5 | #6 | 11-9 | 5 | #6 | 12-3 | 5 | #6 | 12-6 | 5 | #7 | 13-0 |
| a2 | A | 5 | #6 | 11-6 | 5 | #6 | 12-0 | 4 | #6 | 12-6 | 5 | #7 | 12-9 | 5 | #7 | 13-6 |
| a3 | A | 5 | #6 | 11-9 | 5 | #6 | 12-3 | 4 | #7 | 12-9 | 4 | #7 | 13-0 | 5 | #7 | 13-9 |
| a4 | A | 4 | #6 | 12-3 | 5 | #7 | 12-9 | 4 | #7 | 13-0 | 4 | #7 | 13-6 | 4 | #8 | 14-0 |
| a5 | A | | | | | | | 4 | #7 | 13-3 | 3 | #7 | 13-9 | 3 | #8 | 14-3 |
| a6 | A | | | | | | | | | | | | | | | |
| a7 | A | | | | | | | | | | | | | | | |
| a8 | A | 4 | #4 | 10-0 | 5 | #4 | 10-6 | 5 | #5 | 10-9 | 5 | #5 | 11-0 | 5 | #5 | 11-9 |
| a9 | A | 4 | #5 | 10-6 | 4 | #5 | 11-0 | 5 | #5 | 11-6 | 5 | #6 | 11-9 | 5 | #6 | 12-6 |
| a10 | A | 4 | #5 | 11-3 | 4 | #6 | 11-9 | 4 | #6 | 12-3 | 4 | #7 | 12-9 | 5 | #7 | 13-3 |
| a11 | A | 4 | #6 | 12-0 | 4 | #7 | 12-6 | 3 | #7 | 13-0 | 4 | #7 | 13-3 | 4 | #7 | 14-0 |
| a12 | A | | | | | | | | | | | | | | | |
| a13 | A | | | | | | | | | | | | | | | |
| b1 | str | 2 | #4 | 18-3 | 2 | #4 | 19-0 | 2 | #4 | 20-0 | 2 | #4 | 20-9 | 2 | #4 | 21-9 |
| b2 | str | 12 | #4 | 18-0 | 12 | #4 | 18-9 | 12 | #4 | 19-9 | 14 | #4 | 20-6 | 14 | #4 | 21-6 |
| b3 | str | | | | 2 | #4 | 8-0 | 2 | #4 | 15-3 | | | | 2 | #4 | 8-0 |
| b4 | str | | | | | | | | | | | | | | | |
| b5 | str | | | | | | | | | | | | | | | |
| b6 | str | 2 | #4 | 15-3 | 2 | #4 | 16-0 | 2 | #4 | 16-9 | 2 | #4 | 17-6 | 2 | #4 | 18-3 |
| b7 | str | 10 | #4 | 15-0 | 10 | #4 | 15-9 | 10 | #4 | 16-6 | 12 | #4 | 17-3 | 12 | #4 | 18-0 |
| b8 | str | 2 | #4 | 10-0 | 2 | #4 | 13-0 | 2 | #4 | 15-9 | 2 | #4 | 9-9 | 2 | #4 | 12-9 |
| b9 | str | | | | 2 | #4 | 3-9 | 2 | #4 | 6-9 | | | | 2 | #4 | 4-0 |
| b10 | str | | | | | | | | | | | | | | | |
| b11 | str | | | | | | | | | | | | | | | |
| c | str | 5 | #4 | 10-6 | 5 | #4 | 11-0 | 5 | #4 | 11-6 | 5 | #4 | 12-0 | 5 | #4 | 12-6 |
| d | A | 6 | #6 | 12-6 | 6 | #6 | 13-0 | 6 | #6 | 13-6 | 6 | #7 | 14-0 | 6 | #7 | 14-6 |
| e1 | str | 5 | #4 | 3-3 | 5 | #4 | 3-6 | 5 | #4 | 3-9 | 6 | #5 | 4-0 | 5 | #5 | 4-3 |
| e2 | str | 5 | #4 | 3-6 | 5 | #4 | 3-9 | 4 | #4 | 4-0 | 6 | #5 | 4-3 | 5 | #5 | 4-6 |
| e3 | str | 5 | #4 | 3-9 | 5 | #4 | 4-0 | 4 | #5 | 4-0 | 5 | #5 | 4-6 | 5 | #5 | 4-9 |
| e4 | str | 4 | #4 | 4-0 | 5 | #5 | 4-3 | 4 | #5 | 4-3 | 5 | #5 | 4-9 | 4 | #6 | 4-9 |
| e5 | str | | | | | | | 4 | #5 | 4-6 | | | | 4 | #6 | 5-0 |
| e6 | str | | | | | | | | | | | | | | | |
| e7 | str | 2 | #4 | 4-0 | 2 | #5 | 4-3 | 2 | #5 | 4-6 | 2 | #5 | 4-9 | 2 | #6 | 5-0 |
| e8 | str | 14 | #4. | 4-0 | 14 | #5 | 4-3 | 15 | #5 | 4-6 | 15 | #5 | 4-9 | 16 | #6 | 5-0 |
| e9 | str | 3 | #4 | 4-0 | 3 | #5 | 4-3 | 3 | #5 | 4-6 | 3 | #5 | 4-9 | 4 | #6 | 5-0 |
| e10 | str | 4 | #4 | 4-0 | 4 | #5 | 4-3 | 4 | #5 | 4-6 | 4 | #5 | 4-9 | 4 | #6 | 5-0 |
| e11 | str | 4 | #4 | 3-9 | 4 | #5 | 4-0 | 4 | #5 | 4-3 | 4 | #5 | 4-6 | 5 | #5 | 4-9 |
| e12 | str | 4 | #4 | 3-6 | 4 | #4 | 3-9 | 5 | #4 | 4-0 | 5 | #4 | 4-3 | 5 | #5 | 4-6 |
| e13 | str | 4 | #4 | 3-3 | 5 | #4 | 3-6 | 5 | #4 | 3-9 | 5 | #4 | 4-0 | 5 | #4 | 4-3 |
| e14 | str | | | | | | | | | | | | | | | |
| f1 | str | 5 | #4 | 9-6 | 5 | #4 | 9-9 | 5 | #4 | 10-3 | 5 | #4 | 10-6 | 5 | #4 | 11-0 |
| f2 | str | 4 | #4 | 9-9 | 4 | #4 | 10-3 | 5 | #4 | 10-9 | 5 | #4 | 11-3 | 5 | #4 | 11-9 |
| f3 | str | 4 | #4 | 10-3 | 4 | #4 | 10-9 | 4 | #4 | 11-3 | 5 | #4 | 11-9 | 5 | #4 | 12-3 |
| f4 | str | | | | | | | | | | | | | | | |
| f5 | str | 4 | #4 | 8-3 | 4 | #4 | 8-6 | 4 | #4 | 9-0 | 4 | #4 | 9-3 | 4 | #4 | 9-9 |
| f6 | str | 4 | #4 | 9-3 | 4 | #4 | 9-6 | 4 | #4 | 9-9 | 4 | #4 | 10-3 | 3 | #4 | 10-6 |
| f7 | str | 3 | #4 | 10-3 | 3 | #4 | 10-6 | 4 | #4 | 10-9 | 4 | #4 | 11-3 | 3 | #4 | 11-3 |
| f8 | str | | | | | | | | | | | | | 3 | #4 | 12-3 |
| m1 | str | 3 | #4 | 19-9 | 3 | #4 | 20-6 | 3 | #4 | 21-6 | 3 | #4 | 22-3 | 3 | #4 | 23-3 |
| m2 | str | 1 | #4 | 19-9 | 1 | #4 | 20-6 | 1 | #4 | 21-6 | 1 | #4 | 22-3 | 1 | #4 | 23-3 |
| m3 | str | 3 | #4 | 19-6 | 3 | #4 | 20-6 | 3 | #4 | 21-6 | 3 | #4 | 22-6 | 3 | #4 | 23-3 |
| m4 | str | 1 | #4 | 19-6 | 1 | #4 | 20-6 | 1 | #4 | 21-6 | 1 | #4 | 22-6 | 1 | #4 | 23-3 |
| n1 | str | 3 | #4 | 17-0 | 3 | #4 | 17-9 | 3 | #4 | 18-9 | 3 | #4 | 19-6 | 3 | #4 | 20-6 |
| n2 | str | 1 | #4 | 17-0 | 1 | #4 | 17-9 | 1 | #4 | 18-9 | 1 | #4 | 19-6 | 1 | #4 | 20-6 |
| p | str | 4 | #5 | 13-0 | 4 | #5 | 13-9 | 4 | #5 | 14-3 | 4 | #5 | 15-0 | 4 | #5 | 15-9 |
| q | str | 2 | #6 | 15-0 | 2 | #6 | 15-9 | 2 | #6 | 16-3 | 2 | #6 | 17-0 | 2 | #6 | 17-9 |
| g | str | 2 | #4 | 12-0 | 2 | #4 | 12-9 | 2 | #4 | 13-6 | 2 | #4 | 14-3 | 2 | #4 | 14-9 |
| u | B | 9 | #4 | 4-6 | 9 | #4 | 4-6 | 10 | #4 | 4-6 | 10 | #4 | 4-9 | 10 | #4 | 4-9 |
| v | str | 1 | #4 | 19-0 | 1 | #4 | 19-9 | 1 | #4 | 20-6 | 1 | #4 | 21-6 | 1 | #4 | 22-3 |
| w | str | 1 | #4 | 15-0 | 1 | #4 | 15-9 | 1 | #4 | 16-6 | 1 | #4 | 17-3 | 1 | #4 | 17-9 |

| Mark | Bend | 120" Dia. No | Size | Lgth | 126" Dia No | Size | Lgth | 132" Dia. No | Size | Lgth | 138" Dia No | Size | Lgth | 144" Dia. No | Size | Lgth |
|---|---|---|---|---|---|---|---|---|---|---|---|---|---|---|---|---|
| a1 | A | 5 | #7 | 13-6 | 5 | #7 | 13-9 | 5 | #8 | 14-3 | 6 | #8 | 15-0 | 6 | #8 | 15-6 |
| a2 | A | 5 | #7 | 14-0 | 5 | #8 | 14-3 | 5 | #8 | 14-9 | 5 | #8 | 15-6 | 6 | #8 | 16-0 |
| a3 | A | 5 | #8 | 14-3 | 5 | #8 | 14-9 | 5 | #8 | 15-0 | 5 | #8 | 15-9 | 5 | #8 | 16-3 |
| a4 | A | 4 | #8 | 14-6 | 5 | #8 | 15-0 | 5 | #8 | 15-6 | 5 | #8 | 16-0 | 5 | #8 | 16-6 |
| a5 | A | 4 | #8 | 14-9 | 4 | #8 | 15-3 | 5 | #8 | 15-9 | 5 | #8 | 16-6 | 5 | #8 | 17-0 |
| a6 | A | | | | | | | | | | | | | | | |
| a7 | A | | | | 3 | #4 | 7-3 | 14 | #4 | 7-6 | 19 | #4 | 7-9 | 26 | #4 | 8-6 |
| a8 | A | 4 | #6 | 12-0 | 5 | #6 | 12-6 | 5 | #7 | 12-9 | 5 | #7 | 13-3 | 5 | #7 | 13-9 |
| a9 | A | 4 | #6 | 12-6 | 4 | #7 | 13-0 | 4 | #7 | 13-6 | 5 | #7 | 14-0 | 5 | #7 | 14-6 |
| a10 | A | 4 | #7 | 13-3 | 4 | #7 | 13-9 | 4 | #7 | 14-3 | 4 | #8 | 14-9 | 5 | #8 | 15-3 |
| a11 | A | 4 | #7 | 14-0 | 4 | #8 | 14-6 | 4 | #8 | 15-0 | 4 | #8 | 15-6 | 4 | #8 | 16-0 |
| a12 | A | 4 | #8 | 14-6 | 3 | #8 | 15-0 | 4 | #8 | 15-6 | 4 | #8 | 16-3 | 4 | #8 | 16-9 |
| a13 | A | | | | | | | | | | 3 | #4 | 8-0 | 7 | #4 | 8-9 |
| b1 | str | 2 | #4 | 22-6 | 2 | #4 | 23-6 | 2 | #4 | 24-6 | 2 | #4 | 25-3 | 2 | #4 | 26-3 |
| b2 | str | 14 | #4 | 22-3 | 16 | #4 | 23-3 | 16 | #4 | 24-3 | 16 | #4 | 25-0 | 16 | #4 | 26-0 |
| b3 | str | 2 | #4 | 14-6 | | | | 2 | #4 | 8-9 | 2 | #4 | 14-9 | 2 | #4 | 21-6 |
| b4 | str | | | | | | | | | | | | | | | |
| b5 | str | | | | | | | | | | | | | | | |
| b6 | str | 2 | #4 | 19-0 | 2 | #4 | 19-9 | 2 | #4 | 20-6 | 2 | #4 | 21-3 | 2 | #4 | 22-0 |
| b7 | str | 12 | #4 | 18-9 | 14 | #4 | 19-6 | 14 | #4 | 20-3 | 14 | #4 | 21-0 | 14 | #4 | 21-9 |
| b8 | str | 2 | #4 | 16-0 | 2 | #4 | 10-0 | 2 | #4 | 12-9 | 2 | #4 | 15-9 | 2 | #4 | 19-0 |
| b9 | str | 2 | #4 | 7-0 | | | | 2 | #4 | 3-6 | 2 | #4 | 6-9 | 2 | #4 | 9-9 |
| b10 | str | | | | | | | | | | | | | | | |
| b11 | str | | | | | | | | | | | | | | | |
| c | str | 5 | #4 | 13-0 | 5 | #4 | 13-6 | 5 | #4 | 14-0 | 5 | #4 | 14-6 | 5 | #4 | 15-0 |
| d | A | 6 | #7 | 15-0 | 6 | #7 | 15-6 | 6 | #7 | 16-0 | 6 | #7 | 16-9 | 6 | #7 | 17-3 |
| e1 | str | 5 | #5 | 4-6 | 5 | #6 | 4-6 | 5 | #6 | 4-9 | 6 | #6 | 5-0 | 6 | #7 | 5-3 |
| e2 | str | 5 | #5 | 4-9 | 5 | #6 | 4-9 | 5 | #6 | 5-0 | 5 | #6 | 5-3 | 6 | #7 | 5-6 |
| e3 | str | 5 | #6 | 4-9 | 5 | #6 | 5-0 | 5 | #6 | 5-3 | 5 | #7 | 5-6 | 5 | #7 | 5-9 |
| e4 | str | 4 | #6 | 5-0 | 5 | #6 | 5-3 | 5 | #7 | 5-6 | 5 | #7 | 5-9 | 5 | #7 | 6-0 |
| e5 | str | 4 | #6 | 5-3 | 4 | #7 | 5-6 | 5 | #7 | 5-9 | 5 | #7 | 6-0 | 5 | #8 | 6-3 |
| e6 | str | | | | | | | | | | | | | | | |
| e7 | str | 2 | #6 | 5-3 | 2 | #7 | 5-6 | 2 | #7 | 5-9 | 2 | #7 | 6-0 | 2 | #8 | 6-3 |
| e8 | str | 16 | #6 | 5-3 | 17 | #7 | 5-6 | 17 | #7 | 5-9 | 18 | #7 | 6-0 | 19 | #8 | 6-3 |
| e9 | str | 4 | #6 | 5-3 | 4 | #7 | 5-6 | 4 | #7 | 5-9 | 4 | #7 | 6-0 | 4 | #8 | 6-3 |
| e10 | str | 4 | #6 | 5-3 | 4 | #6 | 5-6 | 4 | #7 | 5-9 | 4 | #7 | 6-0 | 4 | #8 | 6-3 |
| e11 | str | 4 | #6 | 5-0 | 4 | #6 | 5-3 | 4 | #6 | 5-6 | 4 | #7 | 5-9 | 4 | #7 | 6-0 |
| e12 | str | 4 | #5 | 5-0 | 4 | #6 | 5-0 | 4 | #6 | 5-3 | 4 | #6 | 5-6 | 5 | #7 | 5-9 |
| e13 | str | 4 | #5 | 4-9 | 4 | #5 | 4-9 | 4 | #5 | 5-0 | 5 | #6 | 5-3 | 5 | #6 | 5-6 |
| e14 | str | 4 | #5 | 4-6 | 5 | #5 | 4-6 | 5 | #5 | 4-9 | 5 | #6 | 5-0 | 5 | #6 | 5-3 |
| f1 | str | 4 | #4 | 11-6 | 4 | #4 | 12-0 | 5 | #4 | 12-6 | 5 | #4 | 12-9 | 5 | #4 | 13-3 |
| f2 | str | 4 | #4 | 12-0 | 4 | #4 | 12-6 | 4 | #4 | 13-0 | 5 | #4 | 13-3 | 5 | #4 | 13-9 |
| f3 | str | 4 | #4 | 12-3 | 4 | #4 | 12-9 | 4 | #4 | 13-3 | 4 | #4 | 13-9 | 4 | #4 | 14-3 |
| f4 | str | 4 | #4 | 12-9 | 4 | #4 | 13-3 | 4 | #4 | 13-9 | 4 | #4 | 14-3 | 4 | #4 | 14-9 |
| f5 | str | 4 | #4 | 10-3 | 4 | #4 | 10-6 | 4 | #4 | 10-9 | 4 | #4 | 11-3 | 4 | #4 | 11-9 |
| f6 | str | 3 | #4 | 11-0 | 4 | #4 | 11-6 | 4 | #4 | 11-9 | 4 | #4 | 12-3 | 4 | #4 | 12-6 |
| f7 | str | 3 | #4 | 12-0 | 3 | #4 | 12-6 | 3 | #4 | 12-9 | 4 | #4 | 13-3 | 4 | #4 | 13-6 |
| f8 | str | 3 | #4 | 12-6 | 3 | #4 | 13-3 | 3 | #4 | 13-6 | 3 | #4 | 14-3 | 3 | #4 | 14-6 |
| m1 | str | 3 | #4 | 24-3 | 3 | #4 | 25-3 | 4 | #4 | 26-3 | 4 | #4 | 27-0 | 4 | #4 | 28-0 |
| m2 | str | 1 | #4 | 24-3 | 1 | #4 | 25-3 | 1 | #4 | 26-3 | 1 | #4 | 27-0 | 1 | #4 | 28-0 |
| m3 | str | 3 | #4 | 24-3 | 3 | #4 | 25-3 | 4 | #4 | 26-3 | 4 | #4 | 27-3 | 4 | #4 | 28-0 |
| m4 | str | 1 | #4 | 24-3 | 1 | #4 | 25-3 | 1 | #4 | 26-3 | 1 | #4 | 27-3 | 1 | #4 | 28-0 |
| n1 | str | 3 | #4 | 21-6 | 3 | #4 | 22-3 | 4 | #4 | 23-3 | 4 | #4 | 24-3 | 4 | #4 | 25-0 |
| n2 | str | 1 | #4 | 21-6 | 1 | #4 | 22-3 | 1 | #4 | 23-3 | 1 | #4 | 24-3 | 1 | #4 | 25-0 |
| p | str | 4 | #5 | 16-6 | 4 | #5 | 17-3 | 4 | #5 | 17-9 | 4 | #5 | 18-9 | 4 | #5 | 19-3 |
| q | str | 2 | #6 | 18-6 | 2 | #6 | 19-3 | 2 | #6 | 19-9 | 2 | #6 | 20-9 | 2 | #6 | 21-3 |
| g | str | 2 | #4 | 15-6 | 2 | #4 | 16-0 | 2 | #4 | 16-9 | 2 | #4 | 17-3 | 2 | #4 | 18-0 |
| u | B | 11 | #4 | 4-9 | 11 | #4 | 4-9 | 12 | #4 | 5-0 | 12 | #4 | 5-0 | 13 | #4 | 5-0 |
| v | str | 1 | #4 | 23-3 | 1 | #4 | 24-0 | 1 | #4 | 25-0 | 1 | #4 | 25-9 | 1 | #4 | 26-9 |
| w | str | 1 | #4 | 18-6 | 1 | #4 | 19-3 | 1 | #4 | 20-0 | 1 | #4 | 20-9 | 1 | #4 | 21-3 |

## DIMENSIONS

| Pipe Dia. | A | B | C | D | E | F | G | H | J | K | L | M | N | P | R | S | T | V | W | X |
|---|---|---|---|---|---|---|---|---|---|---|---|---|---|---|---|---|---|---|---|---|
| 90" | 0-3 | 2-2 | 2-6 | 0-5 | 5-1 | 18-0 | 6-6 | 9-6 | 8-3 | 19-10 1/2 | 7-4 1/2 | 6-2 7/8 | 0-3 | 10-5 | 15-0 | 7-0 | 19-11 | 5-4 | 7-6 | 6-4 3/8 |
| 96" | 0-1 1/2 | 2-2 | 2-9 | 0-5 | 5-4 | 18-9 | 6-10 | 10-0 | 8-8 | 20-8 1/8 | 7-9 1/8 | 6-6 7/8 | 0-2 | 11-0 | 15-9 | 7-5 | 20-11 | 5-8 | 7-10 | 6-8 3/8 |
| 102" | 0-6 | 2-2 | 2-11 | 0-6 | 5-7 | 19-9 | 7-2 | 10-6 | 9-2 | 21-8 3/4 | 8-1 3/4 | 6-10 7/8 | 0-2 | 11-7 | 16-6 | 7-9 | 21-11 | 6-0 | 8-2 | 7-0 3/8 |
| 108" | 0-4 1/2 | 2-3 | 3-0 | 0-7 | 5-10 | 20-6 | 7-6 | 11-0 | 9-6 | 22-6 1/4 | 8-6 1/4 | 7-2 5/8 | 0-6 | 12-1 | 17-3 | 8-1 | 22-10 | 6-3 | 8-6 | 7-4 3/8 |
| 114" | 0-3 | 2-4 | 3-2 | 0-7 | 6-1 | 21-6 | 7-11 | 11-6 | 10-0 | 23-6 5/8 | 8-11 5/8 | 7-7 1/2 | 0-6 | 12-8 | 18-0 | 8-6 | 23-9 | 6-7 | 8-11 | 7-9 3/8 |
| 120" | 0-1 1/2 | 2-4 | 3-5 | 0-7 | 6-4 | 22-3 | 8-3 | 12-0 | 10-5 | 24-4 1/4 | 9-4 1/4 | 7-11 1/2 | 0-4 | 13-3 | 18-9 | 8-11 | 24-9 | 6-11 | 9-3 | 8-1 3/8 |
| 126" | 0-6 | 2-7 | 3-4 | 0-8 | 6-7 | 23-3 | 8-7 | 12-6 | 10-10 | 25-4 3/4 | 9-8 3/4 | 8-3 1/4 | 0-4 | 13-9 | 19-6 | 9-3 | 25-8 | 7-2 | 9-9 | 8-10 1/8 |
| 132" | 0-4 1/2 | 2-7 | 3-7 | 0-8 | 6-10 | 24-3 | 8-11 | 13-0 | 11-4 | 26-5 3/8 | 10-1 3/8 | 8-7 1/4 | 0-4 | 14-4 | 20-3 | 9-7 | 26-8 | 7-6 | 10-1 | 9-2 1/8 |
| 138" | 0-3 | 2-8 | 3-9 | 0-8 | 7-1 | 25-0 | 9-4 | 13-6 | 11-9 | 27-2 7/8 | 10-6 7/8 | 9-0 | 0-3 | 14-11 | 21-0 | 10-0 | 27-7 | 7-10 | 10-6 | 9-7 1/8 |
| 144" | 0-1 1/2 | 2-8 | 4-0 | 0-8 | 7-4 | 26-0 | 9-8 | 14-0 | 12-2 | 28-3 1/4 | 10-11 1/4 | 9-3 3/4 | 0-3 | 15-5 | 21-9 | 10-5 | 28-6 | 8-1 | 10-10 | 9-11 1/8 |

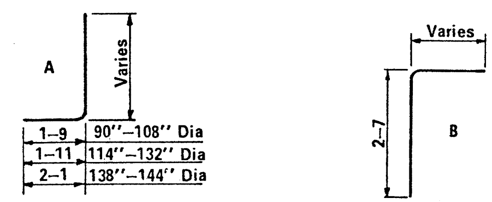


**BENDS**

## QUANTITIES

| Pipe Dia. | Reinf. (lbs) | Conc. (CY) |
|---|---|---|
| 90" | 1560 | 29.98 |
| 96" | 1840 | 32.78 |
| 102" | 2050 | 35.80 |
| 108" | 2325 | 38.64 |
| 114" | 2720 | 42.08 |
| 120" | 3075 | 45.38 |
| 126" | 3490 | 52.07 |
| 132" | 3960 | 56.09 |
| 138" | 4370 | 60.09 |
| 144" | 4910 | 64.31 |

**NOTE:**

Quantities and steel list shown are for one headwall.

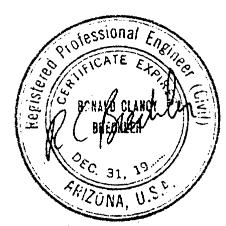


| DESIGN APPROVED | ARIZONA DEPARTMENT OF TRANSPORTATION HIGHWAYS DIVISION STANDARD PLANS | REVISION |
|---|---|---|
| APPROVED FOR DISTRIBUTION | INLET AND OUTLET HEADWALLS 45° SKEW PIPE CULVERT 6:1 SLOPE | STANDARD NO. PH-18 PLAN NO. B-15.40 |

DESIGN K W 9-72 | DRAWN L A M 9-72 | CHECKED R L C 9-72

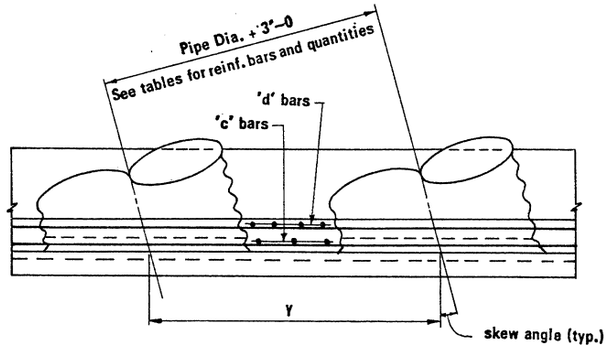


PLAN – INLET OR OUTLET END WITHOUT APRON

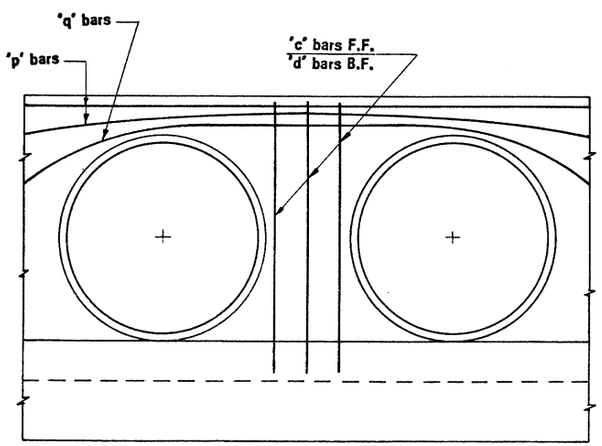


ELEVATION WITHOUT APRON

Note: Outlet end with apron similar.

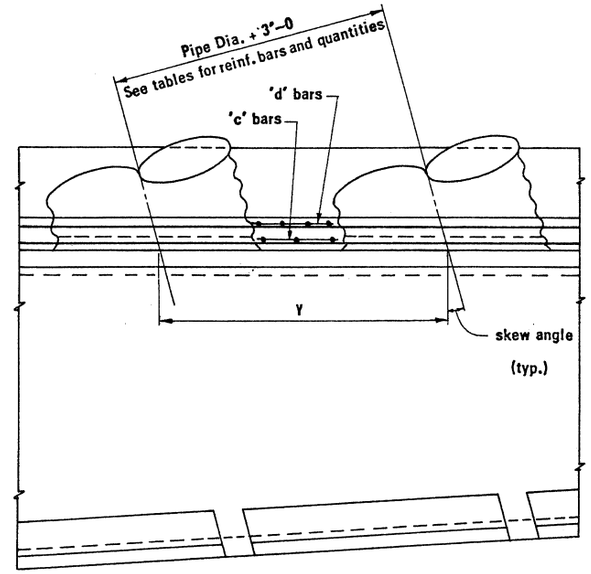


PLAN – OUTLET END WITH APRON

DIMENSION Y (FT)

| SKEW | PIPE DIA (INCHES) | | | | | | | | | |
|---|---|---|---|---|---|---|---|---|---|---|
| | 90" | 96" | 102" | 108" | 114" | 120" | 126" | 132" | 138" | 144" |
| Rt ∢ | 10-6 | 11-0 | 11-6 | 12-0 | 12-6 | 13-0 | 13-6 | 14-0 | 14-6 | 15-0 |
| 15° | 10-10 1/2 | 11-4 5/8 | 11-10 7/8 | 12-5 1/8 | 12-11 3/8 | 13-5 1/2 | 13-11 3/4 | 14-6 | 15-0 1/4 | 15-6 3/8 |
| 30° | 12-1 1/2 | 12-8 3/8 | 13-3 1/4 | 13-10 1/4 | 14-5 1/8 | 15-0 1/8 | 15-7 | 16-1 7/8 | 16-8 7/8 | 17-3 7/8 |
| 45° | 14-10 1/4 | 15-6 5/8 | 16-3 1/8 | 16-11 5/8 | 17-8 | 18-4 1/2 | 19-1 1/8 | 19-9 5/8 | 20-6 | 21-2 1/2 |

NO. OF ADDITIONAL BARS REQD. PER ADDITIONAL PIPE**

| SKEW | MARK | PIPE DIA. (inches) | | | | | | | | | |
|---|---|---|---|---|---|---|---|---|---|---|---|
| | | 90" | 96" | 102" | 108" | 114" | 120" | 126" | 132" | 138" | 144" |
| Rt ∢ | c | 3 | 3 | 3 | 3 | 3 | 3 | 3 | 3 | 3 | 3 |
| | d | 4 | 4 | 4 | 4 | 4 | 4 | 5 | 5 | 5 | 5 |
| | e8, r1, s | 10 | 10 | 11 | 11 | 12 | 12 | 13 | 13 | 14 | 14 |
| | h, u | 6 | 7 | 7 | 7 | 8 | 8 | 8 | 9 | 9 | 10 |
| 15° | c | 3 | 3 | 3 | 3 | 3 | 3 | 3 | 3 | 3 | 3 |
| | d | 4 | 4 | 4 | 4 | 5 | 5 | 6 | 6 | 6 | 6 |
| | e8, r1, s | 10 | 11 | 11 | 12 | 12 | 13 | 13 | 14 | 14 | 15 |
| | h, u | 7 | 7 | 7 | 8 | 8 | 8 | 9 | 9 | 10 | 10 |
| 30° | c | 3 | 3 | 3 | 3 | 3 | 3 | 3 | 3 | 3 | 3 |
| | d | 4 | 4 | 4 | 4 | 5 | 5 | 7 | 7 | 7 | 7 |
| | e8, r1, s | 11 | 12 | 13 | 13 | 14 | 14 | 15 | 15 | 16 | 17 |
| | h, u | 8 | 8 | 8 | 9 | 9 | 10 | 10 | 10 | 11 | 11 |
| 45° | c | 4 | 4 | 4 | 4 | 4 | 4 | 4 | 4 | 4 | 4 |
| | d | 5 | 5 | 5 | 5 | 6 | 6 | 9 | 9 | 9 | 9 |
| | e8, r1, s | 14 | 15 | 16 | 16 | 17 | 18 | 18 | 19 | 20 | 20 |
| | h, u | 10 | 10 | 10 | 11 | 11 | 12 | 12 | 13 | 13 | 14 |

**For inlet and outlet without apron omit bars "r1," "s" and "h."
For outlet with apron omit "u" bar.

CONC. QUANTITIES PER ADDITIONAL PIPE (C.Y.) OUTLET END WITH APRON

| Pipe Dia. | Rt ∢ | | | 15° | | | 30° | | | 45° | | |
|---|---|---|---|---|---|---|---|---|---|---|---|---|
| | 2:1 | 4:1 | 6:1 | 2:1 | 4:1 | 6:1 | 2:1 | 4:1 | 6:1 | 2:1 | 4:1 | 6:1 |
| 90" | 8.69 | 8.96 | 9.20 | 8.75 | 9.32 | 9.69 | 9.66 | 10.31 | 10.71 | 11.63 | 12.47 | 12.81 |
| 96" | 9.41 | 9.71 | 9.99 | 9.50 | 10.11 | 10.53 | 10.49 | 11.19 | 11.63 | 12.62 | 13.50 | 13.90 |
| 102" | 10.21 | 10.55 | 10.83 | 10.26 | 10.93 | 11.40 | 11.32 | 12.08 | 12.57 | 13.64 | 14.58 | 15.04 |
| 108" | 11.03 | 11.36 | 11.67 | 11.05 | 11.78 | 12.30 | 12.21 | 13.00 | 13.55 | 14.71 | 15.69 | 16.23 |
| 114" | 11.90 | 12.25 | 12.56 | 11.89 | 12.67 | 13.24 | 13.05 | 13.90 | 14.52 | 15.80 | 16.83 | 17.43 |
| 120" | 12.79 | 13.15 | 13.46 | 12.73 | 13.57 | 14.20 | 14.07 | 14.98 | 15.64 | 16.95 | 18.04 | 18.71 |
| 126" | 13.67 | 14.08 | 14.44 | 13.61 | 14.51 | 15.20 | 15.04 | 16.00 | 16.72 | 18.12 | 19.26 | 20.01 |
| 132" | 14.55 | 15.00 | 15.44 | 14.53 | 15.49 | 16.24 | 16.04 | 17.06 | 17.84 | 19.36 | 20.54 | 21.38 |
| 138" | 15.47 | 16.00 | 16.41 | 15.47 | 16.49 | 17.31 | 17.09 | 18.17 | 19.01 | 20.60 | 21.83 | 22.76 |
| 144" | 16.42 | 16.99 | 17.46 | 16.42 | 17.51 | 18.40 | 18.17 | 19.30 | 20.21 | 21.89 | 23.18 | 24.19 |

BAR LENGTH ADJUSTMENT PER ADDITIONAL PIPE (FT.)

| SKEW | MARK* | PIPE DIA (inches) | | | | | | | | | |
|---|---|---|---|---|---|---|---|---|---|---|---|
| | | 90" | 96" | 102" | 108" | 114" | 120" | 126" | 132" | 138" | 144" |
| Rt ∢ | j, n, p q, v and t1 to t7 | 10-6 | 11-0 | 11-6 | 12-0 | 12-6 | 13-0 | 13-6 | 14-0 | 14-6 | 15-0 |
| 15° | g,j,n1,n2,p,q and t1 to t11 | 10-9 | 11-3 | 12-0 | 12-6 | 13-0 | 13-6 | 14-0 | 14-6 | 15-0 | 15-6 |
| 30° | g,j,n1,n2,p,q and t1 to t10 | 12-0 | 12-9 | 13-3 | 13-9 | 14-6 | 15-0 | 15-6 | 16-3 | 16-9 | 17-3 |
| 45° | g,j,n1,n2,p,q and t1 to t10 | 14-9 | 15-6 | 16-3 | 17-0 | 17-9 | 18-3 | 19-0 | 19-9 | 20-6 | 21-3 |

*Increase bar lengths for single pipes by dimensions in table for each additional pipe.

INLET OR OUTLET QUANTITIES PER ADDITIONAL PIPE WITHOUT APRON

| Pipe Dia. | Conc. (CY) | | | | Reinforcing (lbs) | | | | | | | | | | | | | | |
|---|---|---|---|---|---|---|---|---|---|---|---|---|---|---|---|---|---|---|---|
| | Rt ∢ | 15° | 30° | 45° | Rt ∢ Inlet | | | Rt ∢ Outlet | | | 15° | | | 30° | | | 45° | | |
| | | | | | 2:1 | 4:1 | 6:1 | 2:1 | 4:1 | 6:1 | 2:1 | 4:1 | 6:1 | 2:1 | 4:1 | 6:1 | 2:1 | 4:1 | 6:1 |
| 90" | 6.02 | 6.23 | 6.95 | 8.51 | 280 | 270 | 265 | 260 | 265 | 265 | 280 | 265 | 265 | 280 | 280 | 280 | 350 | 350 | 350 |
| 96" | 6.52 | 6.76 | 7.54 | 9.22 | 320 | 335 | 325 | 320 | 330 | 300 | 320 | 300 | 300 | 320 | 320 | 320 | 400 | 395 | 395 |
| 102" | 7.05 | 7.30 | 8.13 | 9.96 | 335 | 345 | 345 | 335 | 340 | 340 | 365 | 340 | 340 | 370 | 365 | 370 | 460 | 455 | 420 |
| 108" | 7.58 | 7.89 | 8.75 | 10.73 | 420 | 395 | 355 | 370 | 390 | 355 | 430 | 365 | 365 | 385 | 380 | 385 | 480 | 475 | 480 |
| 114" | 8.15 | 8.44 | 9.34 | 11.51 | 450 | 455 | 440 | 445 | 445 | 445 | 485 | 435 | 445 | 485 | 465 | 485 | 590 | 570 | 575 |
| 120" | 8.72 | 9.03 | 10.07 | 12.34 | 465 | 470 | 460 | 500 | 460 | 460 | 515 | 460 | 470 | 500 | 485 | 500 | 620 | 600 | 605 |
| 126" | 9.32 | 9.65 | 10.75 | 13.18 | 580 | 580 | 565 | 575 | 575 | 565 | 620 | 550 | 525 | 640 | 620 | 640 | 795 | 770 | 775 |
| 132" | 9.93 | 10.30 | 11.46 | 14.05 | 595 | 605 | 585 | 595 | 595 | 590 | 660 | 590 | 600 | 665 | 655 | 665 | 840 | 825 | 830 |
| 138" | 10.57 | 10.95 | 12.20 | 14.94 | 685 | 635 | 620 | 675 | 630 | 620 | 680 | 610 | 620 | 705 | 690 | 705 | 885 | 870 | 880 |
| 144" | 11.22 | 11.62 | 12.95 | 15.86 | 720 | 715 | 700 | 700 | 710 | 700 | 715 | 705 | 715 | 810 | 795 | 810 | 1000 | 980 | 990 |

REINF. BAR QUANTITIES PER ADDITIONAL PIPE (lbs) OUTLET END WITH APRON

| Pipe Dia. | Rt ∢ | | | 15° | | | 30° | | | 45° | | |
|---|---|---|---|---|---|---|---|---|---|---|---|---|
| | 2:1 | 4:1 | 6:1 | 2:1 | 4:1 | 6:1 | 2:1 | 4:1 | 6:1 | 2:1 | 4:1 | 6:1 |
| 90" | 430 | 445 | 460 | 440 | 465 | 495 | 450 | 495 | 525 | 550 | 620 | 640 |
| 96" | 500 | 510 | 505 | 495 | 515 | 545 | 505 | 565 | 590 | 615 | 690 | 705 |
| 102" | 540 | 560 | 575 | 550 | 580 | 615 | 570 | 630 | 665 | 685 | 770 | 795 |
| 108" | 595 | 630 | 615 | 640 | 630 | 665 | 605 | 665 | 705 | 730 | 820 | 855 |
| 114" | 680 | 705 | 730 | 705 | 710 | 760 | 720 | 770 | 835 | 840 | 945 | 975 |
| 120" | 755 | 735 | 775 | 760 | 765 | 820 | 760 | 805 | 855 | 920 | 990 | 1040 |
| 126" | 855 | 875 | 910 | 870 | 875 | 895 | 915 | 965 | 1040 | 1095 | 1170 | 1225 |
| 132" | 905 | 920 | 955 | 935 | 940 | 1000 | 955 | 1020 | 1085 | 1185 | 1280 | 1335 |
| 138" | 1005 | 990 | 1020 | 965 | 970 | 1040 | 1015 | 1080 | 1155 | 1145 | 1355 | 1410 |
| 144" | 1040 | 1085 | 1120 | 1030 | 1030 | 1170 | 1140 | 1210 | 1275 | 1380 | 1480 | 1550 |

**NOTES:** Multipipe culvert headwall quantities are obtained by multiplying quantity shown in tables by the number of additional pipes and adding to single pipe headwall quantity.
Number of bars and quantities shown in tables are for one headwall.

Professional Engineer (Civil) — Certificate Expires Dec. 31, 19__ — Arizona, U.S.A.

| DESIGN | K.W. | 9-72 | DRAWN | LAM | 9-72 | CHECKED | RLC | 9-72 |
|---|---|---|---|---|---|---|---|---|

DESIGN APPROVED

APPROVED FOR DISTRIBUTION

ARIZONA
DEPARTMENT OF TRANSPORTATION
HIGHWAYS DIVISION
STANDARD PLANS

MULTIPLE HEADWALLS

REVISION

STANDARD NO. PH-19

PLAN NO. B-16.10

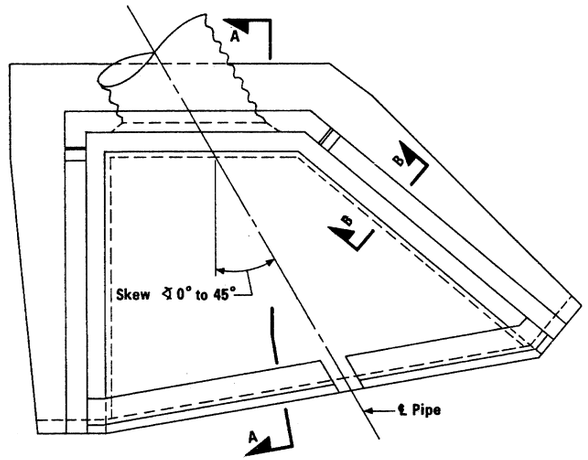


TYPICAL PLAN – HEADWALL WITH APRON

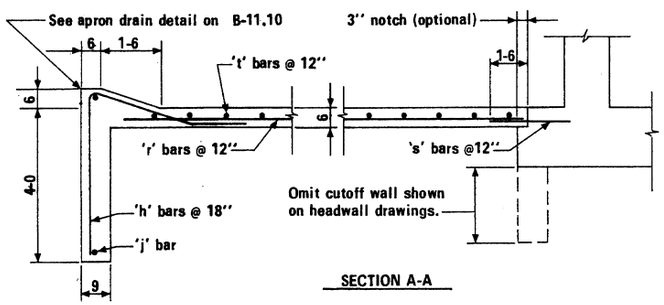


SECTION A-A

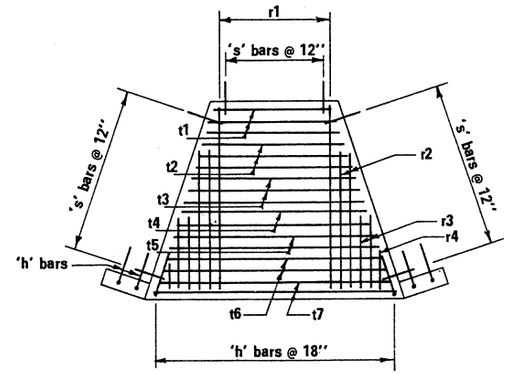


RIGHT ANGLE

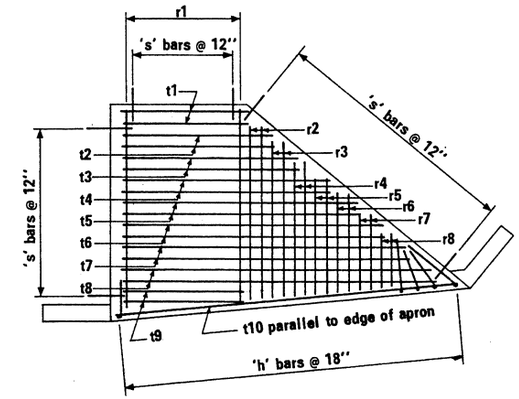


30° SKEW

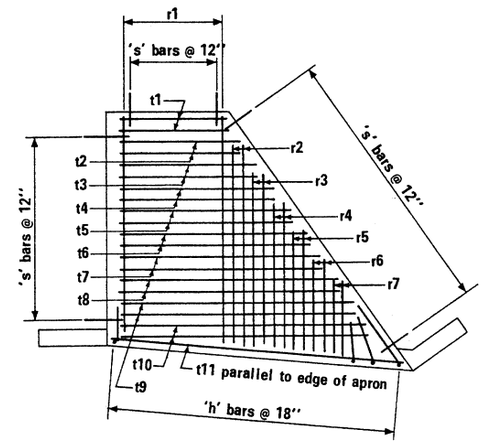


15° SKEW

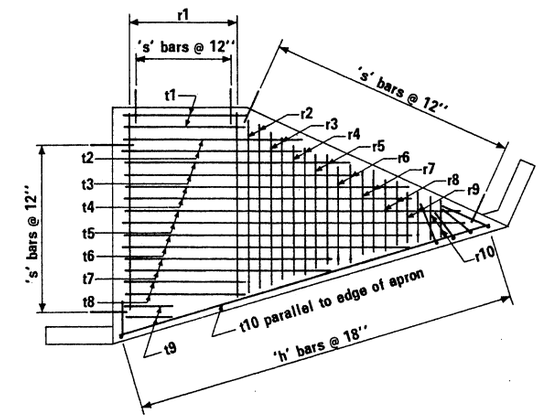


45° SKEW

REINFORCING STEEL LAYOUT

OUTLET APRON QUANTITIES*

| SKEW | RT ∢ | | | | | | 15° | | | | | | 30° | | | | | | 45° | | | | | |
|---|---|---|---|---|---|---|---|---|---|---|---|---|---|---|---|---|---|---|---|---|---|---|---|---|
| SLOPE | 2:1 | | 4:1 | | 6:1 | | 2:1 | | 4:1 | | 6:1 | | 2:1 | | 4:1 | | 6:1 | | 2:1 | | 4:1 | | 6:1 | |
| PIPE DIA. | REINF. (lbs) | CONC. (CY) | REINF. (lbs) | CONC. (CY) | REINF. (lbs) | CONC. (CY) | REINF. (lbs) | CONC. (CY) | REINF. (lbs) | CONC. (CY) | REINF. (lbs) | CONC. (CY) | REINF. (lbs) | CONC. (CY) | REINF. (lbs) | CONC. (CY) | REINF. (lbs) | CONC. (CY) | REINF. (lbs) | CONC. (CY) | REINF. (lbs) | CONC. (CY) | REINF. (lbs) | CONC. (CY) |
| 90'' | 190 | 3.70 | 235 | 4.38 | 265 | 4.88 | 205 | 3.38 | 250 | 4.21 | 325 | 4.91 | 245 | 4.17 | 305 | 5.28 | 400 | 6.36 | 275 | 5.42 | 380 | 6.54 | 430 | 7.31 |
| 96'' | 215 | 3.96 | 255 | 4.66 | 285 | 5.27 | 215 | 3.64 | 280 | 4.52 | 350 | 5.33 | 255 | 4.52 | 335 | 5.70 | 440 | 6.82 | 285 | 5.81 | 395 | 7.00 | 475 | 7.91 |
| 102'' | 240 | 4.35 | 270 | 5.07 | 315 | 5.71 | 235 | 3.95 | 305 | 4.93 | 385 | 5.83 | 280 | 4.92 | 365 | 6.22 | 465 | 7.34 | 305 | 6.28 | 430 | 7.57 | 515 | 8.58 |
| 108'' | 265 | 4.73 | 300 | 5.48 | 345 | 6.14 | 250 | 4.23 | 330 | 5.36 | 420 | 6.29 | 315 | 5.32 | 400 | 6.72 | 495 | 7.93 | 335 | 6.68 | 475 | 8.12 | 555 | 9.15 |
| 114'' | 290 | 5.15 | 340 | 5.95 | 370 | 6.61 | 270 | 4.58 | 355 | 5.71 | 440 | 6.78 | 330 | 5.75 | 425 | 7.15 | 545 | 8.50 | 360 | 7.21 | 500 | 8.70 | 595 | 9.88 |
| 120'' | 310 | 5.56 | 350 | 6.38 | 410 | 7.09 | 295 | 4.88 | 385 | 6.08 | 495 | 7.33 | 365 | 6.18 | 455 | 7.52 | 580 | 8.99 | 400 | 7.67 | 535 | 9.22 | 650 | 10.57 |
| 126'' | 330 | 5.85 | 385 | 6.79 | 425 | 7.50 | 315 | 5.23 | 415 | 6.56 | 530 | 7.88 | 390 | 6.63 | 485 | 8.18 | 620 | 9.60 | 425 | 8.18 | 565 | 9.94 | 690 | 11.28 |
| 132'' | 360 | 6.23 | 400 | 7.19 | 450 | 8.03 | 340 | 5.56 | 440 | 6.99 | 570 | 8.43 | 425 | 7.09 | 520 | 8.69 | 665 | 10.17 | 465 | 8.69 | 615 | 10.56 | 735 | 12.08 |
| 138'' | 380 | 6.59 | 430 | 7.68 | 500 | 8.56 | 355 | 5.96 | 470 | 7.44 | 605 | 9.03 | 455 | 7.56 | 555 | 9.20 | 680 | 10.8 | 485 | 9.29 | 660 | 11.30 | 775 | 12.83 |
| 144'' | 405 | 6.92 | 460 | 8.04 | 530 | 9.08 | 395 | 6.36 | 495 | 7.93 | 655 | 9.70 | 470 | 7.99 | 570 | 9.59 | 720 | 11.54 | 530 | 9.81 | 695 | 11.88 | 825 | 13.62 |

*The apron quantities take into consideration the cutoff walls being omitted along outlet headwall.

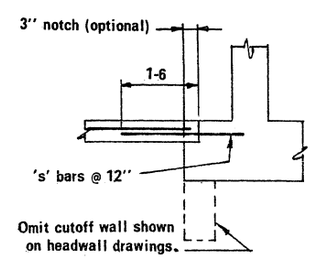


SECTION B-B

NOTES:

For General Notes and Misc. Details see B-11.10

For steel list and bend diagrams see B-17.20, B-17.30 or B-17.40

Registered Professional Engineer (Civil) CERTIFICATE EXPIRES DEC. 31, 19 RONALD CLANCY ARIZONA, U.S.A.

| DESIGN APPROVED | ARIZONA DEPARTMENT OF TRANSPORTATION HIGHWAYS DIVISION STANDARD PLANS | REVISION |
|---|---|---|
| APPROVED FOR DISTRIBUTION | OUTLET APRONS | STANDARD NO. PH-20 |
| | | PLAN NO. B-17.10 |

| DESIGN | DRAWN | CHECKED |
|---|---|---|
| K W 9-72 | LAM 9-72 | RLC 9-72 |

## RIGHT ANGLE

| Mark | Bend | 90" Dia | | | 96" Dia | | | 102" Dia | | | 108" Dia | | | 114" Dia | | | 120" Dia | | | 126" Dia | | | 132" Dia | | | 138" Dia | | | 144" Dia | | |
|---|---|---|---|---|---|---|---|---|---|---|---|---|---|---|---|---|---|---|---|---|---|---|---|---|---|---|---|---|---|---|---|
| | | No | Size | Lgth | No | Size | Lgth | No | Size | Lgth | No | Size | Lgth | No | Size | Lgth | No | Size | Lgth | No | Size | Lgth | No | Size | Lgth | No | Size | Lgth | No | Size | Lgth |
| h | C• | 12 | #4 | 7-3 | 15 | #4 | 7-3 | 15 | #4 | 7-3 | 16 | #4 | 7-3 | 17 | #4 | 7-3 | 17 | #4 | 7-3 | 18 | #4 | 7-3 | 19 | #4 | 7-3 | 20 | #4 | 7-3 | 20 | #4 | 7-3 |
| j | str. | 1 | #4 | 21-9 | 1 | #4 | 22-6 | 1 | #4 | 24-0 | 1 | #4 | 25-3 | 1 | #4 | 26-3 | 1 | #4 | 27-6 | 1 | #4 | 28-6 | 1 | #4 | 29-9 | 1 | #4 | 30-6 | 1 | #4 | 31-6 |
| r1 | str. | 9 | #4 | 10-6 | 9 | #4 | 11-0 | 10 | #4 | 11-6 | 10 | #4 | 12-3 | 11 | #4 | 12-9 | 11 | #4 | 13-6 | 12 | #4 | 14-0 | 12 | #4 | 14-6 | 13 | #4 | 15-0 | 13 | #4 | 15-3 |
| r2 | str | 4 | #4 | 5-6 | 4 | #4 | 6-6 | 4 | #4 | 7-0 | 4 | #4 | 7-9 | 4 | #4 | 8-0 | 4 | #4 | 8-9 | 4 | #4 | 8-9 | 4 | #4 | 9-6 | 4 | #4 | 9-6 | 4 | #4 | 10-0 |
| r3 | str | 2 | #4 | 2-9 | 2 | #4 | 3-6 | 2 | #4 | 3-6 | 2 | #4 | 5-0 | 2 | #4 | 5-0 | 4 | #4 | 3-6 | 4 | #4 | 3-0 | 4 | #4 | 4-0 | 4 | #4 | 3-6 | 4 | #4 | 4-6 |
| r4 | str | | | | | | | | | | | | | | | | | | | | | | | | | | | | | | |
| s | str | 31 | #4 | 2-0 | 32 | #4 | 2-0 | 33 | #4 | 2-0 | 33 | #4 | 2-6 | 36 | #4 | 2-6 | 38 | #4 | 2-6 | 40 | #4 | 2-6 | 40 | #4 | 3-0 | 41 | #4 | 3-0 | 43 | #4 | 3-0 |
| t1 | str | 3 | #4 | 8-3 | 3 | #4 | 9-0 | 3 | #4 | 9-6 | 3 | #4 | 9-9 | 3 | #4 | 10-3 | 3 | #4 | 10-6 | 3 | #4 | 11-0 | 3 | #4 | 11-6 | 3 | #4 | 12-3 | 3 | #4 | 12-6 |
| t2 | str | 3 | #4 | 10-6 | 3 | #4 | 11-0 | 3 | #4 | 11-6 | 3 | #4 | 11-9 | 3 | #4 | 12-3 | 3 | #4 | 12-6 | 3 | #4 | 13-6 | 3 | #4 | 13-9 | 3 | #4 | 14-0 | 3 | #4 | 14-6 |
| t3 | str | 3 | #4 | 13-0 | 3 | #4 | 13-3 | 3 | #4 | 14-0 | 3 | #4 | 14-3 | 3 | #4 | 14-6 | 3 | #4 | 14-9 | 3 | #4 | 15-9 | 3 | #4 | 16-0 | 3 | #4 | 16-3 | 3 | #4 | 16-9 |
| t4 | str | 2 | #4 | 15-0 | 2 | #4 | 15-6 | 3 | #4 | 16-0 | 2 | #4 | 16-6 | 2 | #4 | 17-0 | 3 | #4 | 17-3 | 3 | #4 | 18-0 | 3 | #4 | 18-0 | 3 | #4 | 18-6 | 3 | #4 | 19-0 |
| t5 | str | | | | | | | | | | 2 | #4 | 18-0 | 2 | #4 | 18-6 | 2 | #4 | 19-6 | 2 | #4 | 20-0 | 3 | #4 | 20-0 | 3 | #4 | 21-0 | 2 | #4 | 21-0 |
| t6 | str | | | | | | | | | | | | | | | | | | | | | | | | | | | | 2 | #4 | 22-6 |
| t7 | str | | | | | | | | | | | | | | | | | | | | | | | | | | | | | | |

## 30° SKEW

| Mark | Bend | 90" Dia | | | 96" Dia | | | 102" Dia | | | 108" Dia | | | 114" Dia | | | 120" Dia | | | 126" Dia | | | 132" Dia | | | 138" Dia | | | 144" Dia | | |
|---|---|---|---|---|---|---|---|---|---|---|---|---|---|---|---|---|---|---|---|---|---|---|---|---|---|---|---|---|---|---|---|
| | | No | Size | Lgth | No | Size | Lgth | No | Size | Lgth | No | Size | Lgth | No | Size | Lgth | No | Size | Lgth | No | Size | Lgth | No | Size | Lgth | No | Size | Lgth | No | Size | Lgth |
| h | C | 14 | #4 | 7-3 | 15 | #4 | 7-3 | 16 | #4 | 7-3 | 17 | #4 | 7-3 | 17 | #4 | 7-3 | 18 | #4 | 7-3 | 19 | #4 | 7-3 | 20 | #4 | 7-3 | 21 | #4 | 7-3 | 22 | #4 | 7-3 |
| j | str | 1 | #4 | 25-6 | 1 | #4 | 27-0 | 1 | #4 | 28-6 | 1 | #4 | 30-0 | 1 | #4 | 31-0 | 1 | #4 | 33-0 | 1 | #4 | 34-6 | 1 | #4 | 36-0 | 1 | #4 | 37-6 | 1 | #4 | 39-0 |
| r1 | str | 10 | #4 | 8-0 | 10 | #4 | 7-9 | 10 | #4 | 8-3 | 11 | #4 | 8-9 | 12 | #4 | 9-3 | 12 | #4 | 9-9 | 13 | #4 | 10-3 | 13 | #4 | 10-6 | 14 | #4 | 11-0 | 14 | #4 | 11-6 |
| r2 | str | 2 | #4 | 6-9 | 2 | #4 | 6-9 | 2 | #4 | 7-9 | 2 | #4 | 7-6 | 2 | #4 | 8-0 | 2 | #4 | 8-9 | 2 | #4 | 9-3 | 2 | #4 | 9-9 | 2 | #4 | 10-0 | 2 | #4 | 10-6 |
| r3 | str | 2 | #4 | 5-3 | 2 | #4 | 5-0 | 2 | #4 | 6-3 | 2 | #4 | 6-0 | 2 | #4 | 6-6 | 2 | #4 | 7-0 | 2 | #4 | 7-6 | 2 | #4 | 8-0 | 2 | #4 | 8-6 | 2 | #4 | 9-0 |
| r4 | str | 2 | #4 | 3-9 | 2 | #4 | 3-6 | 2 | #4 | 4-6 | 2 | #4 | 4-3 | 2 | #4 | 4-6 | 2 | #4 | 5-6 | 2 | #4 | 5-9 | 2 | #4 | 6-6 | 2 | #4 | 7-0 | 2 | #4 | 7-6 |
| r5 | str | | | | | | | 2 | #4 | 3-6 | 1 | #4 | 3-6 | 1 | #4 | 3-9 | 2 | #4 | 3-9 | 2 | #4 | 4-6 | 2 | #4 | 5-0 | 2 | #4 | 5-6 | 2 | #4 | 6-0 |
| r6 | str | | | | | | | | | | | | | | | | | | | | | | 2 | #4 | 4-0 | 3 | #4 | 3-0 | 3 | #4 | 4-3 |
| r7 | str | | | | | | | | | | | | | | | | | | | | | | | | | | | | | | |
| r8 | str | | | | | | | | | | | | | | | | | | | | | | | | | | | | | | |
| s | str | 30 | #4 | 3-0 | 30 | #4 | 3-0 | 32 | #4 | 3-0 | 34 | #4 | 3-0 | 35 | #4 | 3-0 | 37 | #4 | 3-0 | 38 | #4 | 3-0 | 41 | #4 | 3-0 | 42 | #4 | 3-0 | 44 | #4 | 3-0 |
| t1 | str | 2 | #4 | 9-6 | 2 | #4 | 10-3 | 2 | #4 | 11-0 | 2 | #4 | 11-6 | 2 | #4 | 12-0 | 2 | #4 | 12-0 | 2 | #4 | 13-0 | 2 | #4 | 13-6 | 2 | #4 | 14-0 | 2 | #4 | 14-9 |
| t2 | str | 2 | #4 | 12-0 | 2 | #4 | 12-6 | 2 | #4 | 13-3 | 2 | #4 | 13-9 | 2 | #4 | 14-0 | 2 | #4 | 14-6 | 2 | #4 | 15-6 | 2 | #4 | 15-9 | 2 | #4 | 16-3 | 2 | #4 | 17-3 |
| t3 | str | 2 | #4 | 14-6 | 2 | #4 | 15-0 | 2 | #4 | 15-9 | 2 | #4 | 16-3 | 2 | #4 | 16-6 | 2 | #4 | 17-0 | 2 | #4 | 17-9 | 2 | #4 | 18-0 | 2 | #4 | 18-9 | 2 | #4 | 19-6 |
| t4 | str | 2 | #4 | 17-0 | 2 | #4 | 17-3 | 2 | #4 | 18-0 | 2 | #4 | 18-6 | 2 | #4 | 18-9 | 2 | #4 | 19-3 | 2 | #4 | 20-0 | 2 | #4 | 20-6 | 2 | #4 | 21-0 | 2 | #4 | 21-9 |
| t5 | str | | | | 1 | #4 | 19-6 | 1 | #4 | 20-0 | 2 | #4 | 20-9 | 2 | #4 | 21-0 | 2 | #4 | 21-6 | 2 | #4 | 22-6 | 2 | #4 | 23-0 | 2 | #4 | 23-3 | 2 | #4 | 24-3 |
| t6 | str | | | | | | | | | | | | | | | | 1 | #4 | 24-0 | 1 | #4 | 25-0 | 2 | #4 | 25-0 | 2 | #4 | 25-9 | 2 | #4 | 26-6 |
| t7 | str | | | | | | | | | | | | | | | | | | | | | | | | | | | | | | |
| t8 | str | | | | | | | | | | | | | | | | | | | | | | | | | | | | | | |
| t9 | str | | | | | | | | | | | | | | | | | | | | | | | | | | | | | | |
| t10 | str | 1 | #4 | 19-3 | 1 | #4 | 20-3 | 1 | #4 | 21-6 | 1 | #4 | 22-9 | 1 | #4 | 24-0 | 1 | #4 | 25-0 | 1 | #4 | 26-3 | 1 | #4 | 27-6 | 1 | #4 | 28-6 | 1 | #4 | 29-6 |

## 15° SKEW

| Mark | Bend | 90" Dia | | | 96" Dia | | | 102" Dia | | | 108" Dia | | | 114" Dia | | | 120" Dia | | | 126" Dia | | | 132" Dia | | | 138" Dia | | | 144" Dia | | |
|---|---|---|---|---|---|---|---|---|---|---|---|---|---|---|---|---|---|---|---|---|---|---|---|---|---|---|---|---|---|---|---|
| | | No | Size | Lgth | No | Size | Lgth | No | Size | Lgth | No | Size | Lgth | No | Size | Lgth | No | Size | Lgth | No | Size | Lgth | No | Size | Lgth | No | Size | Lgth | No | Size | Lgth |
| h | C | 12 | #4 | 7-3 | 12 | #4 | 7-3 | 13 | #4 | 7-3 | 13 | #4 | 7-3 | 14 | #4 | 7-3 | 14 | #4 | 7-3 | 15 | #4 | 7-3 | 16 | #4 | 7-3 | 16 | #4 | 7-3 | 17 | #4 | 7-3 |
| j | str | 1 | #4 | 21-0 | 1 | #4 | 22-0 | 1 | #4 | 23-3 | 1 | #4 | 24-3 | 1 | #4 | 25-6 | 1 | #4 | 26-6 | 1 | #4 | 27-6 | 1 | #4 | 28-6 | 1 | #4 | 29-9 | 1 | #4 | 31-0 |
| r1 | str | 9 | #4 | 8-3 | 9 | #4 | 8-6 | 10 | #4 | 9-3 | 10 | #4 | 9-9 | 11 | #4 | 10-3 | 11 | #4 | 10-9 | 12 | #4 | 11-3 | 12 | #4 | 11-6 | 12 | #4 | 12-0 | 12 | #4 | 12-6 |
| r2 | str | 2 | #4 | 6-0 | 2 | #4 | 7-0 | 2 | #4 | 7-0 | 2 | #4 | 7-9 | 2 | #4 | 7-9 | 2 | #4 | 8-9 | 2 | #4 | 8-6 | 2 | #4 | 9-0 | 2 | #4 | 10-3 | 2 | #4 | 11-3 |
| r3 | str | 1 | #4 | 4-6 | 2 | #4 | 4-6 | 2 | #4 | 4-3 | 2 | #4 | 5-3 | 2 | #4 | 5-0 | 2 | #4 | 6-0 | 2 | #4 | 6-0 | 2 | #4 | 6-6 | 2 | #4 | 7-6 | 2 | #4 | 8-9 |
| r4 | str | | | | | | | | | | | | | | | | 1 | #4 | 4-9 | 1 | #4 | 5-0 | 1 | #4 | 5-0 | 2 | #4 | 5-0 | 2 | #4 | 6-0 |
| r5 | str | | | | | | | | | | | | | | | | | | | | | | | | | | | | | | |
| r6 | str | | | | | | | | | | | | | | | | | | | | | | | | | | | | | | |
| r7 | str | | | | | | | | | | | | | | | | | | | | | | | | | | | | | | |
| s | str | 26 | #4 | 3-0 | 26 | #4 | 3-0 | 28 | #4 | 3-0 | 29 | #4 | 3-0 | 31 | #4 | 3-0 | 33 | #4 | 3-0 | 33 | #4 | 3-0 | 34 | #4 | 3-0 | 36 | #4 | 3-0 | 38 | #4 | 3-0 |
| t1 | str | 2 | #4 | 8-6 | 2 | #4 | 9-0 | 2 | #4 | 9-3 | 2 | #4 | 9-9 | 2 | #4 | 10-3 | 2 | #4 | 10-6 | 2 | #4 | 11-0 | 2 | #4 | 11-6 | 2 | #4 | 12-0 | 2 | #4 | 12-6 |
| t2 | str | 2 | #4 | 10-3 | 2 | #4 | 10-6 | 2 | #4 | 11-0 | 2 | #4 | 11-3 | 2 | #4 | 11-9 | 2 | #4 | 12-0 | 2 | #4 | 12-6 | 2 | #4 | 12-9 | 2 | #4 | 13-3 | 2 | #4 | 13-9 |
| t3 | str | 2 | #4 | 11-3 | 2 | #4 | 12-0 | 2 | #4 | 12-3 | 2 | #4 | 12-9 | 2 | #4 | 13-0 | 2 | #4 | 13-6 | 2 | #4 | 14-0 | 2 | #4 | 14-6 | 2 | #4 | 15-0 | 2 | #4 | 15-3 |
| t4 | str | 2 | #4 | 12-6 | 2 | #4 | 13-0 | 2 | #4 | 13-6 | 2 | #4 | 14-0 | 2 | #4 | 14-6 | 2 | #4 | 14-9 | 2 | #4 | 15-3 | 2 | #4 | 15-9 | 2 | #4 | 16-3 | 2 | #4 | 17-0 |
| t5 | str | 1 | #4 | 14-0 | 1 | #4 | 14-6 | 1 | #4 | 15-0 | 2 | #4 | 15-6 | 2 | #4 | 16-0 | 2 | #4 | 16-0 | 2 | #4 | 16-9 | 2 | #4 | 17-0 | 2 | #4 | 17-6 | 2 | #4 | 18-3 |
| t6 | str | | | | | | | | | | | | | | | | 1 | #4 | 17-6 | 1 | #4 | 18-0 | 2 | #4 | 18-6 | 2 | #4 | 19-0 | 2 | #4 | 19-6 |
| t7 | str | | | | | | | | | | | | | | | | | | | | | | | | | | | | 1 | #4 | 21-0 |
| t8 | str | | | | | | | | | | | | | | | | | | | | | | | | | | | | | | |
| t9 | str | | | | | | | | | | | | | | | | | | | | | | | | | | | | | | |
| t10 | str | | | | | | | | | | | | | | | | | | | | | | | | | | | | | | |
| t11 | str | 1 | #4 | 15-0 | 1 | #4 | 15-6 | 1 | #4 | 16-6 | 1 | #4 | 17-6 | 1 | #4 | 18-3 | 1 | #4 | 19-0 | 1 | #4 | 20-0 | 1 | #4 | 20-6 | 1 | #4 | 21-6 | 1 | #4 | 22-6 |

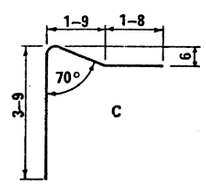


BEND.

## 45° SKEW

| Mark | Bend | 90" Dia | | | 96" Dia | | | 102" Dia | | | 108" Dia | | | 114" Dia | | | 120" Dia | | | 126" Dia | | | 132" Dia | | | 138" Dia | | | 144" Dia | | |
|---|---|---|---|---|---|---|---|---|---|---|---|---|---|---|---|---|---|---|---|---|---|---|---|---|---|---|---|---|---|---|---|
| | | No | Size | Lgth | No | Size | Lgth | No | Size | Lgth | No | Size | Lgth | No | Size | Lgth | No | Size | Lgth | No | Size | Lgth | No | Size | Lgth | No | Size | Lgth | No | Size | Lgth |
| h | c | 18 | #4 | 7-3 | 19 | #4 | 7-3 | 20 | #4 | 7-3 | 21 | #4 | 7-3 | 22 | #4 | 7-3 | 23 | #4 | 7-3 | 24 | #4 | 7-3 | 25 | #4 | 7-3 | 26 | #4 | 7-3 | 27 | #4 | 7-3 |
| j | str | 1 | #4 | 33-3 | 1 | #4 | 34-9 | 1 | #4 | 36-6 | 1 | #4 | 38-0 | 1 | #4 | 39-9 | 1 | #4 | 41-6 | 1 | #4 | 43-3 | 1 | #4 | 44-9 | 1 | #4 | 46-6 | 1 | #4 | 48-3 |
| r1 | str | 12 | #4 | 6-9 | 13 | #4 | 7-0 | 13 | #4 | 7-6 | 14 | #4 | 7-9 | 15 | #4 | 8-0 | 15 | #4 | 8-9 | 16 | #4 | 9-3 | 17 | #4 | 9-9 | 17 | #4 | 10-3 | 18 | #4 | 11-0 |
| r2 | str | 3 | #4 | 5-0 | 3 | #4 | 5-3 | 3 | #4 | 5-9 | 3 | #4 | 6-0 | 3 | #4 | 6-3 | 3 | #4 | 7-3 | 3 | #4 | 7-6 | 3 | #4 | 8-0 | 3 | #4 | 8-6 | 3 | #4 | 8-6 |
| r3 | str | 3 | #4 | 4-0 | 3 | #4 | 3-9 | 2 | #4 | 4-0 | 2 | #4 | 4-3 | 3 | #4 | 4-9 | 3 | #4 | 5-6 | 3 | #4 | 6-0 | 3 | #4 | 6-0 | 3 | #4 | 6-6 | 3 | #4 | 6-9 |
| r4 | str | | | | | | | 2 | #4 | 3-0 | 2 | #4 | 3-3 | 2 | #4 | 3-6 | 3 | #4 | 4-0 | 3 | #4 | 4-3 | 3 | #4 | 5-0 | 3 | #4 | 4-9 | 3 | #4 | 5-3 |
| r5 | str | | | | | | | | | | | | | | | | | | | | | | | | | 2 | #4 | 4-0 | 3 | #4 | 4-0 |
| r6 | str | | | | | | | | | | | | | | | | | | | | | | | | | | | | | | |
| r7 | str | | | | | | | | | | | | | | | | | | | | | | | | | | | | | | |
| r8 | str | | | | | | | | | | | | | | | | | | | | | | | | | | | | | | |
| r9 | str | | | | | | | | | | | | | | | | | | | | | | | | | | | | | | |
| r10 | str | | | | | | | | | | | | | | | | | | | | | | | | | | | | | | |
| s | str | 32 | #4 | 3-0 | 33 | #4 | 3-0 | 34 | #4 | 3-0 | 37 | #4 | 3-0 | 39 | #4 | 3-0 | 41 | #4 | 3-0 | 43 | #4 | 3-0 | 46 | #4 | 3-0 | 46 | #4 | 3-0 | 49 | #4 | 3-0 |
| t1 | str | 3 | #4 | 12-6 | 3 | #4 | 13-0 | 3 | #4 | 13-0 | 3 | #4 | 14-3 | 3 | #4 | 15-0 | 3 | #4 | 15-6 | 3 | #4 | 16-0 | 3 | #4 | 16-6 | 3 | #4 | 17-6 | 3 | #4 | 18-0 |
| t2 | str | 3 | #4 | 18-9 | 3 | #4 | 19-0 | 3 | #4 | 19-9 | 3 | #4 | 20-6 | 3 | #4 | 21-3 | 3 | #4 | 21-6 | 3 | #4 | 22-3 | 3 | #4 | 23-0 | 3 | #4 | 23-6 | 3 | #4 | 24-3 |
| t3 | str | | | | | | | 1 | #4 | 23-0 | 1 | #4 | 24-0 | 1 | #4 | 27-0 | 2 | #4 | 27-0 | 2 | #4 | 28-0 | 3 | #4 | 29-0 | 3 | #4 | 30-0 | 3 | #4 | 30-6 |
| t4 | str | 2 | #4 | 12-0 | 2 | #4 | 11-6 | 1 | #4 | 11-0 | 2 | #4 | 11-6 | 2 | #4 | 14-0 | 2 | #4 | 14-0 | 2 | #4 | 15-0 | 2 | #4 | 13-0 | 2 | #4 | 16-0 | 2 | #4 | 21-0 |
| t5 | str | | | | | | | | | | | | | | | | | | | | | | | | | | | | | | |
| t6 | str | | | | | | | | | | | | | | | | | | | | | | | | | | | | | | |
| t7 | str | | | | | | | | | | | | | | | | | | | | | | | | | | | | | | |
| t8 | str | | | | | | | | | | | | | | | | | | | | | | | | | | | | | | |
| t9 | str | | | | | | | | | | | | | | | | | | | | | | | | | | | | | | |
| t10 | str | 1 | #4 | 25-6 | 1 | #4 | 26-6 | 1 | #4 | 28-0 | 1 | #4 | 29-0 | 1 | #4 | 31-0 | 1 | #4 | 32-0 | 1 | #4 | 33-6 | 1 | #4 | 35-0 | 1 | #4 | 36-6 | 1 | #4 | 38-0 |

Registered Professional Engineer (Civil)
CERTIFICATE EXPIRES
RONALD CLARK BUCHLER
DEC. 31, 19
ARIZONA, U.S.A.

| DESIGN APPROVED | ARIZONA DEPARTMENT OF TRANSPORTATION HIGHWAYS DIVISION STANDARD PLANS | REVISION |
|---|---|---|
| APPROVED FOR DISTRIBUTION | OUTLET APRON STEEL LIST 2:1 SLOPE | STANDARD NO. PH-21 |
| | | PLAN NO. B-17.20 |

| DESIGN | KW | 9-72 | DRAWN | LAM | 9-72 | CHECKED | RLC | 9-72 |
|---|---|---|---|---|---|---|---|---|

## RIGHT ANGLE

| Mark | Bend | 90" Dia | | | 96" Dia | | | 102" Dia | | | 108" Dia | | | 114" Dia | | | 120" Dia | | | 126" Dia | | | 132" Dia | | | 138" Dia | | | 144" Dia | | |
|---|---|---|---|---|---|---|---|---|---|---|---|---|---|---|---|---|---|---|---|---|---|---|---|---|---|---|---|---|---|---|---|
| | | No | Size | Lgth | No | Size | Lgth | No | Size | Lgth | No | Size | Lgth | No | Size | Lgth | No | Size | Lgth | No | Size | Lgth | No | Size | Lgth | No | Size | Lgth | No | Size | Lgth |
| h | C | 16 | #4 | 7-3 | 17 | #4 | 7-3 | 17 | #4 | 7-3 | 18 | #4 | 7-3 | 18 | #4 | 7-3 | 19 | #4 | 7-3 | 20 | #4 | 7-3 | 20 | #4 | 7-3 | 21 | #4 | 7-3 | 21 | #4 | 7-3 |
| j | str | 1 | #4 | 25-3 | 1 | #4 | 26-3 | 1 | #4 | 27-3 | 1 | #4 | 28-6 | 1 | #4 | 29-6 | 1 | #4 | 30-6 | 1 | #4 | 32-0 | 1 | #4 | 33-0 | 1 | #4 | 34-0 | 1 | #4 | 35-3 |
| r1 | str | 9 | #4 | 11-0 | 9 | #4 | 11-6 | 10 | #4 | 12-3 | 10 | #4 | 13-9 | 11 | #4 | 13-6 | 11 | #4 | 14-3 | 12 | #4 | 15-0 | 12 | #4 | 15-6 | 12 | #4 | 16-0 | 13 | #4 | 16-6 |
| r2 | str | 4 | #4 | 7-3 | 4 | #4 | 8-0 | 4 | #4 | 8-3 | 4 | #4 | 8-0 | 4 | #4 | 10-3 | 4 | #4 | 10-0 | 4 | #4 | 10-3 | 4 | #4 | 11-3 | 4 | #4 | 12-6 | 4 | #4 | 12-0 |
| r3 | str | 2 | #4 | 4-6 | 2 | #4 | 5-3 | 2 | #4 | 5-0 | 2 | #4 | 6-3 | 4 | #4 | 5-3 | 4 | #4 | 5-0 | 4 | #4 | 6-3 | 4 | #4 | 6-0 | 4 | #4 | 7-0 | 4 | #4 | 5-9 |
| r4 | str | | | | | | | | | | | | | | | | | | | | | | | | | | | | | | |
| s | str | 33 | #4 | 3-0 | 35 | #4 | 3-0 | 36 | #4 | 3-0 | 38 | #4 | 3-0 | 39 | #4 | 3-0 | 41 | #4 | 3-0 | 42 | #4 | 3-0 | 44 | #4 | 3-0 | 46 | #4 | 3-0 | 48 | #4 | 3-0 |
| t1 | str | 3 | #4 | 8-6 | 3 | #4 | 8-9 | 3 | #4 | 9-3 | 3 | #4 | 9-6 | 3 | #4 | 10-0 | 3 | #4 | 10-6 | 3 | #4 | 11-0 | 3 | #4 | 11-6 | 3 | #4 | 12-0 | 3 | #4 | 12-3 |
| t2 | str | 3 | #4 | 11-0 | 3 | #4 | 11-0 | 3 | #4 | 11-6 | 3 | #4 | 12-0 | 3 | #4 | 12-3 | 3 | #4 | 12-9 | 3 | #4 | 13-3 | 3 | #4 | 13-9 | 3 | #4 | 14-3 | 3 | #4 | 14-6 |
| t3 | str | 3 | #4 | 13-0 | 3 | #4 | 13-3 | 3 | #4 | 13-9 | 3 | #4 | 14-3 | 3 | #4 | 14-6 | 3 | #4 | 15-3 | 3 | #4 | 15-6 | 3 | #4 | 16-0 | 3 | #4 | 16-6 | 3 | #4 | 16-6 |
| t4 | str | 3 | #4 | 15-6 | 2 | #4 | 15-3 | 2 | #4 | 15-9 | 3 | #4 | 16-6 | 3 | #4 | 16-9 | 3 | #4 | 17-6 | 3 | #4 | 17-6 | 3 | #4 | 18-0 | 3 | #4 | 18-9 | 3 | #4 | 18-9 |
| t5 | str | | | | 2 | #4 | 17-0 | 2 | #4 | 17-6 | 2 | #4 | 18-6 | 3 | #4 | 19-0 | 3 | #4 | 19-6 | 2 | #4 | 19-9 | 2 | #4 | 20-3 | 3 | #4 | 21-0 | 3 | #4 | 21-0 |
| t6 | str | | | | | | | | | | | | | | | | | | | 2 | #4 | 21-6 | 2 | #4 | 22-0 | 2 | #4 | 23-0 | 3 | #4 | 23-0 |
| t7 | str | | | | | | | | | | | | | | | | | | | | | | | | | | | | | | |

## 30° SKEW

| Mark | Bend | 90" Dia | | | 96" Dia | | | 102" Dia | | | 108" Dia | | | 114" Dia | | | 120" Dia | | | 126" Dia | | | 132" Dia | | | 138" Dia | | | 144" Dia | | |
|---|---|---|---|---|---|---|---|---|---|---|---|---|---|---|---|---|---|---|---|---|---|---|---|---|---|---|---|---|---|---|---|
| | | No | Size | Lgth | No | Size | Lgth | No | Size | Lgth | No | Size | Lgth | No | Size | Lgth | No | Size | Lgth | No | Size | Lgth | No | Size | Lgth | No | Size | Lgth | No | Size | Lgth |
| h | C | 14 | #4 | 7-3 | 15 | #4 | 7-3 | 16 | #4 | 7-3 | 17 | #4 | 7-3 | 17 | #4 | 7-3 | 18 | #4 | 7-3 | 18 | #4 | 7-3 | 19 | #4 | 7-3 | 20 | #4 | 7-3 | 20 | #4 | 7-3 |
| j | str | 1 | #4 | 28-0 | 1 | #4 | 29-3 | 1 | #4 | 31-0 | 1 | #4 | 32-6 | 1 | #4 | 34-3 | 1 | #4 | 35-0 | 1 | #4 | 37-0 | 1 | #4 | 39-0 | 1 | #4 | 40-0 | 1 | #4 | 42-0 |
| r1 | str | 9 | #4 | 11-0 | 10 | #4 | 11-6 | 11 | #4 | 12-3 | 11 | #4 | 12-9 | 12 | #4 | 13-0 | 12 | #4 | 13-6 | 13 | #4 | 14-0 | 13 | #4 | 14-6 | 14 | #4 | 15-0 | 14 | #4 | 15-6 |
| r2 | str | 2 | #4 | 9-3 | 2 | #4 | 9-3 | 2 | #4 | 9-6 | 2 | #4 | 10-6 | 2 | #4 | 10-6 | 2 | #4 | 11-3 | 2 | #4 | 11-6 | 2 | #4 | 12-6 | 2 | #4 | 12-6 | 2 | #4 | 13-3 |
| r3 | str | 2 | #4 | 7-3 | 2 | #4 | 7-3 | 2 | #4 | 7-6 | 2 | #4 | 8-6 | 2 | #4 | 8-6 | 2 | #4 | 9-3 | 2 | #4 | 9-6 | 2 | #4 | 10-6 | 2 | #4 | 10-6 | 2 | #4 | 11-0 |
| r4 | str | 2 | #4 | 5-3 | 2 | #4 | 5-3 | 2 | #4 | 5-6 | 2 | #4 | 6-6 | 2 | #4 | 6-6 | 2 | #4 | 7-3 | 2 | #4 | 7-6 | 2 | #4 | 8-6 | 2 | #4 | 8-6 | 2 | #4 | 9-0 |
| r5 | str | 2 | #4 | 3-3 | 2 | #4 | 3-3 | 2 | #4 | 3-6 | 2 | #4 | 4-6 | 2 | #4 | 4-6 | 2 | #4 | 5-3 | 2 | #4 | 5-3 | 2 | #4 | 6-6 | 2 | #4 | 6-6 | 2 | #4 | 7-0 |
| r6 | str | | | | | | | | | | 1 | #4 | 3-6 | 1 | #4 | 3-6 | 2 | #4 | 3-6 | 2 | #4 | 3-6 | 2 | #4 | 4-0 | 2 | #4 | 4-6 | 2 | #4 | 5-3 |
| r7 | str | | | | | | | | | | | | | | | | | | | | | | 1 | #4 | 3-6 | 1 | #4 | 3-6 | 2 | #4 | 3-6 |
| r8 | str | | | | | | | | | | | | | | | | | | | | | | | | | | | | | | |
| s | str | 34 | #4 | 3-0 | 35 | #4 | 3-0 | 37 | #4 | 3-0 | 39 | #4 | 3-0 | 41 | #4 | 3-0 | 43 | #4 | 3-0 | 44 | #4 | 3-0 | 47 | #4 | 3-0 | 48 | #4 | 3-0 | 50 | #4 | 3-0 |
| t1 | str | 2 | #4 | 9-6 | 2 | #4 | 10-0 | 2 | #4 | 10-6 | 2 | #4 | 11-0 | 2 | #4 | 11-6 | 2 | #4 | 12-0 | 2 | #4 | 12-6 | 2 | #4 | 13-0 | 2 | #4 | 13-6 | 2 | #4 | 14-0 |
| t2 | str | 2 | #4 | 12-0 | 2 | #4 | 12-6 | 2 | #4 | 13-0 | 2 | #4 | 13-6 | 2 | #4 | 14-0 | 2 | #4 | 14-6 | 2 | #4 | 15-0 | 2 | #4 | 15-6 | 2 | #4 | 16-0 | 2 | #4 | 16-6 |
| t3 | str | 2 | #4 | 14-6 | 2 | #4 | 15-0 | 2 | #4 | 15-6 | 2 | #4 | 16-0 | 2 | #4 | 16-6 | 2 | #4 | 17-0 | 2 | #4 | 17-6 | 2 | #4 | 18-0 | 2 | #4 | 18-6 | 2 | #4 | 19-0 |
| t4 | str | 2 | #4 | 16-9 | 2 | #4 | 17-6 | 2 | #4 | 18-0 | 2 | #4 | 18-6 | 2 | #4 | 19-0 | 2 | #4 | 19-6 | 2 | #4 | 20-0 | 2 | #4 | 20-6 | 2 | #4 | 21-0 | 2 | #4 | 21-6 |
| t5 | str | 1 | #4 | 19-0 | 2 | #4 | 19-9 | 2 | #4 | 20-6 | 2 | #4 | 21-0 | 2 | #4 | 21-6 | 2 | #4 | 22-0 | 2 | #4 | 22-6 | 2 | #4 | 23-0 | 2 | #4 | 23-6 | 2 | #4 | 24-0 |
| t6 | str | | | | | | | | | | 1 | #4 | 22-6 | 1 | #4 | 24-0 | 2 | #4 | 24-6 | 2 | #4 | 25-0 | 2 | #4 | 25-0 | 2 | #4 | 25-0 | 2 | #4 | 26-6 |
| t7 | str | | | | | | | | | | | | | | | | | | | | | | 1 | #4 | 25-6 | 1 | #4 | 27-6 | 1 | #4 | 29-0 |
| t8 | str | 2 | #4 | 12-0 | 2 | #4 | 9-0 | 2 | #4 | 14-0 | 2 | #4 | 11-0 | 2 | #4 | 14-9 | 2 | #4 | 11-9 | 2 | #4 | 15-9 | 2 | #4 | 14-0 | 2 | #4 | 17-0 | 2 | #4 | 18-3 |
| t9 | str | | | | | | | | | | | | | | | | | | | | | | | | | | | | | | |
| t10 | str | 1 | #4 | 20-0 | 1 | #4 | 21-3 | 1 | #4 | 22-3 | 1 | #4 | 23-6 | 1 | #4 | 24-6 | 1 | #4 | 26-0 | 1 | #4 | 27-0 | 1 | #4 | 28-3 | 1 | #4 | 29-3 | 1 | #4 | 30-3 |

## 15° SKEW

| Mark | Bend | 90" Dia | | | 96" Dia | | | 102" Dia | | | 108" Dia | | | 114" Dia | | | 120" Dia | | | 126" Dia | | | 132" Dia | | | 138" Dia | | | 144" Dia | | |
|---|---|---|---|---|---|---|---|---|---|---|---|---|---|---|---|---|---|---|---|---|---|---|---|---|---|---|---|---|---|---|---|
| | | No | Size | Lgth | No | Size | Lgth | No | Size | Lgth | No | Size | Lgth | No | Size | Lgth | No | Size | Lgth | No | Size | Lgth | No | Size | Lgth | No | Size | Lgth | No | Size | Lgth |
| h | C | 11 | #4 | 7-3 | 12 | #4 | 7-3 | 12 | #4 | 7-3 | 13 | #4 | 7-3 | 13 | #4 | 7-3 | 14 | #4 | 7-3 | 14 | #4 | 7-3 | 15 | #4 | 7-3 | 15 | #4 | 7-3 | 16 | #4 | 7-3 |
| j | str | 1 | #4 | 23-9 | 1 | #4 | 25-0 | 1 | #4 | 26-0 | 1 | #4 | 27-3 | 1 | #4 | 28-6 | 1 | #4 | 30-0 | 1 | #4 | 31-0 | 1 | #4 | 32-3 | 1 | #4 | 33-3 | 1 | #4 | 34-9 |
| r1 | str | 8 | #4 | 11-3 | 9 | #4 | 11-9 | 9 | #4 | 12-6 | 10 | #4 | 13-0 | 11 | #4 | 13-6 | 11 | #4 | 14-0 | 11 | #4 | 14-9 | 12 | #4 | 15-6 | 12 | #4 | 16-0 | 13 | #4 | 16-3 |
| r2 | str | 2 | #4 | 9-3 | 2 | #4 | 9-3 | 2 | #4 | 10-9 | 2 | #4 | 10-9 | 2 | #4 | 10-6 | 2 | #4 | 11-3 | 2 | #4 | 12-9 | 2 | #4 | 12-6 | 2 | #4 | 13-9 | 2 | #4 | 13-6 |
| r3 | str | 2 | #4 | 6-3 | 2 | #4 | 6-6 | 2 | #4 | 7-9 | 2 | #4 | 7-6 | 2 | #4 | 7-6 | 2 | #4 | 8-6 | 2 | #4 | 10-0 | 2 | #4 | 9-6 | 2 | #4 | 10-9 | 2 | #4 | 10-6 |
| r4 | str | 1 | #4 | 4-9 | 1 | #4 | 4-9 | 2 | #4 | 4-9 | 2 | #4 | 4-6 | 2 | #4 | 4-6 | 2 | #4 | 5-6 | 2 | #4 | 7-0 | 2 | #4 | 6-6 | 2 | #4 | 7-9 | 2 | #4 | 7-9 |
| r5 | str | | | | | | | | | | | | | | | | | | | 1 | #4 | 5-6 | 1 | #4 | 5-3 | 2 | #4 | 5-0 | 2 | #4 | 4-9 |
| r6 | str | | | | | | | | | | | | | | | | | | | | | | | | | | | | | | |
| r7 | str | | | | | | | | | | | | | | | | | | | | | | | | | | | | | | |
| s | str | 30 | #4 | 3-0 | 33 | #4 | 3-0 | 35 | #4 | 3-0 | 36 | #4 | 3-0 | 38 | #4 | 3-0 | 39 | #4 | 3-0 | 42 | #4 | 3-0 | 43 | #4 | 3-0 | 44 | #4 | 3-0 | 46 | #4 | 3-0 |
| t1 | str | 2 | #4 | 8-3 | 2 | #4 | 9-0 | 2 | #4 | 9-6 | 2 | #4 | 9-9 | 2 | #4 | 10-0 | 2 | #4 | 10-6 | 2 | #4 | 11-0 | 2 | #4 | 11-3 | 2 | #4 | 11-9 | 2 | #4 | 12-3 |
| t2 | str | 2 | #4 | 9-9 | 2 | #4 | 10-3 | 2 | #4 | 10-6 | 2 | #4 | 11-0 | 2 | #4 | 11-6 | 2 | #4 | 12-0 | 2 | #4 | 12-3 | 2 | #4 | 12-9 | 2 | #4 | 13-3 | 2 | #4 | 13-9 |
| t3 | str | 2 | #4 | 11-3 | 2 | #4 | 11-9 | 2 | #4 | 12-0 | 2 | #4 | 12-6 | 2 | #4 | 13-0 | 2 | #4 | 13-6 | 2 | #4 | 13-9 | 2 | #4 | 14-3 | 2 | #4 | 14-6 | 2 | #4 | 15-3 |
| t4 | str | 2 | #4 | 12-6 | 2 | #4 | 13-0 | 2 | #4 | 13-6 | 2 | #4 | 14-0 | 2 | #4 | 14-6 | 2 | #4 | 14-9 | 2 | #4 | 15-3 | 2 | #4 | 15-9 | 2 | #4 | 16-0 | 2 | #4 | 16-9 |
| t5 | str | 2 | #4 | 14-3 | 2 | #4 | 14-6 | 2 | #4 | 15-0 | 2 | #4 | 15-6 | 2 | #4 | 16-0 | 2 | #4 | 16-3 | 2 | #4 | 16-9 | 2 | #4 | 17-3 | 2 | #4 | 17-6 | 2 | #4 | 18-3 |
| t6 | str | | | | | | | 1 | #4 | 16-3 | 2 | #4 | 16-9 | 2 | #4 | 17-3 | 2 | #4 | 17-9 | 2 | #4 | 18-3 | 2 | #4 | 18-9 | 2 | #4 | 19-0 | 2 | #4 | 19-9 |
| t7 | str | | | | | | | | | | | | | | | | 1 | #4 | 19-3 | 2 | #4 | 19-9 | 2 | #4 | 20-3 | 2 | #4 | 20-6 | 2 | #4 | 21-3 |
| t8 | str | 2 | #4 | 9-3 | 2 | #4 | 11-3 | 2 | #4 | 8-9 | 2 | #4 | 9-9 | 2 | #4 | 14-3 | 2 | #4 | 9-9 | 2 | #4 | 9-0 | 2 | #4 | 9-6 | 2 | #4 | 15-6 | 2 | #4 | 17-9 |
| t9 | str | | | | | | | | | | | | | | | | | | | | | | | | | | | | | | |
| t10 | str | | | | | | | | | | | | | | | | | | | | | | | | | | | | | | |
| t11 | str | 1 | #4 | 16-0 | 1 | #4 | 16-9 | 1 | #4 | 17-9 | 1 | #4 | 18-6 | 1 | #4 | 19-6 | 1 | #4 | 20-3 | 1 | #4 | 21-0 | 1 | #4 | 22-0 | 1 | #4 | 22-9 | 1 | #4 | 24-0 |

## 45° SKEW

| Mark | Bend | 90" Dia | | | 96" Dia | | | 102" Dia | | | 108" Dia | | | 114" Dia | | | 120" Dia | | | 126" Dia | | | 132" Dia | | | 138" Dia | | | 144" Dia | | |
|---|---|---|---|---|---|---|---|---|---|---|---|---|---|---|---|---|---|---|---|---|---|---|---|---|---|---|---|---|---|---|---|
| | | No | Size | Lgth | No | Size | Lgth | No | Size | Lgth | No | Size | Lgth | No | Size | Lgth | No | Size | Lgth | No | Size | Lgth | No | Size | Lgth | No | Size | Lgth | No | Size | Lgth |
| h | C | 18 | #4 | 7-3 | 19 | #4 | 7-3 | 20 | #4 | 7-3 | 21 | #4 | 7-3 | 22 | #4 | 7-3 | 22 | #4 | 7-3 | 23 | #4 | 7-3 | 24 | #4 | 7-3 | 25 | #4 | 7-3 | 26 | #4 | 7-3 |
| j | str | 1 | #4 | 36-6 | 1 | #4 | 33-3 | 1 | #4 | 38-9 | 1 | #4 | 40-9 | 1 | #4 | 42-6 | 1 | #4 | 44-0 | 1 | #4 | 46-3 | 1 | #4 | 48-0 | 1 | #4 | 50-3 | 1 | #4 | 51-9 |
| r1 | str | 12 | #4 | 10-3 | 12 | #4 | 10-9 | 13 | #4 | 11-3 | 13 | #4 | 11-9 | 14 | #4 | 12-3 | 15 | #4 | 12-6 | 16 | #4 | 13-0 | 16 | #4 | 13-9 | 17 | #4 | 14-0 | 17 | #4 | 14-6 |
| r2 | str | 3 | #4 | 7-6 | 3 | #4 | 8-3 | 3 | #4 | 8-6 | 3 | #4 | 9-6 | 3 | #4 | 10-0 | 3 | #4 | 9-9 | 3 | #4 | 10-6 | 3 | #4 | 11-0 | 3 | #4 | 11-9 | 3 | #4 | 12-3 |
| r3 | str | 3 | #4 | 5-6 | 3 | #4 | 6-3 | 3 | #4 | 6-6 | 3 | #4 | 7-9 | 3 | #4 | 7-9 | 3 | #4 | 7-9 | 3 | #4 | 8-6 | 3 | #4 | 9-0 | 3 | #4 | 9-9 | 3 | #4 | 10-3 |
| r4 | str | 3 | #4 | 3-6 | 2 | #4 | 4-0 | 2 | #4 | 4-6 | 3 | #4 | 5-6 | 3 | #4 | 5-9 | 3 | #4 | 6-0 | 3 | #4 | 6-6 | 3 | #4 | 7-0 | 3 | #4 | 7-9 | 3 | #4 | 8-9 |
| r5 | str | | | | 2 | #4 | 3-0 | 2 | #4 | 3-6 | 2 | #4 | 4-0 | 3 | #4 | 4-0 | 3 | #4 | 4-0 | 2 | #4 | 4-0 | 2 | #4 | 5-0 | 3 | #4 | 5-9 | 3 | #4 | 6-3 |
| r6 | str | | | | | | | | | | | | | | | | | | | 2 | #4 | 3-0 | 2 | #4 | 4-0 | 3 | #4 | 3-9 | 3 | #4 | 4-3 |
| r7 | str | | | | | | | | | | | | | | | | | | | | | | | | | | | | | | |
| r8 | str | | | | | | | | | | | | | | | | | | | | | | | | | | | | | | |
| r9 | str | | | | | | | | | | | | | | | | | | | | | | | | | | | | | | |
| r10 | str | | | | | | | | | | | | | | | | | | | | | | | | | | | | | | |
| s | str | 39 | #4 | 3-0 | 40 | #4 | 3-0 | 42 | #4 | 3-0 | 45 | #4 | 3-0 | 47 | #4 | 3-0 | 48 | #4 | 3-0 | 50 | #4 | 3-0 | 52 | #4 | 3-0 | 54 | #4 | 3-0 | 56 | #4 | 3-0 |
| t1 | str | 2 | #4 | 12-0 | 2 | #4 | 12-6 | 2 | #4 | 13-0 | 2 | #4 | 13-6 | 2 | #4 | 14-6 | 2 | #4 | 15-0 | 2 | #4 | 15-6 | 2 | #4 | 16-0 | 2 | #4 | 16-9 | 2 | #4 | 17-6 |
| t2 | str | 2 | #4 | 16-3 | 2 | #4 | 16-9 | 2 | #4 | 17-3 | 2 | #4 | 17-9 | 2 | #4 | 18-9 | 2 | #4 | 19-3 | 2 | #4 | 19-9 | 2 | #4 | 20-0 | 2 | #4 | 21-0 | 2 | #4 | 22-0 |
| t3 | str | 2 | #4 | 20-6 | 2 | #4 | 21-0 | 2 | #4 | 21-6 | 2 | #4 | 22-0 | 2 | #4 | 23-0 | 2 | #4 | 23-6 | 2 | #4 | 24-0 | 2 | #4 | 24-3 | 2 | #4 | 25-6 | 2 | #4 | 26-3 |
| t4 | str | 2 | #4 | 23-3 | 2 | #4 | 24-0 | 2 | #4 | 24-9 | 2 | #4 | 26-0 | 2 | #4 | 27-0 | 2 | #4 | 27-9 | 2 | #4 | 28-6 | 2 | #4 | 28-6 | 2 | #4 | 29-9 | 2 | #4 | 30-6 |
| t5 | str | 2 | #4 | 12-0 | 2 | #4 | 16-0 | 2 | #4 | 17-0 | 2 | #4 | 21-0 | 2 | #4 | 21-0 | 2 | #4 | 26-0 | 2 | #4 | 27-6 | 2 | #4 | 32-0 | 2 | #4 | 33-0 | 2 | #4 | 34-0 |
| t6 | str | 2 | #4 | 6-0 | 2 | #4 | 7-0 | 2 | #4 | 8-6 | 2 | #4 | 12-6 | 2 | #4 | 14-0 | 2 | #4 | 17-3 | 2 | #4 | 19-0 | 2 | #4 | 23-0 | 2 | #4 | 26-9 | 2 | #4 | 30-0 |
| t7 | str | | | | | | | | | | 1 | #4 | 7-6 | 2 | #4 | 7-6 | 2 | #4 | 9-0 | 2 | #4 | 10-6 | 2 | #4 | 14-0 | 2 | #4 | 17-6 | 2 | #4 | 19-6 |
| t8 | str | | | | | | | | | | | | | | | | | | | | | | 1 | #4 | 10-0 | 2 | #4 | 9-0 | 2 | #4 | 11-0 |
| t9 | str | | | | | | | | | | | | | | | | | | | | | | | | | | | | | | |
| t10 | str | 1 | #4 | 26-0 | 1 | #4 | 27-6 | 1 | #4 | 28-9 | 1 | #4 | 30-0 | 1 | #4 | 31-6 | 1 | #4 | 32-9 | 1 | #4 | 34-6 | 1 | #4 | 35-9 | 1 | #4 | 37-6 | 1 | #4 | 38-9 |

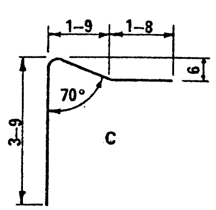


BEND

Registered Professional Engineer (Civil)
CERTIFICATE EXPIRES
RONALD NANCY BRECHLER
DEC. 31, 19....
ARIZONA, U.S.A.

| DESIGN APPROVED | ARIZONA DEPARTMENT OF TRANSPORTATION HIGHWAYS DIVISION STANDARD PLANS | REVISION |
|---|---|---|
| APPROVED FOR DISTRIBUTION | OUTLET APRON STEEL LIST 4:1 SLOPE | STANDARD NO. PH-22 PLAN NO. B-17.30 |

DESIGN K W 9-72 | DRAWN LAM 9-72 | CHECKED RLC 9-72

## RIGHT ANGLE

| Mark | Bend | 90" Dia | | | 96" Dia | | | 102" Dia | | | 108" Dia | | | 114" Dia | | | 120" Dia | | | 126" Dia | | | 132" Dia | | | 138" Dia | | | 144" Dia | | |
|---|---|---|---|---|---|---|---|---|---|---|---|---|---|---|---|---|---|---|---|---|---|---|---|---|---|---|---|---|---|---|---|
| | | No | Size | Lgth | No | Size | Lgth | No | Size | Lgth | No | Size | Lgth | No | Size | Lgth | No | Size | Lgth | No | Size | Lgth | No | Size | Lgth | No | Size | Lgth | No | Size | Lgth |
| h | C | 17 | #4 | 7-3 | 18 | #4 | 7-3 | 18 | #4 | 7-3 | 19 | #4 | 7-3 | 20 | #4 | 7-3 | 20 | #4 | 7-3 | 20 | #4 | 7-3 | 21 | #4 | 7-3 | 22 | #4 | 7-3 | 22 | #4 | 7-3 |
| j | str | 1 | #4 | 26-6 | 1 | #4 | 28-0 | 1 | #4 | 29-0 | 1 | #4 | 30-3 | 1 | #4 | 31-6 | 1 | #4 | 32-9 | 1 | #4 | 33-9 | 1 | #4 | 35-0 | 1 | #4 | 36-3 | 1 | #4 | 37-6 |
| r1 | str | 9 | #4 | 12-6 | 9 | #4 | 13-3 | 10 | #4 | 14-0 | 10 | #4 | 14-9 | 11 | #4 | 15-6 | 11 | #4 | 16-3 | 11 | #4 | 17-0 | 12 | #4 | 17-9 | 12 | #4 | 18-6 | 13 | #4 | 19-3 |
| r2 | str | 4 | #4 | 7-6 | 4 | #4 | 8-9 | 4 | #4 | 8-9 | 4 | #4 | 10-0 | 4 | #4 | 10-9 | 4 | #4 | 12-0 | 4 | #4 | 12-0 | 4 | #4 | 12-0 | 4 | #4 | 13-6 | 4 | #4 | 13-3 |
| r3 | str | 2 | #4 | 5-0 | 2 | #4 | 6-0 | 2 | #4 | 6-0 | 4 | #4 | 4-6 | 4 | #4 | 4-3 | 4 | #4 | 6-9 | 4 | #4 | 6-9 | 4 | #4 | 6-9 | 4 | #4 | 8-0 | 4 | #4 | 7-9 |
| r4 | str | | | | | | | | | | | | | | | | | | | | | | | | | 2 | #4 | 5-3 | 2 | #4 | 4-9 |
| s | str | 34 | #4 | 2-0 | 36 | #4 | 2-0 | 39 | #4 | 2-0 | 41 | #4 | 2-6 | 42 | #4 | 2-6 | 44 | #4 | 2-6 | 47 | #4 | 2-6 | 47 | #4 | 3-0 | 48 | #4 | 3-0 | 50 | #4 | 3-0 |
| t1 | str | 3 | #4 | 8-0 | 3 | #4 | 8-9 | 3 | #4 | 9-3 | 3 | #4 | 9-6 | 3 | #4 | 10-0 | 3 | #4 | 10-0 | 3 | #4 | 10-9 | 3 | #4 | 11-3 | 3 | #4 | 11-9 | 3 | #4 | 12-0 |
| t2 | str | 3 | #4 | 10-6 | 3 | #4 | 11-0 | 3 | #4 | 11-9 | 3 | #4 | 11-9 | 3 | #4 | 12-3 | 3 | #4 | 13-0 | 3 | #4 | 13-0 | 3 | #4 | 13-6 | 3 | #4 | 14-0 | 3 | #4 | 14-0 |
| t3 | str | 3 | #4 | 12-9 | 3 | #4 | 13-0 | 3 | #4 | 13-9 | 3 | #4 | 14-0 | 3 | #4 | 14-6 | 3 | #4 | 15-3 | 3 | #4 | 15-3 | 3 | #4 | 15-9 | 3 | #4 | 16-6 | 3 | #4 | 17-0 |
| t4 | str | 3 | #4 | 15-0 | 3 | #4 | 15-6 | 3 | #4 | 16-0 | 3 | #4 | 16-3 | 3 | #4 | 16-6 | 3 | #4 | 17-6 | 3 | #4 | 17-9 | 3 | #4 | 18-0 | 3 | #4 | 18-6 | 3 | #4 | 19-0 |
| t5 | str | 2 | #4 | 17-0 | 2 | #4 | 17-6 | 3 | #4 | 18-0 | 2 | #4 | 18-6 | 2 | #4 | 19-0 | 3 | #4 | 19-6 | 3 | #4 | 20-0 | 3 | #4 | 20-0 | 3 | #4 | 20-6 | 3 | #4 | 20-9 |
| t6 | str | | | | | | | | | | 2 | #4 | 20-0 | 2 | #4 | 20-6 | 2 | #4 | 21-6 | 3 | #4 | 22-0 | 3 | #4 | 22-3 | 2 | #4 | 22-9 | 3 | #4 | 23-0 |
| t7 | str | | | | | | | | | | | | | | | | | | | | | | | | | 2 | #4 | 24-3 | 2 | #4 | 25-0 |

## 30° SKEW

| Mark | Bend | 90" Dia | | | 96" Dia | | | 102" Dia | | | 108" Dia | | | 114" Dia | | | 120" Dia | | | 126" Dia | | | 132" Dia | | | 138" Dia | | | 144" Dia | | |
|---|---|---|---|---|---|---|---|---|---|---|---|---|---|---|---|---|---|---|---|---|---|---|---|---|---|---|---|---|---|---|---|
| | | No | Size | Lgth | No | Size | Lgth | No | Size | Lgth | No | Size | Lgth | No | Size | Lgth | No | Size | Lgth | No | Size | Lgth | No | Size | Lgth | No | Size | Lgth | No | Size | Lgth |
| h | C | 17 | #4 | 7-3 | 18 | #4 | 7-3 | 18 | #4 | 7-3 | 19 | #4 | 7-3 | 20 | #4 | 7-3 | 20 | #4 | 7-3 | 21 | #4 | 7-3 | 22 | #4 | 7-3 | 22 | #4 | 7-3 | 23 | #4 | 7-3 |
| j | str | 1 | #4 | 32-0 | 1 | #4 | 33-6 | 1 | #4 | 34-0 | 1 | #4 | 36-6 | 1 | #4 | 38-0 | 1 | #4 | 39-0 | 1 | #4 | 40-0 | 1 | #4 | 41-0 | 1 | #4 | 42-0 | 1 | #4 | 43-0 |
| r1 | str | 10 | #4 | 12-9 | 11 | #4 | 13-3 | 11 | #4 | 14-0 | 12 | #4 | 14-9 | 12 | #4 | 15-6 | 12 | #4 | 16-0 | 13 | #4 | 16-6 | 13 | #4 | 17-6 | 14 | #4 | 18-0 | 14 | #4 | 18-3 |
| r2 | str | 2 | #4 | 11-3 | 2 | #4 | 11-6 | 2 | #4 | 12-3 | 2 | #4 | 13-0 | 2 | #4 | 14-0 | 2 | #4 | 14-9 | 2 | #4 | 14-9 | 2 | #4 | 16-0 | 2 | #4 | 16-0 | 2 | #4 | 17-0 |
| r3 | str | 2 | #4 | 9-6 | 2 | #4 | 9-6 | 2 | #4 | 10-3 | 2 | #4 | 11-0 | 2 | #4 | 12-0 | 2 | #4 | 12-9 | 2 | #4 | 13-0 | 2 | #4 | 14-0 | 2 | #4 | 14-0 | 2 | #4 | 15-3 |
| r4 | str | 2 | #4 | 7-0 | 2 | #4 | 7-9 | 2 | #4 | 8-6 | 2 | #4 | 9-0 | 2 | #4 | 10-3 | 2 | #4 | 10-9 | 2 | #4 | 11-0 | 2 | #4 | 12-0 | 2 | #4 | 12-0 | 2 | #4 | 13-3 |
| r5 | str | 2 | #4 | 5-3 | 2 | #4 | 6-0 | 2 | #4 | 6-6 | 2 | #4 | 7-3 | 2 | #4 | 8-3 | 2 | #4 | 9-0 | 2 | #4 | 9-0 | 2 | #4 | 10-0 | 2 | #4 | 10-0 | 2 | #4 | 11-3 |
| r6 | str | 1 | #4 | 4-9 | 2 | #4 | 4-0 | 2 | #4 | 4-9 | 2 | #4 | 5-3 | 2 | #4 | 6-3 | 2 | #4 | 7-0 | 2 | #4 | 7-0 | 2 | #4 | 8-0 | 2 | #4 | 8-0 | 2 | #4 | 9-3 |
| r7 | str | | | | | | | | | | 1 | #4 | 4-3 | 2 | #4 | 4-6 | 2 | #4 | 5-0 | 2 | #4 | 5-0 | 2 | #4 | 6-3 | 2 | #4 | 6-0 | 2 | #4 | 7-6 |
| r8 | str | | | | | | | | | | | | | | | | 1 | #4 | 4-0 | | | | 2 | #4 | 4-3 | 2 | #4 | 4-0 | 2 | #4 | 5-6 |
| s | str | 40 | #4 | 3-0 | 42 | #4 | 3-0 | 44 | #4 | 3-0 | 45 | #4 | 3-0 | 47 | #4 | 3-0 | 49 | #4 | 3-0 | 51 | #4 | 3-0 | 52 | #4 | 3-0 | 54 | #4 | 3-0 | 56 | #4 | 3-0 |
| t1 | str | 2 | #4 | 9-6 | 2 | #4 | 10-0 | 2 | #4 | 10-6 | 2 | #4 | 11-0 | 2 | #4 | 11-6 | 2 | #4 | 12-0 | 2 | #4 | 12-6 | 2 | #4 | 13-0 | 2 | #4 | 13-0 | 2 | #4 | 14-0 |
| t2 | str | 2 | #4 | 12-0 | 2 | #4 | 12-6 | 2 | #4 | 13-0 | 2 | #4 | 13-6 | 2 | #4 | 14-0 | 2 | #4 | 14-6 | 2 | #4 | 15-0 | 2 | #4 | 15-6 | 2 | #4 | 15-6 | 2 | #4 | 16-6 |
| t3 | str | 2 | #4 | 14-6 | 2 | #4 | 15-0 | 2 | #4 | 15-6 | 2 | #4 | 16-0 | 2 | #4 | 16-6 | 2 | #4 | 17-0 | 2 | #4 | 17-6 | 2 | #4 | 18-0 | 2 | #4 | 18-0 | 2 | #4 | 19-0 |
| t4 | str | 2 | #4 | 17-0 | 2 | #4 | 17-6 | 2 | #4 | 18-0 | 2 | #4 | 18-6 | 2 | #4 | 19-0 | 2 | #4 | 19-6 | 2 | #4 | 20-0 | 2 | #4 | 20-6 | 2 | #4 | 20-3 | 2 | #4 | 21-6 |
| t5 | str | 2 | #4 | 19-6 | 2 | #4 | 20-0 | 2 | #4 | 20-0 | 2 | #4 | 21-0 | 2 | #4 | 21-6 | 2 | #4 | 22-0 | 2 | #4 | 22-6 | 2 | #4 | 22-9 | 2 | #4 | 22-9 | 2 | #4 | 24-0 |
| t6 | str | 1 | #4 | 22-0 | 2 | #4 | 22-0 | 2 | #4 | 23-0 | 2 | #4 | 23-0 | 2 | #4 | 24-0 | 2 | #4 | 24-6 | 2 | #4 | 25-0 | 2 | #4 | 25-0 | 2 | #4 | 25-0 | 2 | #4 | 26-6 |
| t7 | str | | | | | | | | | | 1 | #4 | 26-0 | 2 | #4 | 26-0 | 2 | #4 | 26-6 | 2 | #4 | 27-0 | 2 | #4 | 27-6 | 2 | #4 | 27-6 | 2 | #4 | 29-0 |
| t8 | str | | | | | | | | | | | | | | | | | | | 1 | #4 | 28-6 | 2 | #4 | 27-0 | 2 | #4 | 30-0 | 2 | #4 | 30-6 |
| t9 | str | 2 | #4 | 12-0 | 2 | #4 | 12-0 | 2 | #4 | 14-3 | 2 | #4 | 12-6 | 2 | #4 | 12-9 | 2 | #4 | 15-0 | 2 | #4 | 13-3 | 2 | #4 | 13-0 | 2 | #4 | 14-0 | 2 | #4 | 20-6 |
| t10 | str | 1 | #4 | 23-9 | 1 | #4 | 24-0 | 1 | #4 | 25-9 | 1 | #4 | 26-9 | 1 | #4 | 28-0 | 1 | #4 | 29-0 | 1 | #4 | 30-0 | 1 | #4 | 31-0 | 1 | #4 | 32-0 | 1 | #4 | 33-0 |

## 15° SKEW

| Mark | Bend | 90" Dia | | | 96" Dia | | | 102" Dia | | | 108" Dia | | | 114" Dia | | | 120" Dia | | | 126" Dia | | | 132" Dia | | | 138" Dia | | | 144" Dia | | |
|---|---|---|---|---|---|---|---|---|---|---|---|---|---|---|---|---|---|---|---|---|---|---|---|---|---|---|---|---|---|---|---|
| | | No | Size | Lgth | No | Size | Lgth | No | Size | Lgth | No | Size | Lgth | No | Size | Lgth | No | Size | Lgth | No | Size | Lgth | No | Size | Lgth | No | Size | Lgth | No | Size | Lgth |
| h | C | 13 | #4 | 7-3 | 13 | #4 | 7-3 | 14 | #4 | 7-3 | 15 | #4 | 7-3 | 15 | #4 | 7-3 | 16 | #4 | 7-3 | 16 | #4 | 7-3 | 17 | #4 | 7-3 | 18 | #4 | 7-3 | 19 | #4 | 7-3 |
| j | str | 1 | #4 | 25-9 | 1 | #4 | 27-0 | 1 | #4 | 28-3 | 1 | #4 | 29-9 | 1 | #4 | 31-0 | 1 | #4 | 32-3 | 1 | #4 | 33-6 | 1 | #4 | 34-6 | 1 | #4 | 36-3 | 1 | #4 | 37-9 |
| r1 | str | 9 | #4 | 13-3 | 9 | #4 | 14-0 | 10 | #4 | 14-9 | 10 | #4 | 15-6 | 11 | #4 | 16-0 | 11 | #4 | 16-9 | 12 | #4 | 17-6 | 12 | #4 | 18-3 | 12 | #4 | 19-0 | 13 | #4 | 19-9 |
| r2 | str | 2 | #4 | 11-0 | 2 | #4 | 12-0 | 2 | #4 | 11-6 | 2 | #4 | 13-0 | 2 | #4 | 12-9 | 2 | #4 | 14-0 | 2 | #4 | 14-6 | 2 | #4 | 15-6 | 2 | #4 | 17-0 | 2 | #4 | 17-0 |
| r3 | str | 2 | #4 | 7-6 | 2 | #4 | 9-0 | 2 | #4 | 8-6 | 2 | #4 | 10-0 | 2 | #4 | 10-0 | 2 | #4 | 11-6 | 2 | #4 | 12-0 | 2 | #4 | 12-6 | 2 | #4 | 14-0 | 2 | #4 | 14-0 |
| r4 | str | 2 | #4 | 5-0 | 2 | #4 | 6-0 | 2 | #4 | 6-0 | 2 | #4 | 7-6 | 2 | #4 | 7-0 | 2 | #4 | 8-6 | 2 | #4 | 8-6 | 2 | #4 | 9-6 | 2 | #4 | 11-6 | 2 | #4 | 11-6 |
| r5 | str | | | | 2 | #4 | 4-0 | 1 | #4 | 4-6 | 2 | #4 | 5-0 | 2 | #4 | 4-0 | 2 | #4 | 6-0 | 2 | #4 | 5-0 | 2 | #4 | 7-0 | 2 | #4 | 8-6 | 2 | #4 | 8-6 |
| r6 | str | | | | | | | | | | | | | | | | | | | | | | 1 | #4 | 5-0 | 2 | #4 | 5-6 | 2 | #4 | 5-6 |
| r7 | str | | | | | | | | | | | | | | | | | | | | | | | | | | | | 1 | #4 | 4-0 |
| s | str | 36 | #4 | 3-0 | 38 | #4 | 3-0 | 41 | #4 | 3-0 | 42 | #4 | 3-0 | 44 | #4 | 3-0 | 47 | #4 | 3-0 | 49 | #4 | 3-0 | 51 | #4 | 3-0 | 53 | #4 | 3-0 | 55 | #4 | 3-0 |
| t1 | str | 2 | #4 | 8-6 | 2 | #4 | 9-0 | 2 | #4 | 9-3 | 2 | #4 | 9-6 | 2 | #4 | 9-9 | 2 | #4 | 10-3 | 2 | #4 | 11-0 | 2 | #4 | 11-3 | 2 | #4 | 11-9 | 2 | #4 | 12-3 |
| t2 | str | 2 | #4 | 10-0 | 2 | #4 | 10-6 | 2 | #4 | 11-0 | 2 | #4 | 11-3 | 2 | #4 | 11-6 | 2 | #4 | 12-0 | 2 | #4 | 12-6 | 2 | #4 | 13-0 | 2 | #4 | 13-6 | 2 | #4 | 14-0 |
| t3 | str | 2 | #4 | 11-3 | 2 | #4 | 11-9 | 2 | #4 | 12-3 | 2 | #4 | 12-6 | 2 | #4 | 13-0 | 2 | #4 | 13-6 | 2 | #4 | 14-0 | 2 | #4 | 14-6 | 2 | #4 | 15-0 | 2 | #4 | 15-3 |
| t4 | str | 2 | #4 | 13-0 | 2 | #4 | 13-0 | 2 | #4 | 13-6 | 2 | #4 | 14-3 | 2 | #4 | 14-6 | 2 | #4 | 15-0 | 2 | #4 | 15-6 | 2 | #4 | 16-0 | 2 | #4 | 16-6 | 2 | #4 | 16-9 |
| t5 | str | 2 | #4 | 14-3 | 2 | #4 | 14-6 | 2 | #4 | 15-0 | 2 | #4 | 15-9 | 2 | #4 | 16-0 | 2 | #4 | 16-6 | 2 | #4 | 17-0 | 2 | #4 | 17-6 | 2 | #4 | 18-0 | 2 | #4 | 18-3 |
| t6 | str | 2 | #4 | 15-6 | 2 | #4 | 16-0 | 2 | #4 | 16-6 | 2 | #4 | 17-0 | 2 | #4 | 17-6 | 2 | #4 | 18-0 | 2 | #4 | 18-3 | 2 | #4 | 18-9 | 2 | #4 | 19-3 | 2 | #4 | 19-9 |
| t7 | str | 1 | #4 | 17-0 | 2 | #4 | 17-6 | 2 | #4 | 18-0 | 2 | #4 | 18-6 | 2 | #4 | 19-0 | 2 | #4 | 19-0 | 2 | #4 | 19-6 | 2 | #4 | 20-0 | 2 | #4 | 20-6 | 2 | #4 | 21-3 |
| t8 | str | 1 | #4 | 9-0 | | | | 1 | #4 | 15-6 | 1 | #4 | 20-0 | 2 | #4 | 20-0 | 2 | #4 | 20-6 | 2 | #4 | 21-0 | 2 | #4 | 21-6 | 2 | #4 | 22-0 | 2 | #4 | 22-6 |
| t9 | str | | | | | | | | | | 1 | #4 | 14-0 | | | | 1 | #4 | 22-0 | 2 | #4 | 22-6 | 2 | #4 | 22-6 | 2 | #4 | 23-6 | 2 | #4 | 24-0 |
| t10 | str | | | | | | | | | | | | | | | | | | | | | | 1 | #4 | 24-0 | 1 | #4 | 25-0 | 2 | #4 | 25-6 |
| t11 | str | 1 | #4 | 17-3 | 1 | #4 | 18-3 | 1 | #4 | 19-3 | 1 | #4 | 20-6 | 1 | #4 | 21-6 | 1 | #4 | 22-3 | 1 | #4 | 23-0 | 1 | #4 | 24-3 | 1 | #4 | 25-3 | 1 | #4 | 26-6 |

## 45° SKEW

| Mark | Bend | 90" Dia. | | | 96" Dia. | | | 102" Dia | | | 108" Dia | | | 114" Dia | | | 120" Dia | | | 126" Dia. | | | 132" Dia. | | | 138" Dia. | | | 144" Dia | | |
|---|---|---|---|---|---|---|---|---|---|---|---|---|---|---|---|---|---|---|---|---|---|---|---|---|---|---|---|---|---|---|---|
| | | No | Size | Lgth | No | Size | Lgth | No | Size | Lgth | No | Size | Lgth | No | Size | Lgth | No | Size | Lgth | No | Size | Lgth | No | Size | Lgth | No | Size | Lgth | No | Size | Lgth |
| h | C | 20 | #4 | 7-3 | 21 | #4 | 7-3 | 22 | #4 | 7-3 | 23 | #4 | 7-3 | 24 | #4 | 7-3 | 25 | #4 | 7-3 | 26 | #4 | 7-3 | 27 | #4 | 7-3 | 28 | #4 | 7-3 | 29 | #4 | 7-3 |
| j | str | 1 | #4 | 39-0 | 1 | #4 | 41-0 | 1 | #4 | 43-0 | 1 | #4 | 45-0 | 1 | #4 | 47-0 | 1 | #4 | 49-0 | 1 | #4 | 51-0 | 1 | #4 | 53-0 | 1 | #4 | 55-0 | 1 | #4 | 57-0 |
| r1 | str | 12 | #4 | 11-6 | 13 | #4 | 11-9 | 13 | #4 | 12-9 | 14 | #4 | 13-6 | 15 | #4 | 14-0 | 15 | #4 | 14-9 | 16 | #4 | 15-3 | 16 | #4 | 16-0 | 17 | #4 | 16-6 | 17 | #4 | 17-0 |
| r2 | str | 2 | #4 | 9-9 | 2 | #4 | 10-6 | 2 | #4 | 11-6 | 2 | #4 | 11-9 | 2 | #4 | 12-0 | 2 | #4 | 13-0 | 2 | #4 | 13-6 | 2 | #4 | 14-3 | 2 | #4 | 14-6 | 2 | #4 | 15-3 |
| r3 | str | 2 | #4 | 8-6 | 2 | #4 | 9-0 | 2 | #4 | 10-0 | 2 | #4 | 10-3 | 2 | #4 | 10-6 | 2 | #4 | 11-6 | 2 | #4 | 12-0 | 2 | #4 | 13-0 | 2 | #4 | 13-3 | 2 | #4 | 14-0 |
| r4 | str | 2 | #4 | 7-3 | 2 | #4 | 7-6 | 2 | #4 | 8-9 | 2 | #4 | 9-0 | 2 | #4 | 9-3 | 2 | #4 | 10-3 | 2 | #4 | 10-6 | 2 | #4 | 11-6 | 2 | #4 | 11-9 | 2 | #4 | 12-6 |
| r5 | str | 2 | #4 | 6-0 | 2 | #4 | 6-3 | 2 | #4 | 7-3 | 2 | #4 | 7-6 | 2 | #4 | 7-9 | 2 | #4 | 9-0 | 2 | #4 | 9-3 | 2 | #4 | 10-3 | 2 | #4 | 10-6 | 2 | #4 | 11-0 |
| r6 | str | 2 | #4 | 4-6 | 2 | #4 | 4-9 | 2 | #4 | 6-0 | 2 | #4 | 6-0 | 2 | #4 | 6-6 | 2 | #4 | 7-6 | 2 | #4 | 7-9 | 2 | #4 | 8-6 | 2 | #4 | 9-0 | 2 | #4 | 9-9 |
| r7 | str | | | | 1 | #4 | 4-0 | 2 | #4 | 4-6 | 2 | #4 | 4-6 | 2 | #4 | 5-0 | 2 | #4 | 6-0 | 2 | #4 | 6-3 | 2 | #4 | 7-3 | 2 | #4 | 7-6 | 2 | #4 | 8-3 |
| r8 | str | | | | | | | | | | | | | 2 | #4 | 3-6 | 2 | #4 | 4-6 | 2 | #4 | 5-0 | 2 | #4 | 6-0 | 2 | #4 | 6-3 | 2 | #4 | 6-9 |
| r9 | str | | | | | | | | | | | | | | | | 1 | #4 | 4-0 | 1 | #4 | 4-3 | 2 | #4 | 4-6 | 2 | #4 | 4-9 | 2 | #4 | 5-6 |
| r10 | str | | | | | | | | | | | | | | | | | | | | | | | | | 1 | #4 | 4-0 | 2 | #4 | 4-0 |
| s | str | 41 | #4 | 3-0 | 43 | #4 | 3-0 | 45 | #4 | 3-0 | 47 | #4 | 3-0 | 49 | #4 | 3-0 | 52 | #4 | 3-0 | 54 | #4 | 3-0 | 56 | #4 | 3-0 | 58 | #4 | 3-0 | 60 | #4 | 3-0 |
| t1 | str | 2 | #4 | 12-0 | 2 | #4 | 12-6 | 2 | #4 | 13-6 | 2 | #4 | 14-0 | 2 | #4 | 14-9 | 2 | #4 | 15-3 | 2 | #4 | 15-9 | 2 | #4 | 16-3 | 2 | #4 | 17-0 | 2 | #4 | 17-3 |
| t2 | str | 2 | #4 | 16-3 | 2 | #4 | 16-9 | 2 | #4 | 17-6 | 2 | #4 | 18-3 | 2 | #4 | 19-0 | 2 | #4 | 19-6 | 2 | #4 | 20-0 | 2 | #4 | 20-6 | 2 | #4 | 21-3 | 2 | #4 | 21-9 |
| t3 | str | 2 | #4 | 20-6 | 2 | #4 | 21-0 | 2 | #4 | 21-9 | 2 | #4 | 22-6 | 2 | #4 | 23-6 | 2 | #4 | 23-9 | 2 | #4 | 24-3 | 2 | #4 | 24-6 | 2 | #4 | 25-6 | 2 | #4 | 26-3 |
| t4 | str | 2 | #4 | 25-0 | 2 | #4 | 25-9 | 2 | #4 | 26-0 | 2 | #4 | 26-9 | 2 | #4 | 27-9 | 2 | #4 | 28-0 | 2 | #4 | 28-6 | 2 | #4 | 29-0 | 2 | #4 | 29-9 | 2 | #4 | 30-6 |
| t5 | str | 2 | #4 | 17-6 | 2 | #4 | 22-6 | 2 | #4 | 25-0 | 2 | #4 | 28-0 | 2 | #4 | 31-0 | 2 | #4 | 32-6 | 2 | #4 | 32-9 | 2 | #4 | 33-6 | 2 | #4 | 34-6 | 2 | #4 | 35-0 |
| t6 | str | 2 | #4 | 10-6 | 2 | #4 | 14-6 | 2 | #4 | 16-6 | 2 | #4 | 20-0 | 2 | #4 | 21-0 | 2 | #4 | 25-3 | 2 | #4 | 26-0 | 2 | #4 | 31-9 | 2 | #4 | 33-0 | 2 | #4 | 38-0 |
| t7 | str | 1 | #4 | 7-0 | 1 | #4 | 10-0 | 2 | #4 | 9-6 | 2 | #4 | 11-6 | 2 | #4 | 13-0 | 2 | #4 | 17-3 | 2 | #4 | 18-6 | 2 | #4 | 23-3 | 2 | #4 | 24-0 | 2 | #4 | 28-0 |
| t8 | str | | | | | | | | | | 1 | #4 | 7-6 | 1 | #4 | 8-6 | 2 | #4 | 9-3 | 2 | #4 | 10-0 | 2 | #4 | 15-6 | 2 | #4 | 15-6 | 2 | #4 | 20-0 |
| t9 | str | | | | | | | | | | | | | | | | | | | | | | 1 | #4 | 11-6 | 1 | #4 | 11-0 | 2 | #4 | 12-6 |
| t10 | str | 1 | #4 | 28-6 | 1 | #4 | 30-0 | 1 | #4 | 31-6 | 1 | #4 | 33-0 | 1 | #4 | 34-6 | 1 | #4 | 36-0 | 1 | #4 | 37-6 | 1 | #4 | 39-0 | 1 | #4 | 40-0 | 1 | #4 | 42-0 |

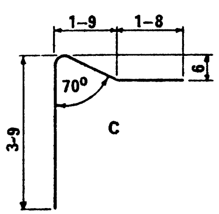


BEND

Registered Professional Engineer (Civil)
CERTIFICATE EXPIRES
RONALD CLANCY BRECHLER
DEC. 31, 19
ARIZONA, U.S.A.

| DESIGN APPROVED | ARIZONA DEPARTMENT OF TRANSPORTATION HIGHWAYS DIVISION STANDARD PLANS | REVISION |
|---|---|---|
| APPROVED FOR DISTRIBUTION | OUTLET APRON STEEL LIST 6:1 SLOPE | STANDARD NO. PH-23 PLAN NO. B-17.40 |

DESIGN KW 9-72 DRAWN LAM 9-72 CHECKED RLC 9-72

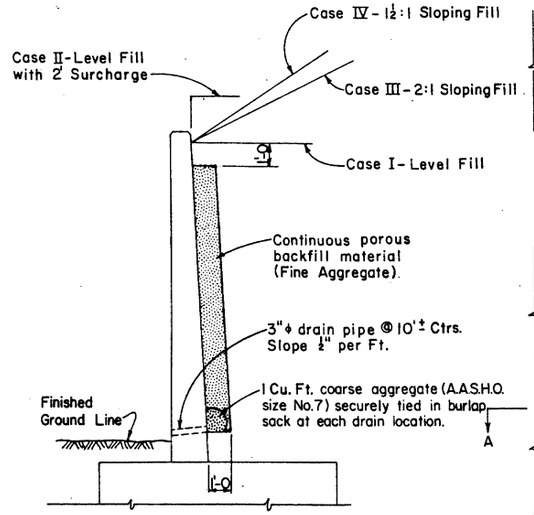


TYPICAL SECTION

Showing Design Cases & Drainage

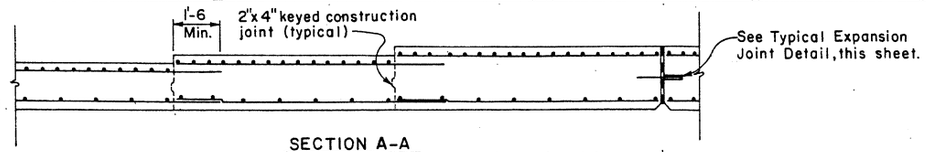


SECTION A-A

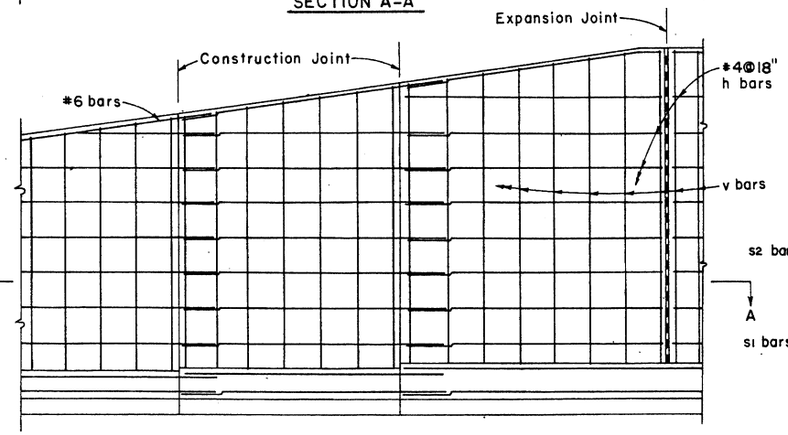


TYPICAL ELEVATION

Outside Face Reinforcing

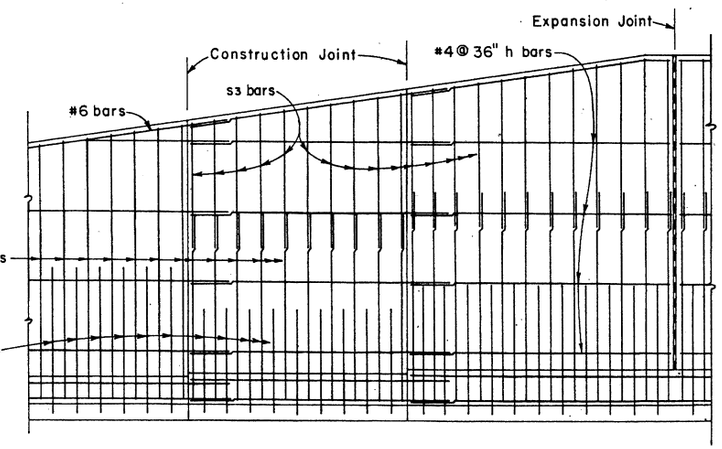


TYPICAL ELEVATION

Inside Face Reinforcing

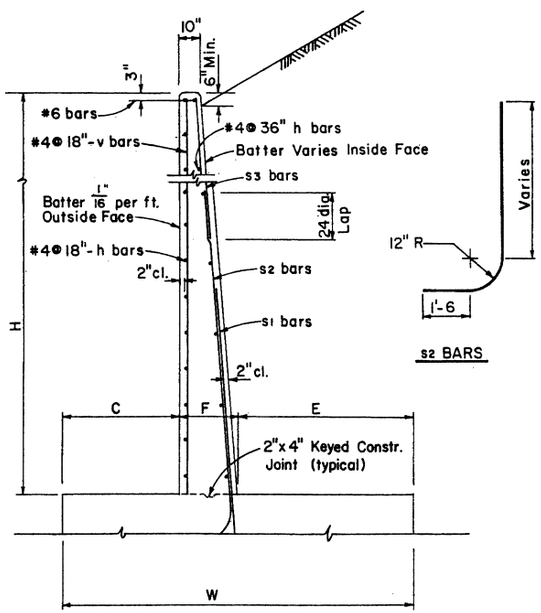


TYPICAL STEM DETAIL

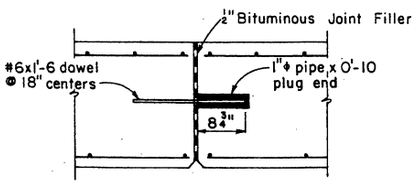


TYPICAL EXPANSION JOINT DETAIL

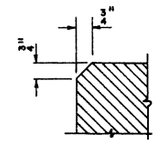


Chamfer all exposed corners thus unless otherwise noted.

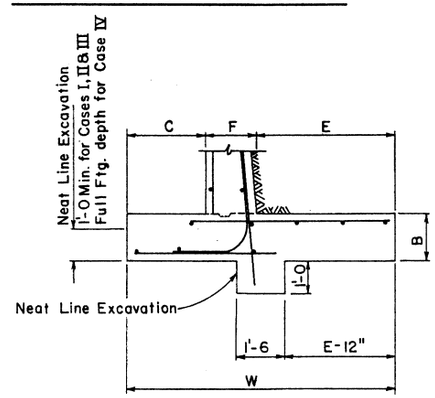


SPREAD FOOTING DETAIL

See Footing Steel Detail on B-18.20

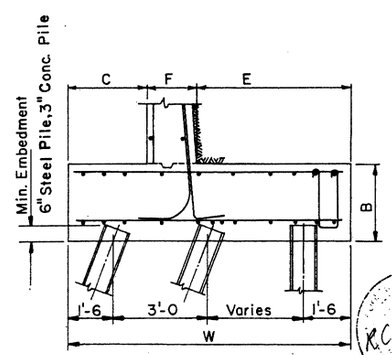


PILE FOOTING DETAIL

See Footing Steel Detail on B-18.30 or B-18.40

## GENERAL NOTES

Construction - Std. Specs. Arizona Highway Department Edition of 1969, revised to date.
Design - A.A.S.H.O. Std. Specs. for Highway Bridges 1977.

Dead Load - Weight of backfill = 120 P.C.F.
Equivalent Fluid Pressure = 35 P.C.F.
Stresses - Class A Concrete fc = 1000 P.S.I.
Reinforcing Steel fs = 20,000 P.S.I.
All Concrete shall be Class A.
Reinforcing Steel shall conform to A.S.T.M. Spec. A-615, Grade 40.
All Reinforcing Steel shall have 2" clear cover unless noted otherwise.

## JOINT NOTE

All Retaining Walls shall have Construction Joints spaced at not more than 30'-0 apart or as shown. Reinforcing Steel shall project through the joint.
Expansion Joints shall be provided at intervals not exceeding 90'-0.
Footings may be continuous with no joint.

## BATTERED PILE NOTE

Batter Piles 3:12 for Cases I & II, 4:12 for Cases III & IV.

| DESIGN | DHY | 9-72 | NO. | DESCRIPTION OF REVISIONS | MADE BY | DATE |
|---|---|---|---|---|---|---|
| DRAWN | GFB | 2-73 | ① | | | |
| CHECKED | NAB | 3-73 | ② | | | |
| | | | ③ | | | |

| DESIGN APPROVED | ARIZONA DEPARTMENT OF TRANSPORTATION HIGHWAYS DIVISION STANDARD PLANS | REVISION |
|---|---|---|
| K.C. Brechler | | |
| APPROVED FOR DISTRIBUTION | CANTILEVER RETAINING WALL DETAILS | STANDARD NO. RW-1 |
| | | PLAN NO. B-18.10 |

## CASE I - LEVEL FILL

| Dimensions | | | | | | Steel List | | | | | | | | | | | | | | | | | | | Quantities | | Max. Toe Press. Lbs. / Sq. Ft. |
|---|---|---|---|---|---|---|---|---|---|---|---|---|---|---|---|---|---|---|---|---|---|---|---|---|---|---|---|
| | | | | | | s1 | | | s2 | | | s3 | | | h | v | b | | | f1 | t | | | f2 | | | |
| H | W | B | C | F | E | Size | Spacing | Length | Size | Spacing | Length | Size | Spacing | Length | Number ⊕ | Length | Size | Spacing | Length | Number ⊕ | Size | Spacing | Length | Number ⊕ | Concrete Cu. Yds. / Lin. Ft. | Steel Lbs. / Lin. Ft. | |
| 4' | 2'-9 | 1'-3 | 0'-9 | 1'-0 | 1'-0 | #5 | 12" | 5'-9 | | | | | | | 3 | 3'-9 | #5 | 12" | 2'-0 | 2 | #5 | 12" | 2'-3 | 3 | .319 | 20.45 | 980 |
| 5' | 3'-0 | 1'-3 | 1'-0 | 1'-0 | 1'-0 | #5 | 12" | 6'-9 | | | | | | | 4 | 4'-9 | #5 | 12" | 2'-3 | 2 | #5 | 12" | 2'-3 | 3 | .364 | 22.87 | 1190 |
| 6' | 3'-3 | 1'-3 | 1'-1 | 1'-0 | 1'-2 | #5 | 12" | 7'-9 | | | | | | | 5 | 5'-9 | #5 | 12" | 2'-6 | 2 | #5 | 12" | 2'-6 | 3 | .410 | 25.54 | 1510 |
| 7' | 3'-9 | 1'-3 | 1'-3 | 1'-0 | 1'-6 | #5 | 12" | 8'-9 | | | | | | | 6 | 6'-9 | #5 | 12" | 2'-6 | 2 | #5 | 12" | 2'-9 | 3 | .467 | 27.96 | 1650 |
| 8' | 4'-3 | 1'-3 | 1'-5 | 1'-0 | 1'-10 | #5 | 12" | 9'-9 | | | | | | | 7 | 7'-9 | #5 | 12" | 2'-9 | 3 | #5 | 12" | 3'-3 | 3 | .524 | 31.57 | 1790 |
| 9' | 4'-9 | 1'-3 | 1'-7 | 1'-0 | 2'-2 | #5 | 12" | 10'-9 | | | | | | | 8 | 8'-9 | #5 | 12" | 3'-0 | 3 | #5 | 12" | 3'-6 | 3 | .581 | 34.24 | 1930 |
| 10' | 5'-3 | 1'-3 | 1'-9 | 1'-0 | 2'-6 | #6 | 12" | 11'-9 | | | | | | | 9 | 9'-9 | #5 | 12" | 3'-0 | 3 | #5 | 12" | 3'-9 | 3 | .638 | 42.06 | 2070 |
| 11' | 5'-9 | 1'-3 | 1'-11 | 1'-0 | 2'-10 | #5 | 13" | 5'-9 | #5 | 13" | 13'-9 | | | | 10 | 10'-9 | #5 | 13" | 3'-3 | 3 | #6 | 13" | 4'-3 | 4 | .695 | 46.94 | 2210 |
| 12' | 6'-3 | 1'-3 | 2'-1 | 1'-0 | 3'-2 | #6 | 12" | 6'-9 | #5 | 12" | 14'-9 | | | | 11 | 11'-9 | #5 | 12" | 3'-6 | 3 | #5 | 6" | 4'-6 | 4 | .752 | 58.82 | 2350 |
| 13' | 6'-9 | 1'-3 | 2'-3 | 1'-0 | 3'-6 | #7 | 11" | 7'-6 | #5 | 11" | 15'-9 | | | | 12 | 12'-9 | #5 | 11" | 3'-6 | 3 | #7 | 11" | 5'-3 | 4 | .809 | 71.71 | 2490 |
| 14' | 7'-0 | 1'-3 | 2'-4 | 1'-1 | 3'-7 | #8 | 14" | 8'-0 | #6 | 14" | 16'-9 | | | | 13 | 13'-9 | #6 | 14" | 3'-9 | 3 | #6 | 7" | 5'-0 | 4 | .877 | 80.06 | 2810 |
| 15' | 7'-6 | 1'-3 | 2'-6 | 1'-2 | 3'-10 | #8 | 12" | 8'-6 | #6 | 12" | 17'-9 | | | | 14 | 14'-9 | #6 | 12" | 4'-0 | 3 | #6 | 6" | 5'-3 | 4 | .958 | 94.74 | 2950 |
| 16' | 8'-0 | 1'-3 | 2'-8 | 1'-3 | 4'-1 | #8 | 12" | 8'-3 | #7 | 12" | 11'-3 | #5 | 12" | 8'-9 | 15 | 15'-9 | #5 | 6" | 4'-3 | 3 | #7 | 6" | 5'-9 | 4 | 1.043 | 111.23 | 3090 |
| 17' | 8'-6 | 1'-4 | 2'-10 | 1'-4 | 4'-4 | #8 | 11" | 8'-9 | #7 | 11" | 12'-0 | #5 | 11" | 9'-3 | 16 | 16'-9 | #5 | 5½" | 4'-6 | 3 | #7 | 5½" | 6'-0 | 4 | 1.157 | 125.59 | 3240 |
| 18' | 9'-0 | 1'-5 | 3'-0 | 1'-5 | 4'-7 | #9 | 11" | 9'-6 | #7 | 11" | 13'-0 | #5 | 11" | 9'-3 | 17 | 17'-9 | #5 | 5½" | 4'-9 | 4 | #7 | 5½" | 6'-3 | 5 | 1.278 | 141.71 | 3480 |
| 19' | 9'-6 | 1'-6 | 3'-2 | 1'-7 | 4'-9 | #10 | 14" | 10'-3 | #8 | 14" | 13'-3 | #6 | 14" | 10'-3 | 18 | 18'-9 | #6 | 7" | 5'-0 | 4 | #8 | 7" | 7'-3 | 6 | 1.434 | 157.51 | 3680 |
| 20' | 10'-0 | 1'-7 | 3'-4 | 1'-8 | 5'-0 | #10 | 13" | 10'-6 | #8 | 13" | 14'-0 | #6 | 13" | 10'-9 | 19 | 19'-9 | #6 | 6½" | 5'-3 | 4 | #8 | 6½" | 7'-3 | 6 | 1.568 | 172.56 | 3880 |

## CASE II - LEVEL FILL WITH 2' SURCHARGE

| Dimensions | | | | | | Steel List | | | | | | | | | | | | | | | | | | | Quantities | | Max. Toe Press. Lbs. / Sq. Ft. |
|---|---|---|---|---|---|---|---|---|---|---|---|---|---|---|---|---|---|---|---|---|---|---|---|---|---|---|---|
| | | | | | | s1 | | | s2 | | | s3 | | | h | v | b | | | f1 | t | | | f2 | | | |
| H | W | B | C | F | E | Size | Spacing | Length | Size | Spacing | Length | Size | Spacing | Length | Number ⊕ | Length | Size | Spacing | Length | Number ⊕ | Size | Spacing | Length | Number ⊕ | Concrete Cu. Yds. / Lin. Ft. | Steel Lbs. / Lin. Ft. | |
| 4' | 3'-3 | 1'-3 | 1'-1 | 1'-0 | 1'-2 | #5 | 12" | 5'-9 | | | | | | | 3 | 3'-9 | #5 | 12" | 2'-6 | 2 | #5 | 12" | 2'-6 | 3 | .342 | 21.23 | 1180 |
| 5' | 3'-6 | 1'-3 | 1'-2 | 1'-0 | 1'-4 | #5 | 12" | 6'-9 | | | | | | | 4 | 4'-9 | #5 | 12" | 2'-6 | 2 | #5 | 12" | 2'-9 | 3 | .387 | 23.65 | 1530 |
| 6' | 4'-0 | 1'-3 | 1'-4 | 1'-0 | 1'-8 | #5 | 12" | 7'-9 | | | | | | | 5 | 5'-9 | #5 | 12" | 2'-9 | 2 | #5 | 12" | 3'-0 | 3 | .444 | 26.32 | 1700 |
| 7' | 4'-6 | 1'-3 | 1'-6 | 1'-0 | 2'-0 | #5 | 12" | 8'-9 | | | | | | | 6 | 6'-9 | #5 | 12" | 2'-9 | 3 | #5 | 12" | 3'-3 | 3 | .502 | 29.41 | 1860 |
| 8' | 5'-0 | 1'-3 | 1'-8 | 1'-0 | 2'-4 | #5 | 9" | 9'-9 | | | | | | | 7 | 7'-9 | #5 | 12" | 3'-0 | 3 | #5 | 12" | 3'-9 | 3 | .559 | 35.74 | 2020 |
| 9' | 5'-6 | 1'-3 | 1'-10 | 1'-0 | 2'-8 | #5 | 14" | 5'-3 | #5 | 14" | 11'-9 | | | | 8 | 8'-9 | #5 | 14" | 3'-3 | 3 | #6 | 14" | 4'-0 | 4 | .616 | 40.17 | 2170 |
| 10' | 6'-0 | 1'-3 | 2'-0 | 1'-0 | 3'-0 | #5 | 11" | 5'-9 | #5 | 11" | 12'-9 | | | | 9 | 9'-9 | #5 | 11" | 3'-3 | 3 | #6 | 11" | 4'-3 | 4 | .673 | 49.75 | 2330 |
| 11' | 6'-6 | 1'-3 | 2'-2 | 1'-0 | 3'-4 | #7 | 12" | 7'-3 | #5 | 12" | 13'-9 | | | | 10 | 10'-9 | #5 | 12" | 3'-6 | 3 | #6 | 9" | 4'-9 | 4 | .730 | 61.47 | 2480 |
| 12' | 7'-0 | 1'-3 | 2'-4 | 1'-1 | 3'-7 | #8 | 14" | 7'-9 | #6 | 14" | 14'-9 | | | | 11 | 11'-9 | #6 | 14" | 3'-9 | 3 | #6 | 7" | 5'-0 | 4 | .806 | 74.69 | 2630 |
| 13' | 7'-6 | 1'-3 | 2'-6 | 1'-2 | 3'-10 | #8 | 12" | 8'-0 | #6 | 12" | 15'-9 | | | | 12 | 12'-9 | #6 | 12" | 4'-0 | 3 | #6 | 6" | 5'-3 | 4 | .884 | 88.17 | 2780 |
| 14' | 8'-0 | 1'-3 | 2'-8 | 1'-3 | 4'-1 | #8 | 13" | 8'-3 | #7 | 13" | 11'-0 | #5 | 13" | 7'-0 | 13 | 13'-9 | #5 | 6½" | 4'-3 | 3 | #7 | 6½" | 5'-9 | 4 | .966 | 100.20 | 2940 |
| 15' | 8'-6 | 1'-3 | 2'-10 | 1'-4 | 4'-4 | #8 | 11" | 8'-3 | #7 | 11" | 11'-3 | #5 | 11" | 7'-9 | 14 | 14'-9 | #5 | 5½" | 4'-6 | 3 | #7 | 5½" | 6'-0 | 4 | 1.051 | 118.53 | 3090 |
| 16' | 9'-0 | 1'-5 | 3'-0 | 1'-5 | 4'-7 | #9 | 11" | 9'-6 | #7 | 11" | 12'-6 | #5 | 11" | 7'-9 | 15 | 15'-9 | #5 | 5½" | 4'-9 | 4 | #7 | 5½" | 6'-3 | 5 | 1.195 | 136.66 | 3340 |
| 17' | 9'-6 | 1'-6 | 3'-2 | 1'-6 | 4'-10 | #9 | 10" | 9'-6 | #7 | 10" | 13'-0 | #5 | 10" | 8'-3 | 16 | 16'-9 | #5 | 5" | 5'-0 | 4 | #7 | 5" | 6'-9 | 5 | 1.318 | 153.76 | 3540 |
| 18' | 10'-0 | 1'-7 | 3'-4 | 1'-8 | 5'-0 | #9 | 12" | 10'-0 | #8 | 12" | 13'-6 | #6 | 12" | 9'-3 | 17 | 17'-9 | #6 | 6" | 5'-3 | 4 | #8 | 6" | 7'-3 | 6 | 1.475 | 167.36 | 3750 |
| 19' | 10'-6 | 1'-8 | 3'-6 | 1'-9 | 5'-3 | #10 | 12" | 11'-0 | #8 | 12" | 14'-6 | #6 | 12" | 9'-3 | 18 | 18'-9 | #6 | 6" | 5'-6 | 4 | #8 | 6" | 7'-6 | 6 | 1.613 | 186.56 | 3950 |
| 20' | 11'-0 | 1'-9 | 3'-8 | 1'-10 | 5'-6 | #10 | 11" | 11'-6 | #8 | 11" | 15'-0 | #6 | 11" | 9'-9 | 19 | 19'-9 | #6 | 5½" | 5'-9 | 4 | #8 | 5½" | 7'-9 | 6 | 1.756 | 208.81 | 4150 |

## CASE III - 2:1 SLOPING FILL

| Dimensions | | | | | | Steel List | | | | | | | | | | | | | | | | | | | Quantities | | Max. Toe Press. Lbs. / Sq. Ft. |
|---|---|---|---|---|---|---|---|---|---|---|---|---|---|---|---|---|---|---|---|---|---|---|---|---|---|---|---|
| | | | | | | s1 | | | s2 | | | s3 | | | h | v | b | | | f1 | t | | | f2 | | | |
| H | W | B | C | F | E | Size | Spacing | Length | Size | Spacing | Length | Size | Spacing | Length | Number ⊕ | Length | Size | Spacing | Length | Number ⊕ | Size | Spacing | Length | Number ⊕ | Concrete Cu. Yds. / Lin. Ft. | Steel Lbs. / Lin. Ft. | |
| 4' | 2'-6 | 1'-3 | 0'-9 | 1'-0 | 0'-9 | #5 | 12" | 5'-9 | | | | | | | 3 | 3'-9 | #5 | 12" | 2'-0 | 2 | #5 | 12" | 2'-0 | 3 | .307 | 20.19 | 1290 |
| 5' | 3'-0 | 1'-3 | 0'-11 | 1'-0 | 1'-1 | #5 | 12" | 6'-9 | | | | | | | 4 | 4'-9 | #5 | 12" | 2'-3 | 2 | #5 | 12" | 2'-6 | 3 | .364 | 23.13 | 1520 |
| 6' | 3'-6 | 1'-3 | 1'-1 | 1'-0 | 1'-5 | #5 | 12" | 7'-9 | | | | | | | 5 | 5'-9 | #5 | 12" | 2'-6 | 2 | #5 | 12" | 2'-9 | 3 | .421 | 25.80 | 1740 |
| 7' | 4'-0 | 1'-3 | 1'-3 | 1'-0 | 1'-9 | #5 | 12" | 8'-9 | | | | | | | 6 | 6'-9 | #5 | 12" | 2'-6 | 2 | #5 | 12" | 3'-0 | 3 | .478 | 28.22 | 1960 |
| 8' | 4'-6 | 1'-3 | 1'-6 | 1'-0 | 2'-0 | #5 | 12" | 9'-9 | | | | | | | 7 | 7'-9 | #5 | 12" | 2'-9 | 3 | #5 | 12" | 3'-3 | 3 | .536 | 31.57 | 2120 |
| 9' | 5'-0 | 1'-3 | 1'-8 | 1'-0 | 2'-4 | #5 | 9" | 10'-9 | | | | | | | 8 | 8'-9 | #5 | 12" | 3'-0 | 3 | #5 | 12" | 3'-9 | 3 | .593 | 38.24 | 2340 |
| 10' | 5'-6 | 1'-3 | 1'-10 | 1'-0 | 2'-8 | #5 | 14" | 5'-9 | #5 | 14" | 12'-9 | | | | 9 | 9'-9 | #5 | 14" | 3'-3 | 3 | #6 | 14" | 4'-0 | 4 | .650 | 42.63 | 2560 |
| 11' | 6'-0 | 1'-3 | 2'-0 | 1'-0 | 3'-0 | #6 | 12" | 6'-3 | #5 | 12" | 13'-9 | | | | 10 | 10'-9 | #5 | 12" | 3'-3 | 3 | #5 | 6" | 4'-3 | 4 | .707 | 55.13 | 2780 |
| 12' | 6'-6 | 1'-3 | 2'-2 | 1'-0 | 3'-4 | #7 | 11" | 6'-9 | #5 | 11" | 14'-9 | | | | 11 | 11'-9 | #5 | 11" | 3'-6 | 3 | #5 | 5½" | 4'-9 | 4 | .764 | 66.89 | 3000 |
| 13' | 7'-3 | 1'-3 | 2'-5 | 1'-1 | 3'-9 | #8 | 14" | 8'-0 | #6 | 14" | 15'-9 | | | | 12 | 12'-9 | #5 | 7" | 3'-9 | 3 | #7 | 7" | 5'-6 | 4 | .853 | 85.94 | 3030 |
| 14' | 7'-9 | 1'-3 | 2'-7 | 1'-2 | 4'-0 | #8 | 12" | 8'-0 | #6 | 12" | 16'-9 | | | | 13 | 13'-9 | #5 | 6" | 4'-0 | 3 | #7 | 6" | 5'-9 | 4 | .933 | 100.85 | 3250 |
| 15' | 8'-3 | 1'-5 | 2'-9 | 1'-3 | 4'-3 | #8 | 12" | 8'-3 | #7 | 12" | 11'-0 | #5 | 12" | 8'-3 | 14 | 14'-9 | #5 | 6" | 4'-3 | 3 | #7 | 6" | 6'-0 | 4 | 1.067 | 110.11 | 3590 |
| 16' | 8'-9 | 1'-6 | 2'-11 | 1'-5 | 4'-5 | #8 | 11" | 8'-6 | #7 | 11" | 11'-6 | #5 | 11" | 8'-9 | 15 | 15'-9 | #5 | 5½" | 4'-9 | 3 | #7 | 5½" | 6'-3 | 5 | 1.208 | 124.42 | 3880 |
| 17' | 9'-3 | 1'-7 | 3'-1 | 1'-6 | 4'-8 | #9 | 13" | 9'-3 | #8 | 13" | 12'-6 | #6 | 13" | 9'-3 | 16 | 16'-9 | #6 | 6½" | 5'-0 | 4 | #8 | 6½" | 7'-0 | 5 | 1.333 | 148.18 | 4160 |
| 18' | 10'-0 | 1'-9 | 3'-4 | 1'-7 | 5'-1 | #10 | 13" | 10'-3 | #8 | 13" | 13'-0 | #6 | 13" | 9'-9 | 17 | 17'-9 | #6 | 6½" | 5'-3 | 4 | #8 | 6½" | 7'-6 | 6 | 1.509 | 166.74 | 4320 |
| 19' | 10'-6 | 1'-11 | 3'-6 | 1'-9 | 5'-3 | #10 | 12" | 10'-9 | #8 | 12" | 13'-9 | #6 | 12" | 10'-3 | 18 | 18'-9 | #6 | 6" | 5'-6 | 4 | #8 | 6" | 7'-6 | 6 | 1.710 | 184.99 | 4670 |
| 20' | 11'-3 | 2'-0 | 3'-9 | 1'-10 | 5'-8 | #10 | 11" | 11'-3 | #8 | 11" | 14'-3 | #6 | 11" | 10'-9 | 19 | 19'-9 | #6 | 5½" | 6'-0 | 4 | #8 | 5½" | 8'-0 | 6 | 1.877 | 209.38 | 4760 |

## CASE IV - 1½:1 SLOPING FILL

| Dimensions | | | | | | Steel List | | | | | | | | | | | | | | | | | | | Quantities | | Max. Toe Press. Lbs. / Sq. Ft. |
|---|---|---|---|---|---|---|---|---|---|---|---|---|---|---|---|---|---|---|---|---|---|---|---|---|---|---|---|
| | | | | | | s1 | | | s2 | | | s3 | | | h | v | b | | | f1 | t | | | f2 | | | |
| H | W | B | C | F | E | Size | Spacing | Length | Size | Spacing | Length | Size | Spacing | Length | Number ⊕ | Length | Size | Spacing | Length | Number ⊕ | Size | Spacing | Length | Number ⊕ | Concrete Cu. Yds. / Lin. Ft. | Steel Lbs. / Lin. Ft. | |
| 4' | 3'-0 | 1'-3 | 1'-0 | 1'-0 | 1'-0 | #5 | 12" | 5'-9 | | | | | | | 3 | 3'-9 | #5 | 12" | 2'-3 | 2 | #5 | 12" | 2'-3 | 3 | .330 | 20.71 | 1520 |
| 5' | 3'-9 | 1'-3 | 1'-3 | 1'-0 | 1'-6 | #5 | 12" | 6'-9 | | | | | | | 4 | 4'-9 | #5 | 12" | 2'-6 | 2 | #5 | 12" | 2'-9 | 3 | .399 | 23.65 | 1720 |
| 6' | 4'-6 | 1'-3 | 1'-6 | 1'-0 | 2'-0 | #5 | 12" | 7'-9 | | | | | | | 5 | 5'-9 | #5 | 12" | 2'-9 | 3 | #5 | 12" | 3'-3 | 3 | .468 | 27.25 | 1920 |
| 7' | 5'-0 | 1'-3 | 1'-8 | 1'-0 | 2'-4 | #5 | 11" | 8'-9 | | | | | | | 6 | 6'-9 | #5 | 11" | 3'-0 | 3 | #5 | 11" | 3'-6 | 3 | .525 | 31.38 | 2290 |
| 8' | 5'-9 | 1'-3 | 1'-11 | 1'-0 | 2'-10 | #6 | 10½" | 9'-9 | | | | | | | 7 | 7'-9 | #5 | 10½" | 3'-3 | 3 | #5 | 10½" | 4'-0 | 4 | .593 | 41.19 | 2490 |
| 9' | 6'-6 | 1'-3 | 2'-2 | 1'-0 | 3'-4 | #6 | 11" | 5'-9 | #5 | 11" | 11'-9 | | | | 8 | 8'-9 | #5 | 11" | 3'-6 | 3 | #6 | 11" | 4'-6 | 4 | .662 | 51.07 | 2680 |
| 10' | 7'-3 | 1'-4 | 2'-5 | 1'-0 | 3'-10 | #7 | 11" | 6'-9 | #5 | 11" | 13'-0 | | | | 9 | 9'-9 | #6 | 11" | 3'-9 | 3 | #6 | 11" | 5'-3 | 4 | .753 | 62.62 | 2950 |
| 11' | 8'-0 | 1'-5 | 2'-8 | 1'-1 | 4'-3 | #8 | 12" | 7'-3 | #6 | 12" | 14'-0 | | | | 10 | 10'-9 | #6 | 9" | 4'-0 | 3 | #6 | 9" | 5'-6 | 4 | .866 | 78.55 | 3220 |
| 12' | 8'-9 | 1'-6 | 2'-11 | 1'-3 | 4'-7 | #8 | 12" | 7'-0 | #7 | 12" | 9'-6 | #5 | 12" | 6'-9 | 11 | 11'-9 | #7 | 12" | 4'-6 | 3 | #7 | 9" | 6'-3 | 5 | 1.005 | 92.31 | 3500 |
| 13' | 9'-6 | 1'-7 | 3'-2 | 1'-4 | 5'-0 | #9 | 12" | 8'-0 | #7 | 12" | 10'-9 | #5 | 12" | 6'-9 | 12 | 12'-9 | #7 | 9" | 4'-9 | 4 | #6 | 6" | 6'-3 | 5 | 1.134 | 110.63 | 3770 |
| 14' | 10'-3 | 1'-8 | 3'-5 | 1'-6 | 5'-4 | #9 | 11" | 8'-9 | #7 | 11" | 11'-3 | #5 | 11" | 7'-3 | 13 | 13'-9 | #8 | 11" | 5'-3 | 4 | #6 | 5½" | 6'-9 | 5 | 1.293 | 127.03 | 4040 |
| 15' | 11'-0 | 1'-9 | 3'-8 | 1'-8 | 5'-8 | #9 | 12" | 9'-0 | #8 | 12" | 11'-6 | #6 | 12" | 8'-3 | 14 | 14'-9 | #9 | 12" | 5'-9 | 4 | #7 | 6" | 7'-6 | 6 | 1.463 | 149.51 | 4310 |
| 16' | 11'-9 | 1'-10 | 3'-11 | 1'-9 | 6'-1 | #10 | 12" | 10'-0 | #8 | 12" | 12'-9 | #6 | 12" | 8'-3 | 15 | 15'-9 | #7 | 6" | 6'-0 | 4 | #8 | 6" | 8'-3 | 6 | 1.619 | 184.77 | 4590 |
| 17' | 12'-6 | 2'-0 | 4'-2 | 1'-11 | 6'-5 | #10 | 11" | 10'-3 | #8 | 11" | 13'-3 | #6 | 11" | 8'-9 | 16 | 16'-9 | #7 | 5½" | 6'-6 | 4 | #8 | 5½" | 8'-6 | 6 | 1.847 | 207.39 | 4930 |
| 18' | 13'-3 | 2'-1 | 4'-5 | 2'-1 | 6'-9 | #10 | 10" | 10'-9 | #8 | 10" | 14'-0 | #6 | 10" | 9'-3 | 17 | 17'-9 | #7 | 5" | 6'-9 | 4 | #8 | 5" | 9'-0 | 6 | 2.050 | 236.76 | 5200 |
| 19' | 14'-0 | 2'-2 | 4'-8 | 2'-3 | 7'-1 | #11 | 10" | 11'-6 | #8 | 10" | 15'-0 | #6 | 10" | 9'-3 | 18 | 18'-9 | #9 | 7½" | 7'-3 | 5 | #8 | 5" | 9'-6 | 7 | 2.264 | 269.75 | 5480 |
| 20' | 14'-9 | 2'-3 | 4'-11 | 2'-5 | 7'-5 | #11 | 10" | 11'-9 | #9 | 10" | 16'-0 | #6 | 10" | 9'-3 | 19 | 19'-9 | #8 | 5" | 7'-9 | 5 | #8 | 5" | 10'-0 | 7 | 2.488 | 303.11 | 5750 |

⊕ Total number of bars in cross-section

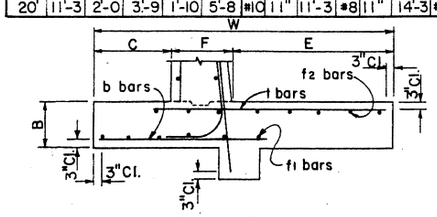


FOOTING STEEL DETAIL

NOTES:

See B-18.10 for General Notes and all other Details.

All h, v, f1 and f2 bars shall be #4 bars spaced as shown.

| NO. | DESCRIPTION OF REVISIONS | MADE BY | DATE |
|---|---|---|---|
| 1 | 10-72 | | |
| 2 | 3-73 | | |
| 3 | 3-73 | | |

| | | |
|---|---|---|
| DESIGN | DHY | 10-72 |
| DRAWN | GFB | 3-73 |
| CHECKED | NAB | 3-73 |

DESIGN APPROVED: R.C. Brechler

APPROVED FOR DISTRIBUTION

ARIZONA DEPARTMENT OF TRANSPORTATION
HIGHWAYS DIVISION
STANDARD PLANS

CANTILEVER RETAINING WALLS ON SPREAD FOOTINGS

REVISION

STANDARD NO. RW-2

PLAN NO. B-18.20

## CASE I – LEVEL FILL

| H | W | B | C | F | E | Pile Pattern Type | Sp1 | Sp2 | s1 Size | s1 Spacing | s1 Length | s2 Size | s2 Spacing | s2 Length | s3 Size | s3 Spacing | s3 Length | h Number⊕ | v Length | b Size | b Spacing | t Size | t Spacing | p1 Size | p2 Size | p3 Size | f3 Number⊕ | Concrete C.Y./Lin. Ft. | Reinforcing Steel Lbs./Lin. Ft. |
|---|---|---|---|---|---|---|---|---|---|---|---|---|---|---|---|---|---|---|---|---|---|---|---|---|---|---|---|---|---|
| 4' | 4'-0 | 2'-3 | 1'-3 | 1'-0 | 1'-9 | 1 | 8'-0 | | #5 | 12" | 5'-6 | | | | | | | 3 | 3'-9 | #5 | 12" | #5 | 12" | | | #6 | | .469 | 36.9 |
| 5' | 4'-3 | 2'-3 | 1'-6 | 1'-0 | 1'-9 | 1 | 8'-0 | | #5 | 12" | 6'-6 | | | | | | | 4 | 4'-9 | #5 | 12" | #5 | 12" | #6* | | #6 | | .524 | 44.1 |
| 6' | 4'-6 | 2'-3 | 1'-6 | 1'-0 | 2'-0 | 1 | 8'-0 | | #5 | 12" | 7'-6 | | | | | | | 5 | 5'-9 | #5 | 12" | #5 | 12" | #6* | | #6 | | .579 | 46.8 |
| 7' | 4'-9 | 2'-3 | 1'-9 | 1'-0 | 2'-0 | 1 | 8'-0 | | #5 | 12" | 8'-6 | | | | | | | 6 | 6'-9 | #5 | 12" | #5 | 12" | #6* | | #6 | | .634 | 49.5 |
| 8' | 5'-0 | 2'-3 | 1'-9 | 1'-0 | 2'-3 | 1 | 8'-0 | | #5 | 12" | 9'-6 | | | | | | | 7 | 7'-9 | #5 | 12" | #5 | 12" | #6* | | #6 | | .688 | 52.1 |
| 9' | 5'-6 | 2'-3 | 2'-0 | 1'-0 | 2'-6 | 1 | 8'-0 | | #5 | 12" | 10'-6 | | | | | | | 8 | 8'-9 | #5 | 12" | #5 | 12" | #7 | | #6 | | .764 | 63.1 |
| 10' | 5'-9 | 2'-3 | 2'-0 | 1'-0 | 2'-9 | 1 | 8'-0 | | #6 | 12" | 11'-6 | | | | | | | 9 | 9'-9 | #5 | 12" | #5 | 12" | #8 | | #6 | | .819 | 74.8 |
| 11' | 6'-0 | 2'-3 | 2'-0 | 1'-0 | 3'-0 | 1 | 8'-0 | | #5 | 13" | 5'-6 | #5 | 13" | 14'-6 | | | | 10 | 10'-9 | #5 | 13" | #5 | 13" | #8 | | #6 | 2 | .874 | 78.9 |
| 12' | 6'-6 | 2'-3 | 2'-3 | 1'-0 | 3'-3 | 1 | 7'-6 | | #6 | 12" | 6'-6 | #5 | 12" | 15'-6 | | | | 11 | 11'-9 | #5 | 12" | #5 | 12" | #8 | | #6 | 2 | .949 | 88.7 |
| 13' | 6'-9 | 2'-3 | 2'-3 | 1'-0 | 3'-6 | 1 | 6'-6 | | #7 | 11" | 7'-3 | #5 | 11" | 16'-6 | | | | 12 | 12'-9 | #5 | 11" | #5 | 11" | #8 | | #6 | 2 | 1.004 | 100.9 |
| 14' | 7'-0 | 2'-3 | 2'-6 | 1'-1 | 3'-5 | 1 | 6'-0 | | #8 | 14" | 7'-9 | #6 | 14" | 17'-6 | | | | 13 | 13'-9 | #5 | 7" | #6 | 14" | #8 | | #6 | 2 | 1.080 | 113.4 |
| 15' | 7'-3 | 2'-3 | 2'-6 | 1'-2 | 3'-7 | 2 | 8'-0 | 16'-0 | #8 | 12" | 7'-9 | #6 | 12" | 18'-6 | | | | 14 | 14'-9 | #5 | 12" | #5 | 9" | #6 | | #6 | 2 | 1.160 | 110.3 |
| 16' | 7'-6 | 2'-3 | 2'-6 | 1'-3 | 3'-9 | 2 | 8'-0 | 16'-0 | #8 | 12" | 7'-9 | #7 | 12" | 12'-0 | #5 | 12" | 8'-9 | 15 | 15'-9 | #5 | 12" | #5 | 8" | #6 | | #6 | 4 | 1.242 | 120.4 |
| 17' | 8'-0 | 2'-3 | 2'-9 | 1'-4 | 3'-11 | 2 | 8'-0 | 16'-0 | #8 | 11" | 8'-0 | #7 | 11" | 12'-6 | #5 | 11" | 9'-3 | 16 | 16'-9 | #5 | 5½" | #5 | 5½" | #6 | | #6 | 4 | 1.349 | 144.8 |
| 18' | 8'-9 | 2'-3 | 3'-0 | 1'-5 | 4'-4 | 2 | 8'-0 | 16'-0 | #9 | 11" | 10'-6 | #7 | 11" | 13'-6 | #5 | 11" | 9'-3 | 17 | 17'-9 | #5 | 5½" | #6 | 5½" | #6 | | #6 | 4 | 1.479 | 175.5 |
| 19' | 9'-3 | 2'-3 | 3'-3 | 1'-7 | 4'-5 | 2 | 7'-0 | 16'-0 | #10 | 14" | 11'-0 | #8 | 14" | 13'-9 | #6 | 14" | 10'-3 | 18 | 18'-9 | #6 | 7" | #6 | 7" | #5 | | #6 | 6 | 1.621 | 180.1 |
| 20' | 9'-6 | 2'-3 | 3'-3 | 1'-8 | 4'-7 | 2 | 6'-6 | 16'-0 | #10 | 13" | 11'-3 | #8 | 13" | 14'-3 | #6 | 13" | 10'-9 | 19 | 19'-9 | #6 | 6½" | #6 | 6½" | #5 | | #6 | 6 | 1.718 | 195.5 |

## CASE II – LEVEL FILL WITH 2' SURCHARGE

| H | W | B | C | F | E | Pile Pattern Type | Sp1 | Sp2 | s1 Size | s1 Spacing | s1 Length | s2 Size | s2 Spacing | s2 Length | s3 Size | s3 Spacing | s3 Length | h Number⊕ | v Length | b Size | b Spacing | t Size | t Spacing | p1 Size | p2 Size | p3 Size | f3 Number⊕ | Concrete C.Y./Lin. Ft. | Reinforcing Steel Lbs./Lin. Ft. |
|---|---|---|---|---|---|---|---|---|---|---|---|---|---|---|---|---|---|---|---|---|---|---|---|---|---|---|---|---|---|
| 4' | 4'-0 | 2'-3 | 1'-6 | 1'-0 | 1-6 | 1 | 8'-0 | | #5 | 12" | 5'-6 | | | | | | | 3 | 3'-9 | #5 | 12" | #5 | 12" | | | #6 | | .469 | 36.9 |
| 5' | 4'-6 | 2'-3 | 1'-6 | 1'-0 | 2'-0 | 1 | 8'-0 | | #5 | 12" | 6'-6 | | | | | | | 4 | 4'-9 | #5 | 12" | #5 | 12" | #6* | | #6 | | .545 | 44.6 |
| 6' | 4'-9 | 2'-3 | 1'-9 | 1'-0 | 2'-0 | 1 | 8'-0 | | #5 | 12" | 7'-6 | | | | | | | 5 | 5'-9 | #5 | 12" | #5 | 12" | #6* | | #6 | | .600 | 47.3 |
| 7' | 5'-0 | 2'-3 | 1'-9 | 1'-0 | 2'-3 | 1 | 8'-0 | | #5 | 12" | 8'-6 | | | | | | | 6 | 6'-9 | #5 | 12" | #5 | 12" | #6* | | #6 | | .654 | 50.0 |
| 8' | 5'-6 | 2'-3 | 2'-0 | 1'-0 | 2'-6 | 1 | 8'-0 | | #5 | 9" | 9'-6 | | | | | | | 7 | 7'-9 | #5 | 12" | #5 | 12" | #7 | | #6 | | .730 | 64.2 |
| 9' | 5'-9 | 2'-3 | 2'-0 | 1'-0 | 2'-9 | 1 | 8'-0 | | #5 | 14" | 5'-0 | #5 | 14" | 12'-6 | | | | 8 | 8'-9 | #5 | 12" | #5 | 12" | #8 | | #6 | | .785 | 72.1 |
| 10' | 6'-3 | 2'-3 | 2'-3 | 1'-0 | 3'-0 | 1 | 8'-0 | | #5 | 11" | 5'-6 | #5 | 11" | 13'-6 | | | | 9 | 9'-9 | #5 | 12" | #5 | 12" | #8 | | #6 | 2 | .860 | 81.5 |
| 11' | 6'-6 | 2'-3 | 2'-3 | 1'-0 | 3'-3 | 1 | 7'-0 | | #7 | 12" | 7'-0 | #5 | 12" | 14'-6 | | | | 10 | 10'-9 | #5 | 12" | #5 | 12" | #8 | | #6 | 2 | .915 | 91.3 |
| 12' | 7'-3 | 2'-3 | 2'-6 | 1'-1 | 3'-8 | 1 | 6'-6 | | #8 | 14" | 7'-3 | #6 | 14" | 15'-6 | | | | 11 | 11'-9 | #5 | 7" | #6 | 14" | #8 | | #6 | 2 | 1.030 | 108.0 |
| 13' | 7'-6 | 2'-3 | 2'-6 | 1'-2 | 3'-10 | 1 | 5'-6 | | #8 | 12" | 7'-9 | #6 | 12" | 16'-6 | | | | 12 | 12'-9 | #5 | 6" | #5 | 8" | #8 | | #6 | 4 | 1.107 | 124.6 |
| 14' | 8'-0 | 2'-3 | 2'-9 | 1'-3 | 4'-0 | 2 | 8'-0 | 16'-0 | #8 | 13" | 8'-0 | #7 | 13" | 11'-9 | #5 | 13" | 7'-0 | 13 | 13'-9 | #6 | 13" | #5 | 6½" | #6 | | #6 | 4 | 1.207 | 119.1 |
| 15' | 8'-6 | 2'-3 | 3'-0 | 1'-4 | 4'-2 | 2 | 8'-0 | 16'-0 | #8 | 11" | 8'-0 | #7 | 11" | 12'-0 | #5 | 11" | 7'-9 | 14 | 14'-9 | #6 | 11" | #5 | 5½" | #6 | | #6 | 4 | 1.310 | 136.9 |
| 16' | 8'-9 | 2'-3 | 3'-0 | 1'-5 | 4'-4 | 2 | 8'-0 | 16'-0 | #9 | 12" | 10'-6 | #7 | 12" | 13'-3 | #5 | 12" | 7'-6 | 15 | 15'-9 | #6 | 9" | #6 | 6" | #6 | | #6 | 4 | 1.396 | 159.8 |
| 17' | 9'-0 | 2'-3 | 3'-0 | 1'-6 | 4'-6 | 2 | 7'-3 | 16'-0 | #9 | 11" | 11'-0 | #7 | 11" | 14'-0 | #5 | 11" | 7'-9 | 16 | 16'-9 | #7 | 11" | #6 | 5½" | #5 | | #6 | 4 | 1.485 | 173.8 |
| 18' | 9'-3 | 2'-3 | 3'-3 | 1'-8 | 4'-4 | 2 | 6'-3 | 16'-0 | #9 | 12" | 11'-0 | #8 | 12" | 13'-9 | #6 | 12" | 9'-3 | 17 | 17'-9 | #7 | 9" | #7 | 9" | #5 | | #6 | 6 | 1.604 | 184.4 |
| 19' | 9'-9 | 2'-3 | 3'-4 | 1'-9 | 4'-8 | 2 | 5'-9 | 16'-0 | #10 | 12" | 12'-0 | #8 | 12" | 14'-9 | #6 | 12" | 9'-3 | 18 | 18'-9 | #7 | 8" | #7 | 8" | #5 | | #6 | 6 | 1.721 | 211.4 |
| 20' | 10'-0 | 2'-3 | 3'-6 | 1'-10 | 4'-8 | 2 | 5'-3 | 16'-0 | #10 | 11" | 12'-3 | #8 | 11" | 15'-3 | #6 | 11" | 9'-9 | 19 | 19'-9 | #7 | 5½" | #6 | 5½" | #5 | | #6 | 6 | 1.821 | 242.3 |

## CASE III – 2:1 SLOPING FILL

| H | W | B | C | F | E | Pile Pattern Type | Sp1 | Sp2 | s1 Size | s1 Spacing | s1 Length | s2 Size | s2 Spacing | s2 Length | s3 Size | s3 Spacing | s3 Length | h Number⊕ | v Length | b Size | b Spacing | t Size | t Spacing | p1 Size | p2 Size | p3 Size | f3 Number⊕ | Concrete C.Y./Lin. Ft. | Reinforcing Steel Lbs./Lin. Ft. |
|---|---|---|---|---|---|---|---|---|---|---|---|---|---|---|---|---|---|---|---|---|---|---|---|---|---|---|---|---|---|
| 4' | 4'-0 | 2'-3 | 1'-3 | 1'-0 | 1'-9 | 1 | 8'-0 | | #5 | 12" | 5'-6 | | | | | | | 3 | 3'-9 | #5 | 12" | #5 | 12" | | | #6 | | .469 | 36.9 |
| 5' | 4'-3 | 2'-3 | 1'-6 | 1'-0 | 1'-9 | 1 | 8'-0 | | #5 | 12" | 6'-6 | | | | | | | 4 | 4'-9 | #5 | 12" | #5 | 12" | #6* | | #6 | | .524 | 44.1 |
| 6' | 4'-6 | 2'-3 | 1'-6 | 1'-0 | 2'-0 | 1 | 8'-0 | | #5 | 12" | 7'-6 | | | | | | | 5 | 5'-9 | #5 | 12" | #5 | 12" | #6* | | #6 | | .579 | 46.8 |
| 7' | 4'-9 | 2'-3 | 1'-9 | 1'-0 | 2'-0 | 1 | 8'-0 | | #5 | 12" | 8'-6 | | | | | | | 6 | 6'-9 | #5 | 12" | #5 | 12" | #6* | | #6 | | .634 | 49.5 |
| 8' | 5'-0 | 2'-3 | 1'-9 | 1'-0 | 2'-3 | 1 | 8'-0 | | #5 | 12" | 9'-6 | | | | | | | 7 | 7'-9 | #5 | 12" | #5 | 12" | #7* | | #6 | | .688 | 53.8 |
| 9' | 5'-6 | 2'-3 | 2'-0 | 1'-0 | 2'-6 | 1 | 8'-0 | | #5 | 9" | 10'-6 | | | | | | | 8 | 8'-9 | #5 | 12" | #5 | 12" | #8 | | #6 | | .764 | 70.5 |
| 10' | 5'-9 | 2'-3 | 2'-0 | 1'-0 | 2'-9 | 1 | 7'-0 | | #5 | 14" | 5'-6 | #5 | 14" | 13'-6 | | | | 9 | 9'-9 | #5 | 12" | #5 | 12" | #8 | | #6 | | .819 | 74.8 |
| 11' | 6'-0 | 2'-3 | 2'-0 | 1'-0 | 3'-0 | 1 | 6'-0 | | #6 | 12" | 6'-0 | #5 | 12" | 14'-6 | | | | 10 | 10'-9 | #5 | 12" | #5 | 12" | #8 | | #6 | | .874 | 84.0 |
| 12' | 6'-6 | 2'-3 | 2'-3 | 1'-0 | 3'-3 | 2 | 8'-0 | 16'-0 | #7 | 11" | 6'-6 | #5 | 11" | 15'-6 | | | | 11 | 11'-9 | #5 | 11" | #5 | 11" | #6 | | #7 | 2 | .949 | 91.1 |
| 13' | 6'-9 | 2'-3 | 2'-3 | 1'-1 | 3'-5 | 2 | 8'-0 | 16'-0 | #8 | 14" | 7'-6 | #6 | 14" | 16'-6 | | | | 12 | 12'-9 | #6 | 14" | #5 | 7" | #6 | | #7 | 2 | 1.024 | 104.0 |
| 14' | 7'-0 | 2'-3 | 2'-6 | 1'-2 | 3'-4 | 2 | 8'-0 | 16'-0 | #8 | 12" | 7'-9 | #6 | 12" | 17'-6 | | | | 13 | 13'-9 | #6 | 12" | #6 | 12" | #6 | | #7 | 2 | 1.102 | 114.0 |
| 15' | 7'-3 | 2'-3 | 2'-6 | 1'-3 | 3'-6 | 2 | 7'-6 | 16'-0 | #8 | 12" | 8'-0 | #7 | 12" | 11'-6 | #5 | 12" | 8'-3 | 14 | 14'-9 | #6 | 12" | #6 | 9" | #6 | | #6 | 2 | 1.183 | 122.5 |
| 16' | 7'-6 | 2'-3 | 2'-6 | 1'-5 | 3'-7 | 2 | 6'-9 | 16'-0 | #8 | 11" | 8'-3 | #7 | 11" | 12'-0 | #5 | 11" | 8'-9 | 15 | 15'-9 | #6 | 11" | #7 | 11" | #6 | | #6 | 4 | 1.292 | 135.7 |
| 17' | 8'-0 | 2'-3 | 2'-9 | 1'-6 | 3'-9 | 2 | 6'-0 | 16'-0 | #9 | 13" | 9'-9 | #8 | 13" | 12'-9 | #6 | 13" | 9'-3 | 16 | 16'-9 | #6 | 8" | #6 | 8" | #6 | | #6 | 4 | 1.401 | 157.6 |
| 18' | 9'-0 | 2'-3 | 3'-0 | 1'-7 | 4'-5 | 3 | 7'-6 | 16'-0 | #10 | 13" | 10'-9 | #8 | 13" | 13'-3 | #6 | 13" | 9'-9 | 17 | 17'-9 | #6 | 8" | #7 | 8" | #6 | #5 | #6 | 4 | 1.556 | 186.2 |
| 19' | 9'-3 | 2'-3 | 3'-3 | 1'-9 | 4'-3 | 3 | 7'-0 | 16'-0 | #10 | 12" | 11'-3 | #8 | 12" | 13'-9 | #6 | 12" | 10'-3 | 18 | 18'-9 | #6 | 6" | #7 | 8" | #6 | #5 | #5 | 6 | 1.680 | 205.5 |
| 20' | 9'-6 | 2'-3 | 3'-3 | 1'-10 | 4'-5 | 3 | 6'-0 | 16'-0 | #10 | 11" | 11'-9 | #8 | 11" | 14'-3 | #6 | 11" | 10'-9 | 19 | 19'-9 | #6 | 5½" | #7 | 5½" | #6 | #5 | #5 | 6 | 1.779 | 236.9 |

* Top p1 bars Omitted

## CASE IV – 1½:1 SLOPING FILL

| H | W | B | C | F | E | Pile Pattern Type | Sp1 | Sp2 | s1 Size | s1 Spacing | s1 Length | s2 Size | s2 Spacing | s2 Length | s3 Size | s3 Spacing | s3 Length | h Number⊕ | v Length | b Size | b Spacing | t Size | t Spacing | p1 Size | p2 Size | p3 Size | f3 Number⊕ | Concrete C.Y./Lin. Ft. | Reinforcing Steel Lbs./Lin. Ft. |
|---|---|---|---|---|---|---|---|---|---|---|---|---|---|---|---|---|---|---|---|---|---|---|---|---|---|---|---|---|---|
| 4' | 4'-0 | 2'-3 | 1'-6 | 1'-0 | 1'-6 | 1 | 8'-0 | | #5 | 12" | 5'-6 | | | | | | | 3 | 3'-9 | #5 | 12" | #5 | 12" | | | #7 | | .469 | 40.2 |
| 5' | 4'-6 | 2'-3 | 1'-6 | 1'-0 | 2'-0 | 1 | 8'-0 | | #5 | 12" | 6'-6 | | | | | | | 4 | 4'-9 | #5 | 12" | #5 | 12" | #6* | | #7 | | .545 | 47.9 |
| 6' | 5'-0 | 2'-3 | 1'-9 | 1'-0 | 2'-3 | 1 | 8'-0 | | #5 | 12" | 7'-6 | | | | | | | 5 | 5'-9 | #5 | 12" | #5 | 12" | #7* | | #7 | | .620 | 52.7 |
| 7' | 5'-6 | 2'-3 | 2'-0 | 1'-0 | 2'-6 | 1 | 7'-6 | | #5 | 11" | 8'-6 | | | | | | | 6 | 6'-9 | #5 | 12" | #5 | 12" | #8 | | #7 | | .696 | 66.8 |
| 8' | 6'-0 | 2'-3 | 2'-0 | 1'-0 | 3'-0 | 1 | 6'-0 | | #6 | 10" | 9'-6 | | | | | | | 7 | 7'-9 | #5 | 12" | #5 | 12" | #8 | | #7 | | .772 | 76.9 |
| 9' | 6'-3 | 2'-3 | 2'-3 | 1'-0 | 3'-0 | 2 | 8'-0 | 16'-0 | #6 | 11" | 5'-6 | #5 | 11" | 12'-6 | | | | 8 | 8'-9 | #5 | 11" | #5 | 11" | #6 | | #7 | 2 | .826 | 78.3 |
| 10' | 6'-6 | 2'-3 | 2'-3 | 1'-0 | 3'-3 | 2 | 7'-6 | 16'-0 | #7 | 11" | 6'-6 | #5 | 11" | 13'-6 | | | | 9 | 9'-9 | #5 | 11" | #6 | 11" | #6 | | #7 | 2 | .881 | 89.6 |
| 11' | 6'-9 | 2'-3 | 2'-3 | 1'-1 | 3'-5 | 2 | 6'-0 | 16'-0 | #8 | 12" | 6'-9 | #6 | 12" | 14'-6 | | | | 10 | 10'-9 | #5 | 12" | #6 | 9" | #5 | | #7 | 2 | .953 | 100.3 |
| 12' | 7'-6 | 2'-3 | 2'-6 | 1'-3 | 3'-9 | 2 | 5'-0 | 16'-0 | #8 | 12" | 6'-6 | #7 | 12" | 10'-0 | #5 | 12" | 6'-9 | 11 | 11'-9 | #6 | 12" | #6 | 8" | #5 | | #7 | 4 | 1.088 | 115.0 |
| 13' | 8'-3 | 2'-3 | 2'-9 | 1'-4 | 4'-2 | 2 | 4'-6 | 16'-0 | #9 | 12" | 9'-0 | #7 | 12" | 11'-0 | #5 | 12" | 6'-9 | 12 | 12'-9 | #6 | 9" | #6 | 6" | #5 | | #8 | 4 | 1.209 | 147.7 |
| 14' | 8'-6 | 2'-3 | 2'-9 | 1'-6 | 4'-3 | 2 | 3'-6 | 16'-0 | #9 | 11" | 9'-6 | #7 | 11" | 11'-6 | #5 | 11" | 7'-3 | 13 | 13'-9 | #5 | 5½" | #6 | 5½" | #5 | | #8 | 4 | 1.313 | 163.4 |
| 15' | 9'-0 | 2'-3 | 3'-0 | 1'-8 | 4'-4 | 3 | 5'-0 | 16'-0 | #9 | 12" | 9'-9 | #8 | 12" | 11'-9 | #6 | 12" | 8'-3 | 14 | 14'-9 | #7 | 9" | #8 | 9" | #5 | #5 | #6 | 4 | 1.445 | 176.4 |
| 16' | 9'-6 | 2'-3 | 3'-3 | 1'-9 | 4'-6 | 3 | 4'-3 | 16'-0 | #10 | 12" | 10'-9 | #8 | 12" | 12'-9 | #6 | 12" | 8'-3 | 15 | 15'-9 | #6 | 6" | #7 | 6" | #5 | #5 | #6 | 6 | 1.557 | 205.0 |
| 17' | 10'-0 | 2'-3 | 3'-6 | 1'-11 | 4'-7 | 3 | 4'-0 | 16'-0 | #10 | 11" | 11'-0 | #8 | 11" | 13'-3 | #6 | 11" | 8'-9 | 16 | 16'-9 | #6 | 5½" | #7 | 5½" | #5 | #5 | #6 | 6 | 1.699 | 227.7 |
| 18' | 10'-6 | 2'-4 | 3'-6 | 2'-1 | 4'-11 | 3 | 3'-3 | 16'-0 | #10 | 10" | 11'-3 | #8 | 10" | 13'-9 | #6 | 10" | 9'-3 | 17 | 17'-9 | #6 | 5" | #7 | 5" | #5 | #5 | #6 | 6 | 1.880 | 254.7 |
| 19' | 10'-9 | 2'-6 | 3'-9 | 2'-3 | 4'-9 | 3 | 3'-0 | 15'-0 | #11 | 10" | 12'-0 | #8 | 10" | 15'-0 | #6 | 10" | 9'-3 | 18 | 18'-9 | #7 | 5" | #7 | 5" | #5 | #5 | #5 | 8 | 2.080 | 292.3 |
| 20' | 11'-6 | 2'-6 | 4'-0 | 2'-5 | 5'-1 | 3 | 3'-0 | 9'-0 | #11 | 10" | 12'-6 | #9 | 10" | 16'-0 | #6 | 10" | 9'-3 | 19 | 19'-9 | #7 | 5" | #9 | 7½" | #5 | #5 | #5 | 8 | 2.269 | 327.8 |

⊕ Total number of bars in the cross-section

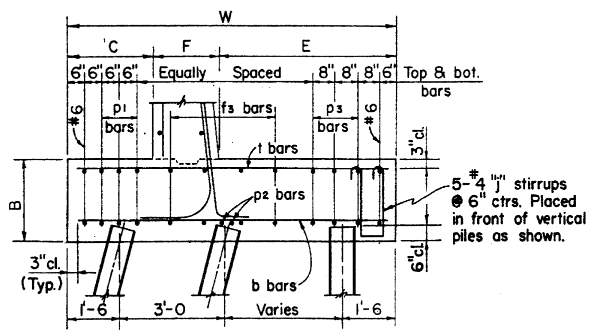


FOOTING STEEL DETAIL

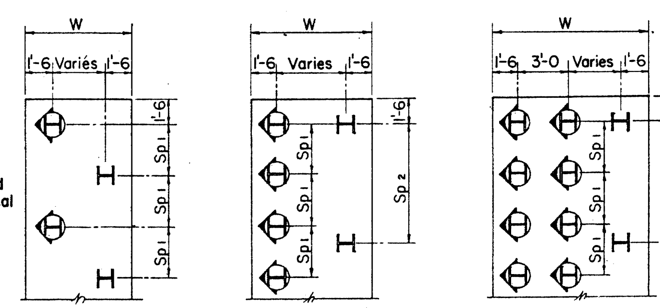


TYPE 1 TYPE 2 TYPE 3

Vertical Pile Battered Pile

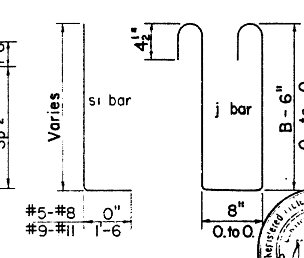


BENDS

NOTES:

All Piles shall be HP10x42 and Material shall conform to ASTM A36. Piling shall be driven to a minimum bearing of 55 tons.

Maximum shear resistance of each pile is assumed to be 20 kips. If the soil immediately below the pile cap is unstable or poorly consolidated, The pile pattern shall be checked

All h, v, and f3 bars shall be #4 spaced as shown.

See B-18.10 for General Notes and all other Details.

If pile splice is required, see B-19.10 for Details.

| | | | NO. | DESCRIPTION OF REVISIONS | MADE BY | DATE |
|---|---|---|---|---|---|---|
| DESIGN | DHY | 1-73 | ① | | | |
| DRAWN | GFB | 1-73 | ② | | | |
| CHECKED | NAB | 3-73 | ③ | | | |

DESIGN APPROVED R.C. Brechler

APPROVED FOR DISTRIBUTION

ARIZONA DEPARTMENT OF TRANSPORTATION
HIGHWAYS DIVISION
STANDARD PLANS

CANTILEVER RETAINING WALLS ON STEEL PILES

REVISION

STANDARD NO. RW-3

PLAN NO. B-18.30

## CASE I – LEVEL FILL

| DIMENSIONS | | | | | | PILE PATTERN | | | STEEL LIST | | | | | | | | | | | | | | | | | | QUANTITIES | |
|---|---|---|---|---|---|---|---|---|---|---|---|---|---|---|---|---|---|---|---|---|---|---|---|---|---|---|---|---|
| | | | | | | | | | s1 | | | s2 | | | s3 | | | h | v | b | | t | | p1 | p2 | p3 | f3 | | |
| H | W | B | C | F | E | Type | Sp 1 | Sp 2 | Size | Spacing | Length | Size | Spacing | Length | Size | Spacing | Length | Number ⌖ | Length | Size | Spacing | Size | Spacing | Size | Size | Size | Number ⌖ | Concrete CY./Lin.Ft. | Reinforcing Steel Lbs./Lin.Ft. |
| 4' | 4'-0 | 2'-0 | 1'-3 | 1'-0 | 1'-9 | 1 | 8'-0 | | #5 | 12" | 5'-6 | | | | | | | 3 | 3'-9 | #5 | 12" | #5 | 12" | | | | #6 | .432 | 34.7 |
| 5' | 4'-3 | 2'-0 | 1'-6 | 1'-0 | 1'-9 | 1 | 8'-0 | | #5 | 12" | 6'-6 | | | | | | | 4 | 4'-9 | #5 | 12" | #5 | 12" | #6* | | | #6 | .485 | 41.9 |
| 6' | 4'-6 | 2'-0 | 1'-6 | 1'-0 | 2'-0 | 1 | 8'-0 | | #5 | 12" | 7'-6 | | | | | | | 5 | 5'-9 | #5 | 12" | #5 | 12" | #6* | | | #6 | .537 | 44.6 |
| 7' | 4'-9 | 2'-0 | 1'-9 | 1'-0 | 2'-0 | 1 | 8'-0 | | #5 | 12" | 8'-6 | | | | | | | 6 | 6'-9 | #5 | 12" | #5 | 12" | #6* | | | #6 | .590 | 47.3 |
| 8' | 5'-0 | 2'-0 | 1'-9 | 1'-0 | 2'-3 | 1 | 8'-0 | | #5 | 12" | 9'-6 | | | | | | | 7 | 7'-9 | #5 | 12" | #5 | 12" | #6* | | | #6 | .642 | 50.0 |
| 9' | 5'-6 | 2'-0 | 2'-0 | 1'-0 | 2'-6 | 1 | 8'-0 | | #5 | 12" | 10'-6 | | | | | | | 8 | 8'-9 | #5 | 12" | #5 | 12" | #7 | | | #6 | .713 | 60.9 |
| 10' | 5'-9 | 2'-0 | 2'-0 | 1'-0 | 2'-9 | 1 | 8'-0 | | #6 | 12" | 11'-6 | | | | | | | 9 | 9'-9 | #5 | 12" | #5 | 12" | #7 | | | #6 | .765 | 68.9 |
| 11' | 6'-0 | 2'-0 | 2'-0 | 1'-0 | 3'-0 | 1 | 7'-0 | | #5 | 13" | 5'-6 | #5 | 13" | 14'-6 | | | | 10 | 10'-9 | #5 | 13" | #5 | 13" | #7 | | | #6 | 2 | .818 | 72.9 |
| 12' | 6'-6 | 2'-0 | 2'-3 | 1'-0 | 3'-3 | 1 | 6'-6 | | #6 | 12" | 6'-6 | #5 | 12" | 15'-6 | | | | 11 | 11'-9 | #5 | 12" | #5 | 12" | #7 | | | #6 | 2 | .890 | 82.7 |
| 13' | 6'-9 | 2'-0 | 2'-3 | 1'-0 | 3'-6 | 1 | 5'-6 | | #7 | 11" | 7'-3 | #5 | 11" | 16'-6 | | | | 12 | 12'-9 | #6 | 11" | #6 | 11" | #6 | | | #6 | 2 | .941 | 97.5 |
| 14' | 7'-0 | 2'-0 | 2'-6 | 1'-1 | 3'-5 | 1 | 5'-3 | | #8 | 14" | 7'-9 | #6 | 14" | 17'-6 | | | | 13 | 13'-9 | #5 | 7" | #6 | 14" | #6 | | | #6 | 2 | 1.015 | 103.4 |
| 15' | 7'-3 | 2'-0 | 2'-6 | 1'-2 | 3'-7 | 2 | 8'-0 | 16'-0 | #8 | 12" | 7'-9 | #6 | 12" | 18'-6 | | | | 14 | 14'-9 | #5 | 12" | #6 | 12" | #5 | | | #6 | 2 | 1.093 | 107.2 |
| 16' | 7'-6 | 2'-0 | 2'-6 | 1'-3 | 3'-9 | 2 | 8'-0 | 16'-0 | #8 | 12" | 7'-9 | #7 | 12" | 12'-0 | #5 | 12" | 8'-9 | 15 | 15'-9 | #5 | 9" | #6 | 9" | #5 | | | #6 | 4 | 1.173 | 122.1 |
| 17' | 8'-0 | 2'-0 | 2'-9 | 1'-4 | 3'-11 | 2 | 6'-9 | 16'-0 | #8 | 11" | 8'-0 | #7 | 11" | 12'-6 | #5 | 11" | 9'-3 | 16 | 16'-9 | #6 | 11" | #7 | 11" | #5 | | | #6 | 4 | 1.275 | 135.8 |
| 18' | 8'-9 | 2'-0 | 3'-0 | 1'-5 | 4'-4 | 2 | 6'-0 | 16'-0 | #9 | 11" | 10'-6 | #7 | 11" | 13'-6 | #5 | 11" | 9'-3 | 17 | 17'-9 | #5 | 5½" | #6 | 5½" | #5 | | | #6 | 4 | 1.398 | 171.6 |
| 19' | 9'-3 | 2'-0 | 3'-0 | 1'-7 | 4'-8 | 2 | 5'-3 | 16'-0 | #10 | 14" | 11'-0 | #8 | 14" | 13'-9 | #6 | 14" | 10'-3 | 18 | 18'-9 | #6 | 7" | #7 | 7" | #5 | | | #6 | 6 | 1.536 | 187.1 |
| 20' | 9'-6 | 2'-0 | 3'-0 | 1'-8 | 4'-10 | 2 | 4'-9 | 16'-0 | #10 | 13" | 11'-3 | #8 | 13" | 14'-3 | #6 | 13" | 10'-9 | 19 | 19'-9 | #6 | 6½" | #7 | 6½" | #5 | | | #6 | 6 | 1.630 | 203.4 |

## CASE II – LEVEL FILL WITH 2' SURCHARGE

| DIMENSIONS | | | | | | PILE PATTERN | | | STEEL LIST | | | | | | | | | | | | | | | | | | QUANTITIES | |
|---|---|---|---|---|---|---|---|---|---|---|---|---|---|---|---|---|---|---|---|---|---|---|---|---|---|---|---|---|
| | | | | | | | | | s1 | | | s2 | | | s3 | | | h | v | b | | t | | p1 | p2 | p3 | f3 | | |
| H | W | B | C | F | E | Type | Sp 1 | Sp 2 | Size | Spacing | Length | Size | Spacing | Length | Size | Spacing | Length | Number ⌖ | Length | Size | Spacing | Size | Spacing | Size | Size | Size | Number | Concrete CY./Lin.Ft. | Reinforcing Steel Lbs./Lin.Ft. |
| 4' | 4'-0 | 2'-0 | 1'-6 | 1'-0 | 1-6 | 1 | 8'-0 | | #5 | 12" | 5'-6 | | | | | | | 3 | 3'-9 | #5 | 12" | #5 | 12" | | | #6 | | .432 | 34.7 |
| 5' | 4'-6 | 2'-0 | 1'-6 | 1'-0 | 2'-0 | 1 | 8'-0 | | #5 | 12" | 6'-6 | | | | | | | 4 | 4'-9 | #5 | 12" | #5 | 12" | #6* | | #6 | | .503 | 42.4 |
| 6' | 4'-9 | 2'-0 | 1'-9 | 1'-0 | 2'-0 | 1 | 8'-0 | | #5 | 12" | 7'-6 | | | | | | | 5 | 5'-9 | #5 | 12" | #5 | 12" | #6* | | #6 | | .556 | 45.1 |
| 7' | 5'-0 | 2'-0 | 1'-9 | 1'-0 | 2'-3 | 1 | 8'-0 | | #5 | 12" | 8'-6 | | | | | | | 6 | 6'-9 | #5 | 12" | #5 | 12" | #6* | | #6 | | .608 | 47.8 |
| 8' | 5'-6 | 2'-0 | 2'-0 | 1'-0 | 2'-6 | 1 | 8'-0 | | #5 | 9" | 9'-6 | | | | | | | 7 | 7'-9 | #5 | 12" | #5 | 12" | #7 | | #6 | | .679 | 62.1 |
| 9' | 5'-9 | 2'-0 | 2'-0 | 1'-0 | 2'-9 | 1 | 7'-6 | | #5 | 14" | 5'-0 | #5 | 14" | 12'-6 | | | | 8 | 8'-9 | #5 | 12" | #5 | 12" | #7 | | #6 | | .732 | 66.1 |
| 10' | 6'-3 | 2'-0 | 2'-3 | 1'-0 | 3'-0 | 1 | 7'-0 | | #5 | 11" | 5'-6 | #5 | 11" | 13'-6 | | | | 9 | 9'-9 | #5 | 11" | #5 | 11" | #7 | | #6 | 2 | .803 | 76.7 |
| 11' | 6'-6 | 2'-0 | 2'-3 | 1'-0 | 3'-3 | 1 | 6'-0 | | #7 | 12" | 7'-0 | #5 | 12" | 14'-6 | | | | 10 | 10'-9 | #5 | 9" | #5 | 9" | #7 | | #6 | 2 | .855 | 89.2 |
| 12' | 7'-3 | 2'-0 | 2'-6 | 1'-1 | 3'-8 | 1 | 5'-3 | | #8 | 14" | 7'-3 | #6 | 14" | 15'-6 | | | | 11 | 11'-9 | #5 | 7" | #5 | 7" | #6 | | #6 | 2 | .963 | 101.6 |
| 13' | 7'-6 | 2'-0 | 2'-6 | 1'-2 | 3'-10 | 1 | 4'-6 | | #8 | 12" | 7'-9 | #6 | 12" | 16'-6 | | | | 12 | 12'-9 | #5 | 6" | #6 | 9" | #6 | | #6 | 4 | 1.037 | 117.5 |
| 14' | 8'-0 | 2'-0 | 2'-9 | 1'-3 | 4'-0 | 2 | 8'-0 | 16'-0 | #8 | 13" | 8'-0 | #7 | 13" | 11'-9 | #5 | 13" | 7'-0 | 13 | 13'-9 | #6 | 13" | #6 | 6½" | #5 | | #6 | 4 | 1.133 | 121.6 |
| 15' | 8'-6 | 2'-0 | 2'-9 | 1'-4 | 4'-5 | 2 | 7'-0 | 16'-0 | #8 | 11" | 8'-0 | #7 | 11" | 12'-0 | #5 | 11" | 7'-9 | 14 | 14'-9 | #6 | 11" | #6 | 5½" | #5 | | #6 | 4 | 1.232 | 141.1 |
| 16' | 8'-9 | 2'-0 | 3'-0 | 1'-5 | 4'-4 | 2 | 6'-0 | 16'-0 | #9 | 12" | 10'-6 | #7 | 12" | 13'-3 | #5 | 12" | 7'-6 | 15 | 15'-9 | #6 | 9" | #7 | 9" | #5 | | #6 | 4 | 1.315 | 153.6 |
| 17' | 9'-0 | 2'-0 | 3'-0 | 1'-6 | 4'-6 | 2 | 5'-6 | 16'-0 | #9 | 11" | 11'-0 | #7 | 11" | 14'-0 | #5 | 11" | 7'-9 | 16 | 16'-9 | #7 | 11" | #8 | 11" | #5 | | #6 | 4 | 1.401 | 169.6 |
| 18' | 9'-3 | 2'-0 | 3'-3 | 1'-8 | 4'-4 | 2 | 5'-0 | 16'-0 | #9 | 12" | 11'-0 | #8 | 12" | 13'-9 | #6 | 12" | 9'-3 | 17 | 17'-9 | #7 | 8" | #7 | 8" | #5 | | #6 | 6 | 1.519 | 189.2 |
| 19' | 9'-6 | 2'-0 | 3'-3 | 1'-9 | 4'-6 | 2 | 4'-6 | 16'-0 | #10 | 12" | 12'-0 | #8 | 12" | 14'-9 | #6 | 12" | 9'-3 | 18 | 18'-9 | #7 | 8" | #8 | 9" | #5 | | #6 | 6 | 1.613 | 212.5 |
| 20' | 10'-0 | 2'-0 | 3'-6 | 1'-10 | 4'-8 | 2 | 4'-3 | 16'-0 | #10 | 11" | 12'-3 | #8 | 11" | 15'-3 | #6 | 11" | 9'-9 | 19 | 19'-9 | #7 | 5½" | #7 | 5½" | #5 | | #6 | 6 | 1.728 | 252.4 |

## CASE III – 2:1 SLOPING FILL

| DIMENSIONS | | | | | | PILE PATTERN | | | STEEL LIST | | | | | | | | | | | | | | | | | | QUANTITIES | |
|---|---|---|---|---|---|---|---|---|---|---|---|---|---|---|---|---|---|---|---|---|---|---|---|---|---|---|---|---|
| | | | | | | | | | s1 | | | s2 | | | s3 | | | h | v | b | | t | | p1 | p2 | p3 | f3 | | |
| H | W | B | C | F | E | Type | Sp 1 | Sp 2 | Size | Spacing | Length | Size | Spacing | Length | Size | Spacing | Length | Number ⌖ | Length | Size | Spacing | Size | Spacing | Size | Size | Size | Number ⌖ | Concrete CY./Lin.Ft. | Reinforcing Steel Lbs./Lin.Ft. |
| 4' | 4'-0 | 2'-0 | 1'-3 | 1'-0 | 1'-9 | 1 | 8'-0 | | #5 | 12" | 5'-6 | | | | | | | 3 | 3'-9 | #5 | 12" | #5 | 12" | | | | #6 | .432 | 34.7 |
| 5' | 4'-3 | 2'-0 | 1'-6 | 1'-0 | 1'-9 | 1 | 8'-0 | | #5 | 12" | 6'-6 | | | | | | | 4 | 4'-9 | #5 | 12" | #5 | 12" | #6* | | | #6 | .485 | 41.9 |
| 6' | 4'-6 | 2'-0 | 1'-6 | 1'-0 | 2'-0 | 1 | 8'-0 | | #5 | 12" | 7'-6 | | | | | | | 5 | 5'-9 | #5 | 12" | #5 | 12" | #6* | | | #6 | .537 | 44.6 |
| 7' | 4'-9 | 2'-0 | 1'-9 | 1'-0 | 2'-0 | 1 | 8'-0 | | #5 | 12" | 8'-6 | | | | | | | 6 | 6'-9 | #5 | 12" | #5 | 12" | #6* | | | #6 | .590 | 47.3 |
| 8' | 5'-0 | 2'-0 | 1'-9 | 1'-0 | 2'-3 | 1 | 8'-0 | | #5 | 12" | 9'-6 | | | | | | | 7 | 7'-9 | #5 | 12" | #5 | 12" | #7* | | | #6 | .642 | 51.6 |
| 9' | 5'-6 | 2'-0 | 2'-0 | 1'-0 | 2'-6 | 1 | 7'-6 | | #5 | 9" | 10'-6 | | | | | | | 8 | 8'-9 | #5 | 12" | #5 | 12" | #7 | | | #6 | .713 | 64.6 |
| 10' | 5'-9 | 2'-0 | 2'-0 | 1'-0 | 2'-9 | 1 | 6'-0 | | #5 | 14" | 5'-6 | #5 | 14" | 13'-6 | | | | 9 | 9'-9 | #5 | 12" | #5 | 12" | #7 | | | #6 | .765 | 68.6 |
| 11' | 6'-0 | 2'-0 | 2'-0 | 1'-0 | 3'-0 | 1 | 5'-0 | | #6 | 12" | 6'-0 | #5 | 12" | 14'-6 | | | | 10 | 10'-9 | #5 | 12" | #5 | 12" | #6 | | | #6 | .818 | 74.1 |
| 12' | 6'-6 | 2'-0 | 2'-3 | 1'-0 | 3'-3 | 2 | 8'-0 | 16'-0 | #7 | 11" | 6'-6 | #5 | 11" | 15'-6 | | | | 11 | 11'-9 | #5 | 11" | #6 | 11" | #6 | | | #7 | 2 | .890 | 93.0 |
| 13' | 6'-9 | 2'-0 | 2'-3 | 1'-1 | 3'-5 | 2 | 8'-0 | 16'-0 | #8 | 14" | 7'-6 | #6 | 14" | 16'-6 | | | | 12 | 12'-9 | #6 | 14" | #5 | 7" | #6 | | | #7 | 2 | .961 | 102.9 |
| 14' | 7'-0 | 2'-0 | 2'-6 | 1'-2 | 3'-4 | 2 | 7'-6 | 16'-0 | #8 | 12" | 7'-9 | #6 | 12" | 17'-6 | | | | 13 | 13'-9 | #6 | 12" | #5 | 6" | #6 | | | #7 | 2 | 1.037 | 116.7 |
| 15' | 7'-3 | 2'-0 | 2'-6 | 1'-3 | 3'-6 | 2 | 6'-3 | 16'-0 | #8 | 12" | 8'-0 | #7 | 12" | 11'-6 | #5 | 12" | 8'-3 | 14 | 14'-9 | #6 | 12" | #5 | 6" | #5 | | | #6 | 2 | 1.116 | 119.2 |
| 16' | 7'-6 | 2'-0 | 2'-6 | 1'-5 | 3'-7 | 2 | 5'-3 | 16'-0 | #8 | 11" | 8'-3 | #7 | 11" | 12'-0 | #5 | 11" | 8'-9 | 15 | 15'-9 | #6 | 11" | #7 | 11" | #5 | | | #6 | 4 | 1.222 | 131.8 |
| 17' | 8'-0 | 2'-0 | 2'-9 | 1'-6 | 3'-9 | 2 | 4'-6 | 16'-0 | #9 | 13" | 9'-9 | #8 | 13" | 12'-9 | #6 | 13" | 9'-3 | 16 | 16'-9 | #7 | 10" | #7 | 10" | #5 | | | #6 | 4 | 1.327 | 156.7 |
| 18' | 9'-0 | 2'-0 | 3'-0 | 1'-7 | 4'-5 | 3 | 6'-0 | 16'-0 | #10 | 13" | 10'-9 | #8 | 13" | 13'-3 | #6 | 13" | 9'-9 | 17 | 17'-9 | #6 | 6½" | #7 | 6½" | #5 | #5 | #6 | 4 | 1.472 | 192.8 |
| 19' | 9'-3 | 2'-0 | 3'-3 | 1'-9 | 4'-3 | 3 | 6'-0 | 16'-0 | #10 | 12" | 11'-3 | #8 | 12" | 13'-9 | #6 | 12" | 10'-3 | 18 | 18'-9 | #6 | 6" | #7 | 6" | #5 | #5 | #6 | 6 | 1.594 | 213.3 |
| 20' | 10'-0 | 2'-0 | 3'-6 | 1'-10 | 4'-8 | 3 | 5'-9 | 16'-0 | #10 | 11" | 11'-9 | #8 | 11" | 14'-3 | #6 | 11" | 10'-9 | 19 | 19'-9 | #6 | 5½" | #7 | 5½" | #5 | #5 | #6 | 6 | 1.728 | 239.6 |

* Top p1 bars Omitted

## CASE IV – 1½:1 SLOPING FILL

| DIMENSIONS | | | | | | PILE PATTERN | | | STEEL LIST | | | | | | | | | | | | | | | | | | QUANTITIES | |
|---|---|---|---|---|---|---|---|---|---|---|---|---|---|---|---|---|---|---|---|---|---|---|---|---|---|---|---|---|
| | | | | | | | | | s1 | | | s2 | | | s3 | | | h | v | b | | t | | p1 | p2 | p3 | f3 | | |
| H | W | B | C | F | E | Type | Sp 1 | Sp 2 | Size | Spacing | Length | Size | Spacing | Length | Size | Spacing | Length | Number ⌖ | Length | Size | Spacing | Size | Spacing | Size | Size | Size | Number ⌖ | Concrete CY./Lin.Ft. | Reinforcing Steel Lbs./Lin.Ft. |
| 4' | 4'-0 | 2'-0 | 1'-6 | 1'-0 | 1'-6 | 1 | 8'-0 | | #5 | 12" | 5'-6 | | | | | | | 3 | 3'-9 | #5 | 12" | #5 | 12" | | | | #6 | .432 | 34.7 |
| 5' | 4'-6 | 2'-0 | 1'-6 | 1'-0 | 2'-0 | 1 | 8'-0 | | #5 | 12" | 6'-6 | | | | | | | 4 | 4'-9 | #5 | 12" | #5 | 12" | #6* | | | #7 | .503 | 45.7 |
| 6' | 5'-0 | 2'-0 | 1'-9 | 1'-0 | 2'-3 | 1 | 8'-0 | | #5 | 12" | 7'-6 | | | | | | | 5 | 5'-9 | #5 | 12" | #5 | 12" | #6* | | | #7 | .574 | 48.9 |
| 7' | 5'-6 | 2'-0 | 2'-0 | 1'-0 | 2'-6 | 1 | 6'-0 | | #5 | 11" | 8'-6 | | | | | | | 6 | 6'-9 | #5 | 12" | #5 | 12" | #6 | | #6 | | .645 | 54.2 |
| 8' | 6'-0 | 2'-0 | 2'-0 | 1'-0 | 3'-0 | 1 | 4'-9 | | #6 | 10" | 9'-6 | | | | | | | 7 | 7'-9 | #5 | 12" | #5 | 12" | #6 | | #6 | | .716 | 63.8 |
| 9' | 6'-3 | 2'-0 | 2'-0 | 1'-0 | 3'-3 | 2 | 7'-0 | 16'-0 | #6 | 11" | 5'-6 | #5 | 11" | 12'-6 | | | | 8 | 8'-9 | #5 | 11" | #5 | 11" | #5 | | #7 | 2 | .769 | 74.4 |
| 10' | 6'-6 | 2'-0 | 2'-3 | 1'-0 | 3'-3 | 2 | 5'-9 | 16'-0 | #7 | 11" | 6'-6 | #5 | 11" | 13'-6 | | | | 9 | 9'-9 | #5 | 11" | #6 | 11" | #5 | | #7 | 2 | .821 | 85.7 |
| 11' | 7'-0 | 2'-0 | 2'-6 | 1'-1 | 3'-5 | 2 | 4'-9 | 16'-0 | #8 | 12" | 6'-9 | #6 | 12" | 14'-6 | | | | 10 | 10'-9 | #5 | 9" | #6 | 9" | #5 | | #7 | 2 | .909 | 102.2 |
| 12' | 7'-6 | 2'-0 | 2'-6 | 1'-3 | 3'-9 | 2 | 4'-0 | 16'-0 | #8 | 12" | 6'-6 | #7 | 12" | 10'-0 | #5 | 12" | 6'-9 | 11 | 11'-9 | #6 | 9" | #7 | 9" | #5 | | #8 | 4 | 1.019 | 124.5 |
| 13' | 8'-3 | 2'-0 | 2'-6 | 1'-4 | 4'-5 | 2 | 3'-3 | 16'-0 | #9 | 12" | 9'-0 | #7 | 12" | 11'-0 | #5 | 12" | 6'-9 | 12 | 12'-9 | #6 | 9" | #8 | 9" | #5 | | #8 | 4 | 1.133 | 150.9 |
| 14' | 8'-6 | 2'-0 | 2'-9 | 1'-6 | 4'-3 | 2 | 3'-0 | 6'-0 | #9 | 11" | 9'-6 | #7 | 11" | 11'-6 | #5 | 11" | 7'-3 | 13 | 13'-9 | #7 | 9" | #8 | 9" | #5 | | #6 | 4 | 1.235 | 161.2 |
| 15' | 9'-0 | 2'-0 | 3'-0 | 1'-8 | 4'-4 | 3 | 3'-9 | 16'-0 | #9 | 12" | 9'-9 | #8 | 12" | 11'-9 | #6 | 12" | 8'-3 | 14 | 14'-9 | #7 | 9" | #7 | 6" | #5 | #5 | #6 | 4 | 1.361 | 179.8 |
| 16' | 9'-3 | 2'-0 | 3'-3 | 1'-9 | 4'-3 | 3 | 3'-6 | 16'-0 | #10 | 12" | 10'-9 | #8 | 12" | 12'-9 | #6 | 12" | 8'-3 | 15 | 15'-9 | #8 | 9" | #7 | 6" | #5 | #5 | #6 | 6 | 1.451 | 207.0 |
| 17' | 9'-9 | 2'-0 | 3'-3 | 1'-11 | 4'-7 | 3 | 3'-0 | 16'-0 | #10 | 11" | 11'-0 | #8 | 11" | 13'-3 | #6 | 11" | 8'-9 | 16 | 16'-9 | #8 | 8" | #9 | 8" | #5 | #5 | #6 | 6 | 1.588 | 237.3 |
| 18' | 10'-3 | 2'-1 | 3'-6 | 2'-1 | 4'-8 | 3 | 3'-0 | 7'-0 | #10 | 10" | 11'-3 | #8 | 10" | 13'-9 | #6 | 10" | 9'-3 | 17 | 17'-9 | #8 | 6" | #8 | 6" | #5 | #5 | #5 | 6 | 1.763 | 269.8 |

⌖ Total number of bars in the cross-section.

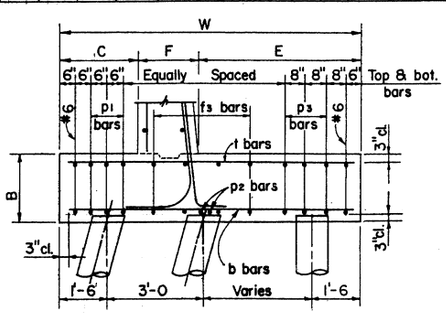


FOOTING STEEL DETAIL

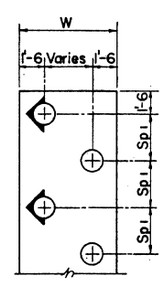


TYPE 1

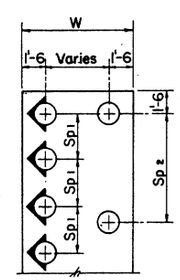


TYPE 2

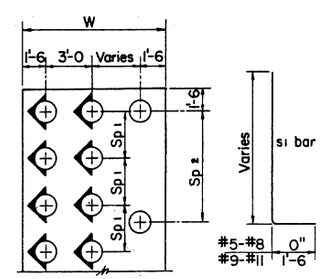


TYPE 3 BEND

⊕ Vertical Pile ⌖ Battered Pile

NOTES:

All Piles shall be 14" ⌖ Cast-in-place or Precast Concrete, see B-20.10.
Piling shall be driven to a minimum bearing of 45 tons.
Maximum shear resistance of each pile is assumed to be 15 kips.
If the soil immediately below the pile cap is unstable or poorly consolidated, The pile pattern shall be checked.
All h, v, and f3 bars shall be #4 spaced as shown.
See B-18.10 for General Notes and all other Details.

| | | | |
|---|---|---|---|
| DESIGN | | | |
| DRAWN | RDS | 2-73 | |
| CHECKED | MAB | 3-73 | |
| DATE | MADE BY | NO. | DESCRIPTION OF REVISIONS |

| DESIGN APPROVED | ARIZONA DEPARTMENT OF TRANSPORTATION HIGHWAYS DIVISION STANDARD PLANS | REVISION |
|---|---|---|
| APPROVED FOR DISTRIBUTION | CANTILEVER RETAINING WALLS ON CONCRETE PILES | STANDARD NO. RW-4 |
| | | PLAN NO. B-18.40 |

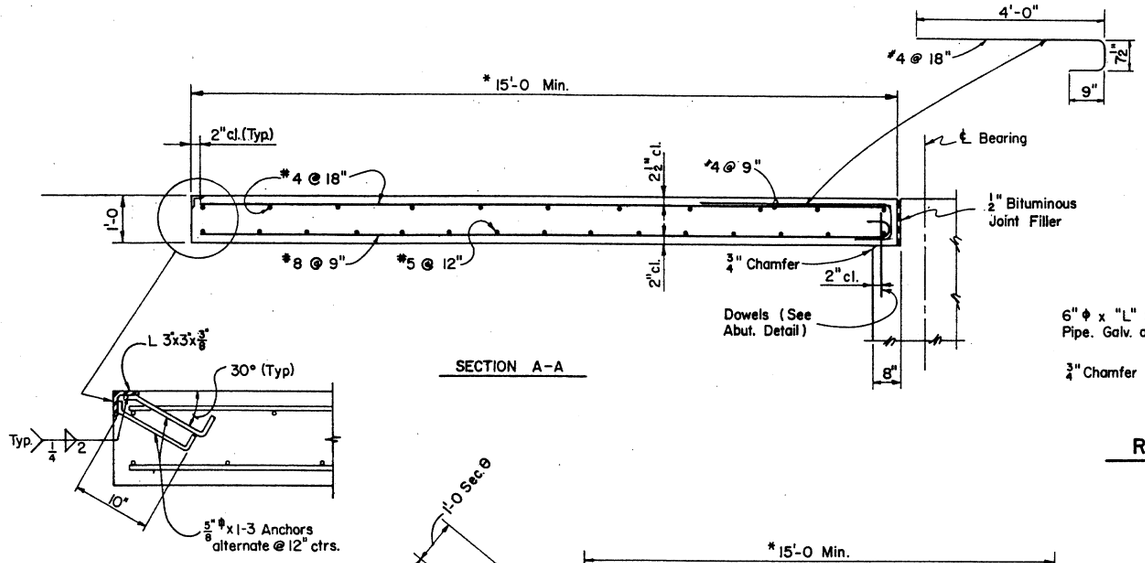


SECTION A-A

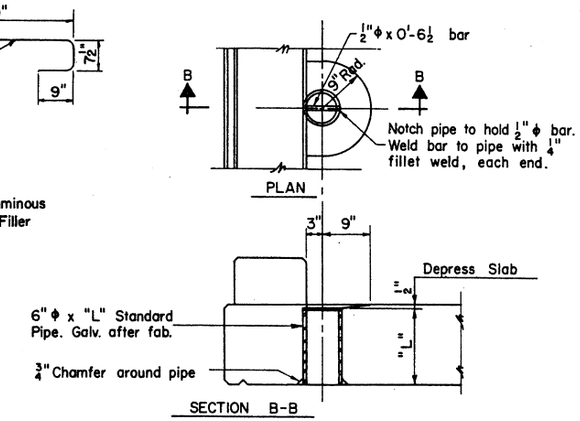


SECTION B-B

## ROADWAY DRAIN DETAIL

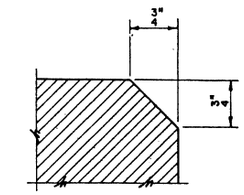


Chamfer all exposed corners thus unless otherwise noted. This note applicable to all sheets pertaining to the structure.

## CHAMFER DETAIL

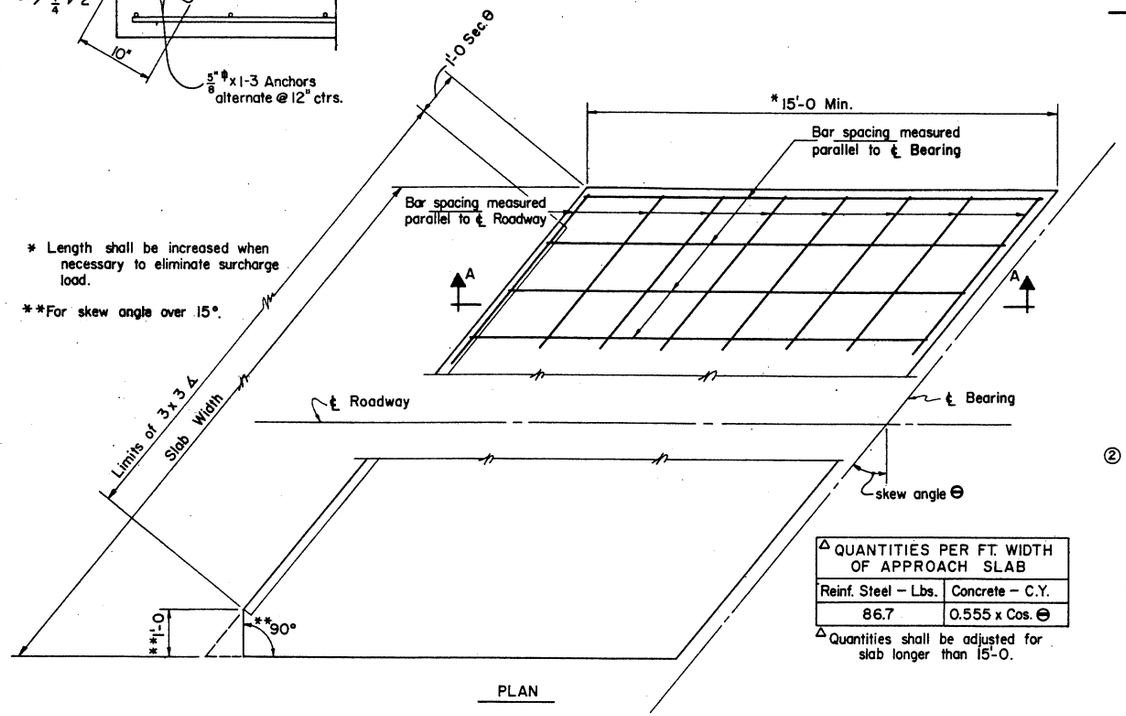


* Length shall be increased when necessary to eliminate surcharge load.

**For skew angle over 15°.

PLAN

## APPROACH SLAB

| △ QUANTITIES PER FT. WIDTH OF APPROACH SLAB | |
|---|---|
| Reinf. Steel – Lbs. | Concrete – C.Y. |
| 86.7 | 0.555 x Cos. θ |

△ Quantities shall be adjusted for slab longer than 15'-0.

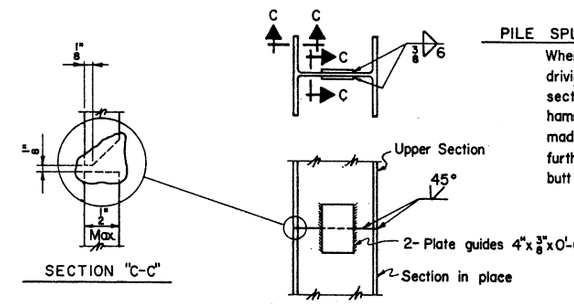


## PILE SPLICE DETAIL

PILE SPLICE NOTE

When piling is to be spliced for further driving, upper section shall be lowered on section in place and tapped lightly with hammer to full bearing before butt welds are made. When piling is to be extended without further driving, omit guide plates and make butt welds continuous across web.

② PILE POINT NOTE – (only when required on plans)

Manufactured pile points shall be attached by means of a single bevel groove weld across the full width of each exterior face of the flanges of the pile.

The flanges of the pile shall be prepared by flame cutting a 45 degree bevel at the bottom edge of each exterior face of flanges. —

45 degree bevel size shall be 1/2 the flange thickness. Groove welds shall be 5/16" for all HP piles 8" thru 14", except HP 13 X 100 and HP 14 X 102 shall be 3/8" and HP 14 X 117 shall be 7/16".

GENERAL NOTES

Concrete shall be class "S" f'c = 3000 psi

Reinforcing steel shall conform to ASTM Spec. A615.
Bar sizes #7 and smaller shall be Grade 40.
Bar sizes #8 and larger shall be Grade 60.

Welding shall conform to American Welding Society Specifications For Structural Welding, latest edition.

Roadway drains shall conform to A.S.T.M. Specifications A53, type S, grade "B". Galvanize after fabrication in accordance with A.S.T.M. Specifications A123.

① NOTES

Structural steel shall conform to ASTM Specification A36.

Paint and painting shall conform to Std. Specifications. Contact surfaces shall not be painted. Structural steel - Shop - 1 coat paint #1A or #1B, #3 and #10. No field paint required.

| DESIGN | JBS | 2-73 |
|---|---|---|
| DRAWN | RDS | 3-73 |
| CHECKED | NAB, DHY | 3-73 |

| NO. | DESCRIPTION OF REVISIONS | MADE BY | DATE |
|---|---|---|---|
| ① | Added Struct. steel & painting note | J T W | 7-76 |
| ② | Added Pile Point Note | WEB | 2-81 |
| ③ | | | |

| DESIGN APPROVED | ARIZONA DEPARTMENT OF TRANSPORTATION HIGHWAYS DIVISION STANDARD PLANS | REVISION |
|---|---|---|
| APPROVED FOR DISTRIBUTION | MISCELLANEOUS DETAILS FOR BRIDGES | STANDARD NO. BM-1 |
| | | PLAN NO. B-19.10 |

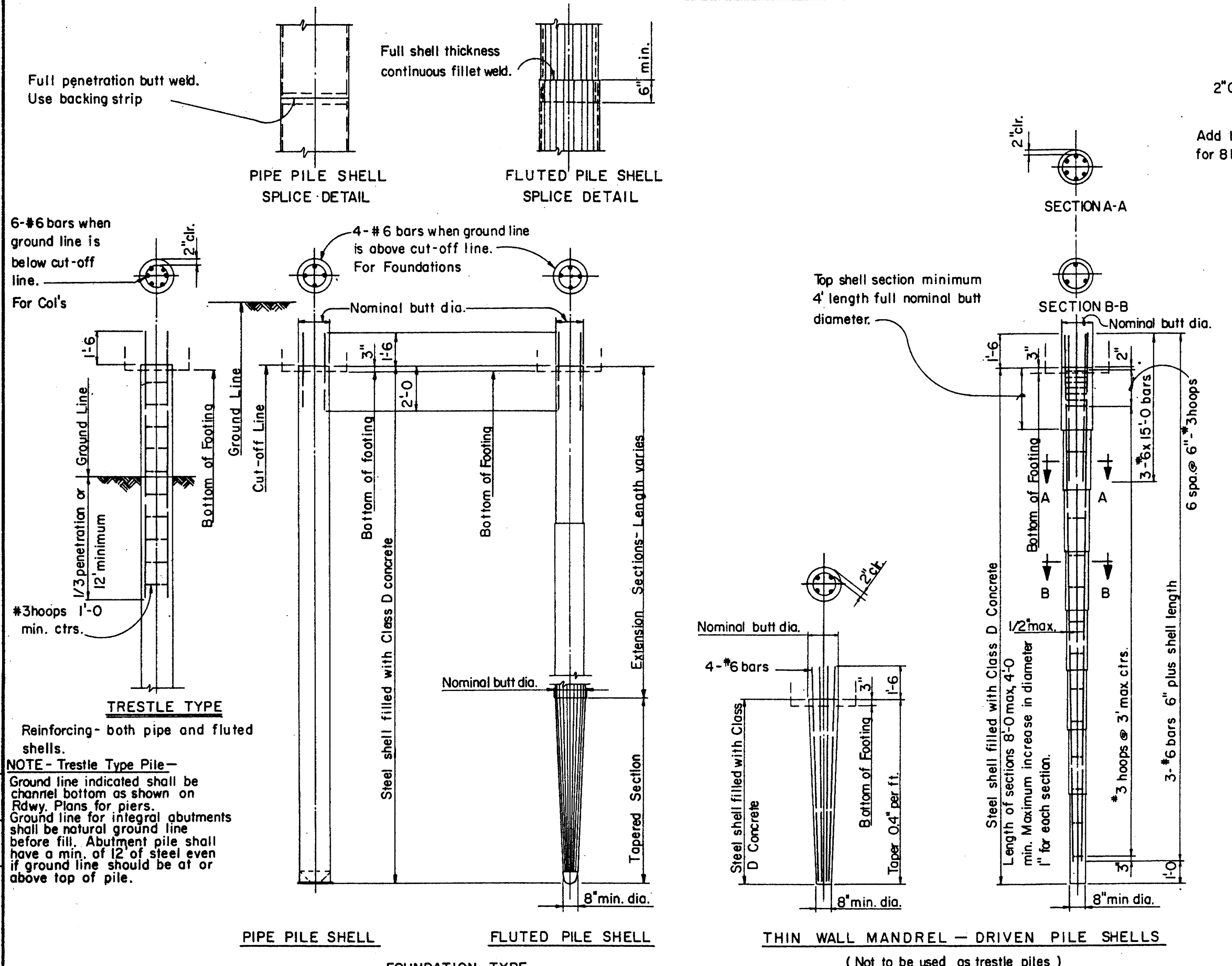


## CAST - IN - PLACE CONCRETE PILES

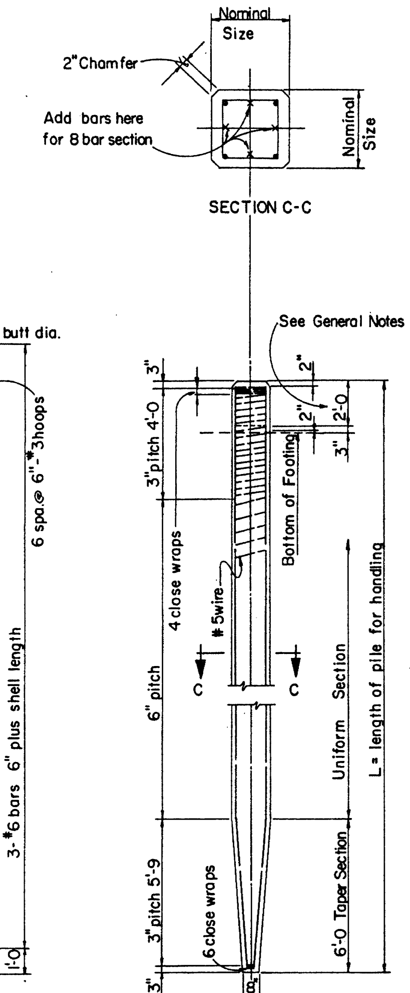


## PRECAST CONCRETE PILES

## GENERAL NOTES

PRECAST AND CAST-IN-PLACE PILES

Design - AASHO Standard Specifications for Highway Bridges 1977.

Construction - Arizona Highway Department Standard Specification 1969,revised to date.

Reinforcing Steel shall conform to ASTM Spec.A615 Grade 40.

Spiral reinforcing shall be cold drawn wire conforming to ASTM Spec. A82.

PRECAST PILES

Precast piles shall be cast 2'-0 longer than net required length, or approved driving head provided. After driving to a depth satisfactory to the Engineer, the excess length shall be trimmed off to 3" above the bottom of the footing and the pile edges beveled. Vertical reinforcement shall be cut off to provide 1'-6 embedment. If extended pile is to be driven further, the longitudinal steel shall be lapped 40 diameters for the splice. Concrete for precast piles shall be Class A-A, internally vibrated.

CAST-IN-PLACE PILES

Contractor shall be responsible for furnishing shells and waterproof end closure of sufficient strength to drive without distortion, damage or leakage. Type of end closure shall be chosen by contractor to suit driving conditions, and shall not exceed shell diameter plus 1/2". Shells shall be driven only with manufacturer's standard driving head and, if necessary, with a driving mandrel.

Mill inspection of all shells shall conform to current Standard Specifications.

All shells shall be filled to cut off elevation with Class S concrete internally vibrated. ($f'_c$ = 3000 psi)

Trestle bent piles shall have a minimum butt diameter of 14".

All pile material shall be new or unused.

PRECAST PILE PICK-UP NOTE: Pick-up points shall be plainly marked on all piles after removal of forms unless special lifting devices are attached for pick-up and all lifting shall be done at these points.

The use of special embedded or attached lifting devices, the employment of other pick-up points or any other method of pick-up shall be subject to approval by the Engineer.

CAST - IN - PLACE CONCRETE PILES

| Type of shell | Min. shell thickness | Pile Shell Specifications |
|---|---|---|
| Pipe | .164 in. | ASTM A252- 50,000 psi min. Ult. |
| Fluted | 9 guage | SAE 1010 or 1015-50,000 psi min. Ult. |
| Mandrel Driven | 18 guage | Manufacturer's standard sheet steel. |

PRECAST CONCRETE PILES

| Pile Size | No. of Bars & Size | Approx. Wt. per Lin. Ft. | Area of nominal cross-sect | Max. Length L for 1 point pick-up | Max. Length L for 2 point pick-up |
|---|---|---|---|---|---|
| 14" | 4-#8 | 205# | 196□" | 44' | 66' |
| 16" | 4-#9 | 265 | 256 | 46 | 70 |
| 18" | 8-#7 | 335 | 324 | 49 | 74 |

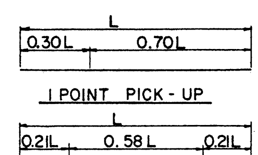


| DESIGN | DRAWN | CHECKED | NO | DESCRIPTION OF REVISIONS | MADE BY | DATE |
|---|---|---|---|---|---|---|
| CAG | 1-73 | | ① | | | |
| WO | 3-73 | | ② | | | |
| | | | ③ | | | |

DESIGN APPROVED R.L. Brechler

APPROVED FOR DISTRIBUTION

ARIZONA DEPARTMENT OF TRANSPORTATION HIGHWAYS DIVISION STANDARD PLANS

PRECAST AND CAST-IN-PLACE CONCRETE PILES

REVISION

STANDARD NO. CP-1

PLAN NO. B-20.10

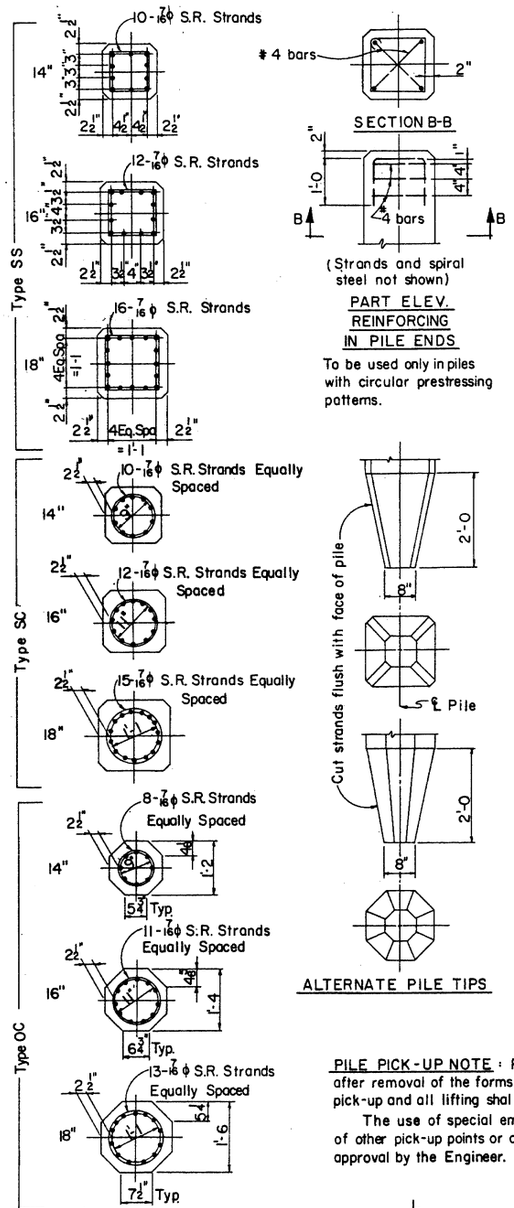


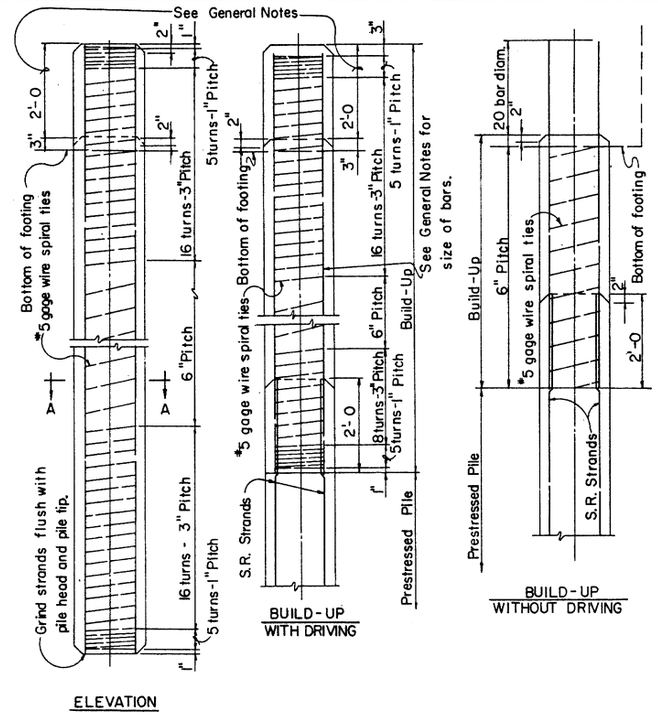


## GENERAL NOTES

DESIGN - AASHO Standard Specifications For Highway Bridges 1977.

CONSTRUCTION- Standard Specifications of the Arizona Highway Department Edition 1969. All construction Specifications for precast concrete piling shall apply except as otherwise noted here.

CONCRETE- Concrete in the prestressed pile shall be Class S and shall have a minimum compressive cylinder strength ( $f'c$ ) of 5000 psi at 28 days. Compressive cylinder strength at transfer of prestressing force shall be not less than 4000 psi. Piles may be removed from casting bed to nearby storage anytime after transfer of stress. Shipment from plant site or driving will not be permitted until full compressive cylinder strength is reached. Concrete in Build-Ups shall be Class A-A internally vibrated having a minimum compressive cylinder strength ( $f'c$ ) of 2800 psi at 28 days. Build-Ups with driving shall have reached full compressive cylinder strength before driving starts.

MILD STEEL REINFORCING- Spiral reinforcement shall be cold drawn wire conforming to ASTM, A-82. All other mild reinforcement shall be in accordance with ASTM, A-615 Grade 40.

PRESTRESSING REINFORCING - Seven-wire stress relieved strand conforming to the requirements of ASTM, A-416 shall be used. In general the unit prestress after losses shall not exceed $0.2f'c$. Initial tension in strands before release shall be as follows:

3/8"φ Strands - 14,000#
7/16"φ Strands - 18,900#
1/2"φ Strands - 25,200#

The unit prestress after losses shall be not less than 700 psi.

TOLERANCES- Pile ends shall be plane surfaces and perpendicular to axis of pile. The maximum sweep (deviation from straightness measured along two perpendicular faces of the pile, while not subject to bending forces) shall not exceed 1/8" in any 10' of its length, 3/8" in any 40' or 3/16" x (total length in ft.) ÷ 20 feet.

BUILD-UPS- Build-ups as detailed may be used only if specified or authorized by the Engineer. Attachment of the build-up to the pile shall be by the same methods given for pile heads except that edges need not be beveled. If the joint is subject to conditions which would cause deterioration, suitable steps satisfactory to the Engineer shall be taken to protect the joint. The minimum area of vertical reinforcing steel shall be 1-1/2 % of the gross cross-section of concrete. Bars shall be placed in a symmetrical pattern of not less than four bars.

PILE HEADS- Prestressed piles shall be cast 2'-0 longer than net required length. After driving to a depth satisfactory to the Engineer the excess length shall be cut off on a plane normal to the axis of the pile and the pile edges beveled. Prestressing strands shall be cut off to provide 2'-0 embedment into cap, footing or build-up. Any concrete at the pile head damaged below cut off elevation in driving shall be removed to solid material and built-up to cut off elevation. If the pile head is a built-up section, it shall be trimmed same as a pre-stressed section and the vertical bars cut off to provide 20 diameters embedment into the cap or footing.

FORMS- The use of steel forms on concrete founded casting beds is required unless otherwise approved in advance by the Engineer. Outer forms shall enclose all except top horizontal surface. The side forms may have a maximum draft on each side not exceeding 1/4" per foot. All corners shall be chamfered to 1-1/2" or rounded to 2" radius. Forms for piles shall be such as to avoid the formation of fins at intersection of surfaces. Top of concrete casting shall be given a uniformly smooth finish to match the finish surface of the formed sides.

PILE PICK-UP NOTE: Pick-up points shall be plainly marked on all piles after removal of the forms unless special lifting devices are attached for pick-up and all lifting shall be done at these points.

The use of special embedded or attached lifting devices, the employment of other pick-up points or any other method of pick-up shall be subject to approval by the Engineer.

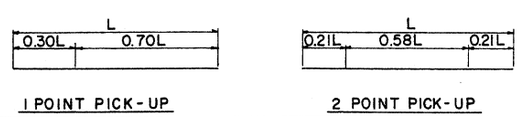


1 POINT PICK-UP

2 POINT PICK-UP

SQUARE PILE PROPERTIES

| Pile Size | No. and size of S.R. Strands | | Unit Prestress after losses | | Approx. Wt per Lin. Ft. | Area of nominal cross-section | Section modulus of cross-section | Max. Lgth "L" * 1 Point Pick-Up | | Max Lgth "L" * 2 Point Pick-Up | |
|---|---|---|---|---|---|---|---|---|---|---|---|
| | Square Pattern | Circular Pattern | Square Pattern | Circular Pattern | | | | Square Pattern | Circular Pattern | Square Pattern | Circular Pattern |
| 14 | 10-7/16φ | 10-7/16φ | 771psi | 771psi | 205# | 196 $\square$" | 457 in³ | 57' | 57' | 82' | 82' |
| 16 | 12-7/16φ | 12-7/16φ | 709 | 709 | 265 | 256 | 683 | 60 | 60 | 85 | 85 |
| 18 | 16-7/16φ | 15-7/16φ | 747 | 700 | 335 | 324 | 972 | 64 | 63 | 92 | 90 |

*The length "L" is the distance end to end of pile including alternate pile tip used. Tabulated lengths may be used for minimum pick-up lengths when the concrete has attained a compressive cylinder strength of 5,000 psi. If piles are picked up when the concrete strength is less than 5,000 psi, the maximum pick-up length shall be the tabulated length reduced by 3%.

OCTAGON PILE PROPERTIES

| Pile Size | No. & size of S.R. Strands | Unit Pre-stress after losses | Approx. Wt. per Lin. Ft. | Area of nominal cross sect. | Section modulus of cross sect. | Max. lgth "L" * 1 point pick-up | Max. lgth "L" * 2 point pick-up |
|---|---|---|---|---|---|---|---|
| 14 | 8-7/16φ | 747 psi | 170# | 162 ⌀" | 301 in³ | 50' | 72' |
| 16 | 11-7/16φ | 785 | 220 | 212 | 449 | 55 | 78 |
| 18 | 13-7/16φ | 733 | 280 | 268 | 639 | 57 | 81 |

| NO. | DESCRIPTION OF REVISIONS | MADE BY | DATE |
|---|---|---|---|
| 1 | | | |
| 2 | | | |
| 3 | | | |

DESIGN
DRAWN C.A.G. 1-73
CHECKED W.O. 3-73

DESIGN APPROVED R.E. Brechler

APPROVED FOR DISTRIBUTION E.T. Franklin

ARIZONA DEPARTMENT OF TRANSPORTATION HIGHWAYS DIVISION STANDARD PLANS

PRESTRESSED CONCRETE PILES

REVISION

STANDARD NO. CP-2

PLAN NO. B-20.20

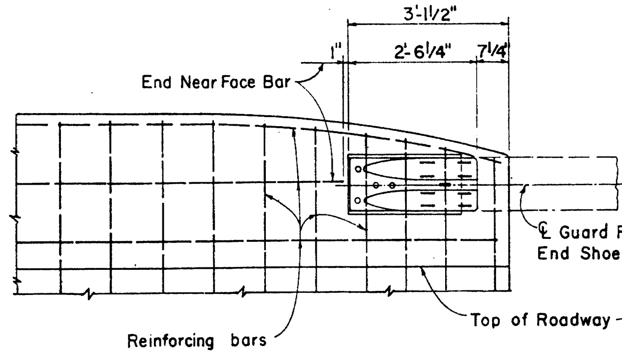


ROADWAY ELEVATION

Showing Guard Rail Shoe Connection
Scale: 3/4" = 1'- 0"

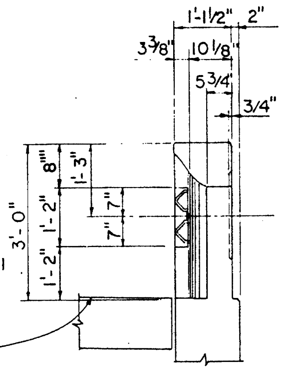


END ELEVATION OF DADO

Scale: 3/4" = 1'- 0"

GENERAL NOTES.

All dadoes shall be provided with Guard Rail connections for structures carrying two way traffic.

Only dadoes at the approach end shall be provided with Guard Rail connections for structures carrying one way traffic.

For dadoes without Guard Rail connections the inside face of dado shall be similar to the outside face.

Connect End Shoe to dado with 7/8" ϕ high strength bolts set in internally threaded tubular expansion anchors having an externally slit expansion element and a single cone expander. Tensile proof test load in 2500 psi concrete shall be 6500 Lbs. or more.

The Guard Rail End Shoe shall be 10 gage steel and galvanized after fabrication in accordance with A.S.T.M. Spec's A123.

For all other dado details, see Abutment Sheets.

Guard Rail End Shoe shall be furnished and installed with roadway approach guardrail.

The 7/8"ϕ high strength bolts shall be galvanized in accordance with A.S.T.M. Spec's A153.

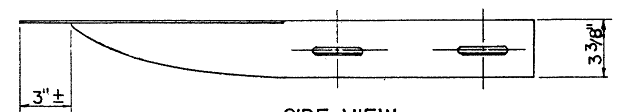


SIDE VIEW

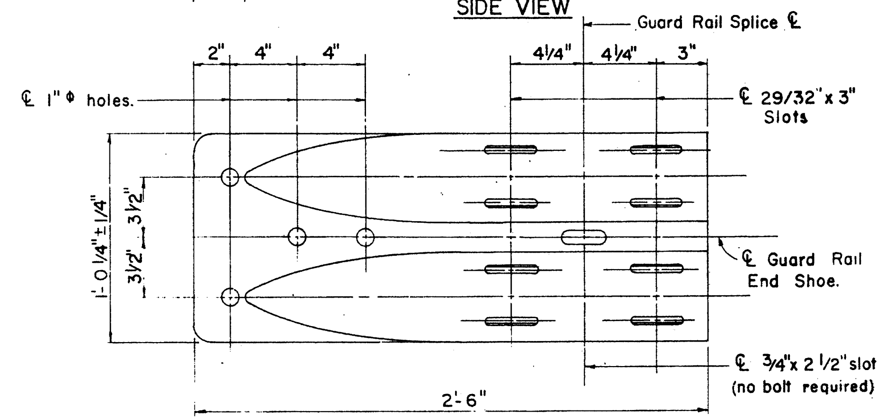


PLAN

GUARD RAIL END SHOE DETAIL

Scale: 3" = 1'- 0"

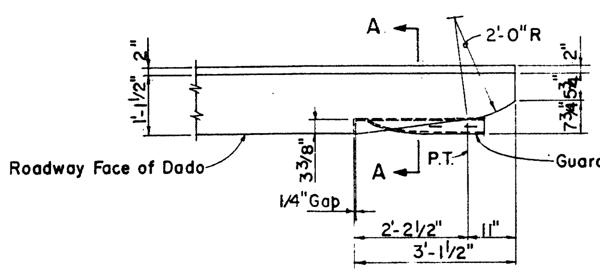


PLAN OF DADO

Showing Guard Rail Shoe Connection
Scale: 3/4" = 1'- 0"

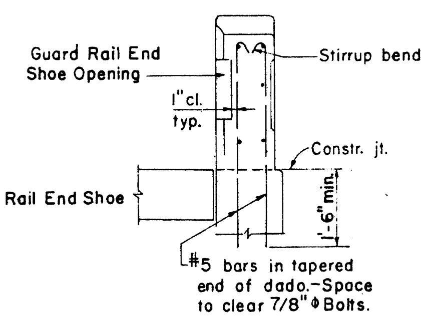


SECTION A-A

Scale: 3/4" = 1'-0"

| DESIGN | DRAWN | CHECKED | NO | DESCRIPTION OF REVISIONS | MADE BY | DATE |
|---|---|---|---|---|---|---|
| | MAH | 11-69 | 1 | | | |
| | | | 2 | | | |
| | | | 3 | | | |

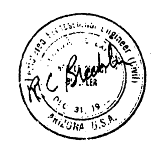

| DESIGN APPROVED | ARIZONA DEPARTMENT OF TRANSPORTATION HIGHWAYS DIVISION STANDARD PLANS | REVISION |
|---|---|---|
| R.C. Bruchler | | |
| APPROVED FOR DISTRIBUTION | GUARD RAIL END SHOE DADO CONNECTION | STANDARD NO. GD-1 |
| [signature] | | PLAN NO. B-21.10 |

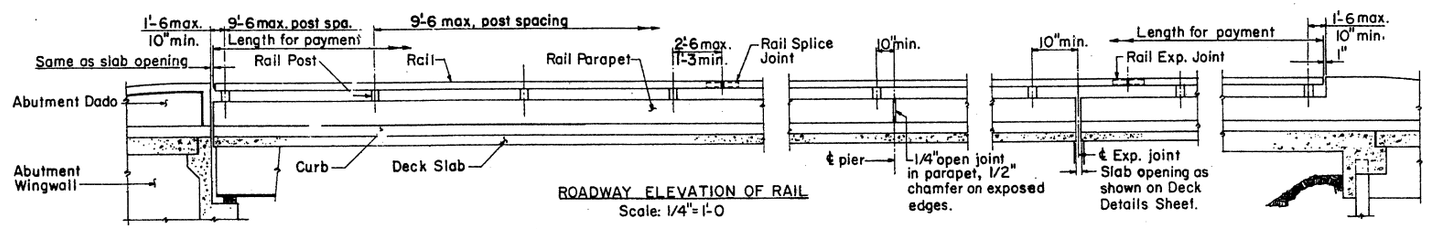


ROADWAY ELEVATION OF RAIL
Scale: 1/4" = 1'-0

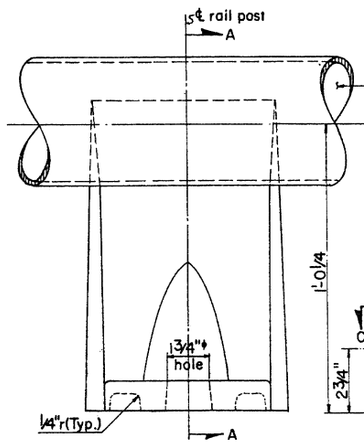


FRONT VIEW
Scale: 3/8" = 1"

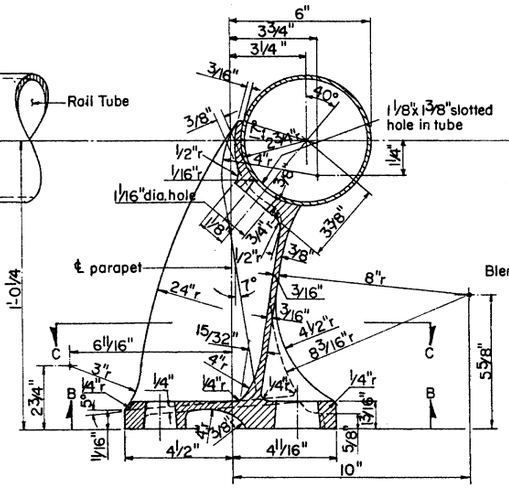


SECTION A-A
Scale: 3/8" = 1"

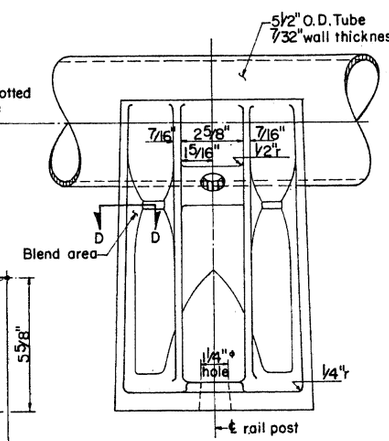


REAR VIEW
Scale: 3/8" = 1"

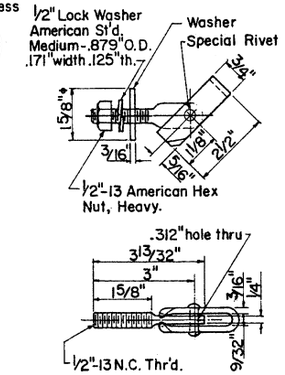


TOGGLE BOLT ASSEMBLY
Scale: 1/2" = 1"

## MATERIALS

At the option of the contractor, tubing and rail posts shall be either galvanized steel or aluminuin. Material for metal handrail shall be as follows:

Aluminum Tubing: Alloy 6061-T6, ASTM Specification B221.

Steel Tubing: ASTM A36 or ASTM A53, Grade A or B; galvanized after fabrication in accordance with ASTM A123.

Cast Aluminum Posts: AASHO M193 (Alloy A444-T4).

Cast Steel Posts: AASHO M192, Class 70; galvanized in accordance with ASTM A123.

Toggle Bolt Assembly: Toggle Bolt-1335 C.R. steel heat treated RC 32-38, ASTM A354; Toggle-1015 H.R. steel, ASTM A303; Washer-SAE 1020 H.R. steel plate, ASTM A7; Nut-1035 C.R. steel heat treated, ASTM A325, Grade 2H; Special Rivet-1038 C.R. steel heat treated, ASTM A195. All parts shall be cadmium plated type NS .0005" thick, ASTM A165.

Anchor Bolts, Nuts, and Washers: ASTM A325, galv. in accordance with ASTM A153.

## GENERAL NOTES

Design: AASHO 1973. Specifications for Highway Bridges.

All posts shall be normal to parapet.

All open ends of rail members shall be capped.

For horizontal curves of radius less than 2000 ft., the rail member shall be fabricated to follow the curvature of the roadway.

All post dimensions shown are minimum.

Panel lengths of rail shall be attached to a minimum of three posts. All joints in railing shall be spliced as detailed.

Rail posts shall be seated on at least one shim having dimensions as shown. Additional shims or half-shims may be used in shimming for alignment. These shims shall be 1/16" in thickness and made of tightly twisted asbestos yarn spun with brass wire, woven into Asbestos-Metallic cloth and impregnated with a rubber heat-resisting compound.

At the centerline of each pier there shall be a 1/4" open joint in the parapet. The reinforcing steel in the parapet shall be discontinuous at this joint. If a rail post falls within 10" of this joint, the joint shall be relocated so as to maintain a 10" minimum between it and centerline of rail post.

Anchor bolts shall be preset in concrete. For spacing of rail posts see Project Plans.

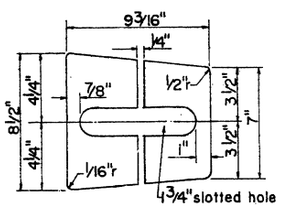


SHIM DETAIL
Scale: 1/4" = 1"

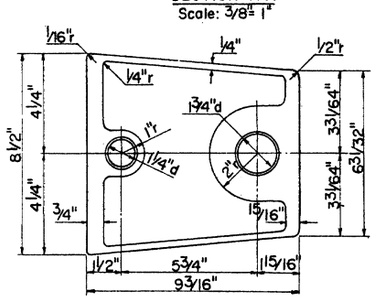


VIEW B-B
Scale: 3/8" = 1"

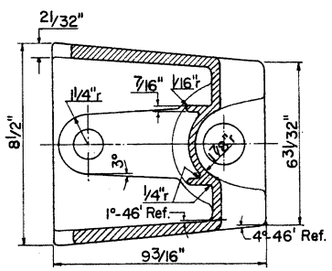


SECTION C-C
Scale: 3/8" = 1"

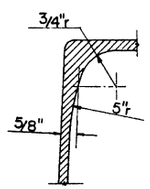


SECTION D-D
Scale: 3/4" = 1"

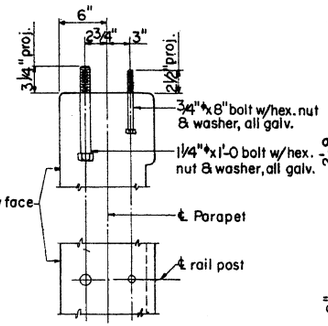


RAIL POST ANCHOR BOLT LAYOUT
Scale: 1 1/2" = 1'-0

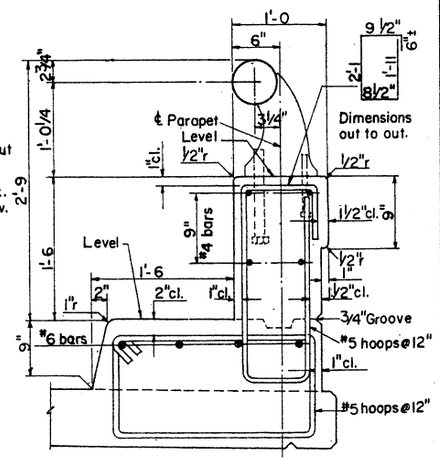


PARAPET DETAILS
Scale: 1 1/2" = 1'-0

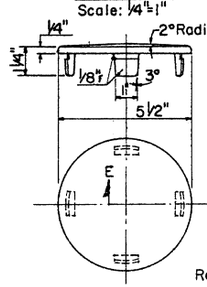


RAIL CAP
Scale: 3/8" = 1"

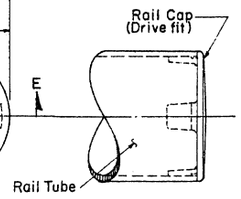


RAIL CAP CONNECTION
Scale: 3/8" = 1"

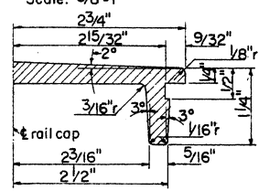


SECTION E-E
Full Scale

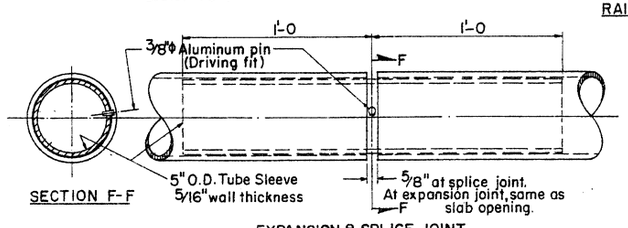


SECTION F-F

EXPANSION & SPLICE JOINT
Scale: 3" = 1'-0

| | | | | | |
|---|---|---|---|---|---|
| DESIGN | R.C.B. | 10-64 | NO. | DESCRIPTION OF REVISIONS | MADE BY | DATE |
| DRAWN | R.W.B. | 11-64 | 1 | | | |
| CHECKED | A.G.S. | 11-64 | 2 | | | |
| | | | 3 | | | |

4-1-66 Revised bolt specs from ASTM A175 to A153. Added Aluminum Rail Specs AASHO M193-61. Aluminum tubing alloy 6062-T6 deleted.

Add "post" to note "All dim. shown are min." Rev. 3/4" proj. to 3 1/2" proj. for 1 1/4" anchor bolts. Rev. 3" proj. to 2 1/2" proj. for 3/4" anchor bolts.

| | |
|---|---|
| DESIGN APPROVED R.C. Buehler | ARIZONA DEPARTMENT OF TRANSPORTATION HIGHWAYS DIVISION STANDARD PLANS |
| APPROVED FOR DISTRIBUTION E.H. Sandelin | SINGLE-RAIL HANDRAIL |

REVISION

STANDARD NO. H-1-1

PLAN NO. B-22.10

Rev. only Spec. from ASTM A123 to A153.
Rev. Rail Anchor Bolt assembly.
Rev. 2" proj. to 2¼" for ½" ϕ anchor bolts.

4-1-66. Added "Post" to note "All dimensions are min.
Added Alum. Post Spec. AASHO M193-64 I.
Alum. Tubing 6061-T6 deleted.

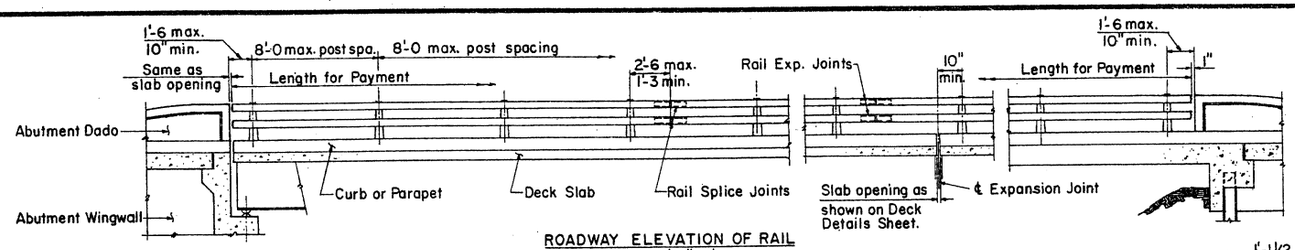


ROADWAY ELEVATION OF RAIL
Scale: 1/4" = 1'-0

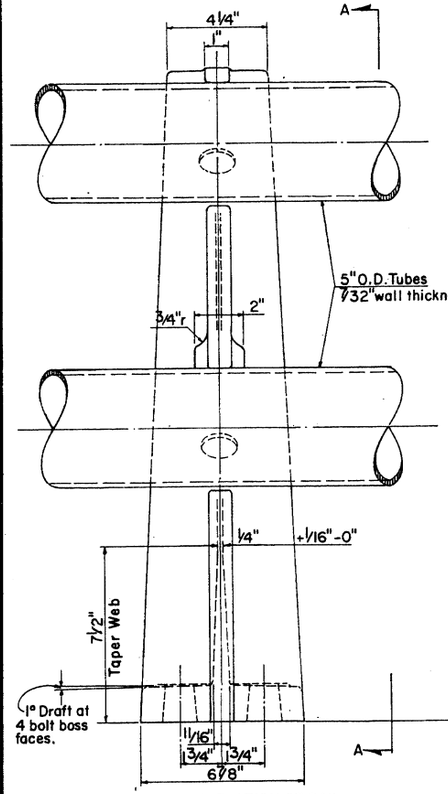


ROADWAY ELEVATION OF RAIL
Scale: 3/8" = 1"

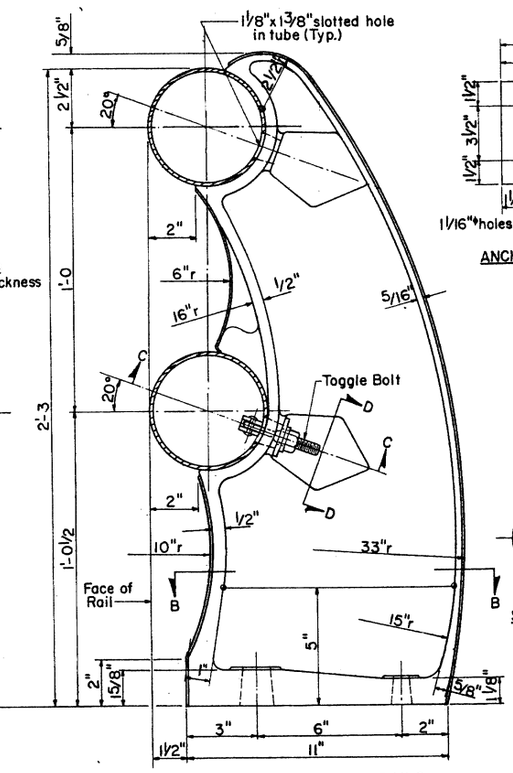


SECTION A-A THRU RAILS
Scale: 3/8" = 1"

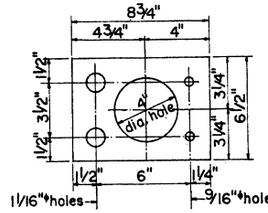


ANCHOR PLATE DETAILS
Scale: 1/4" = 1"

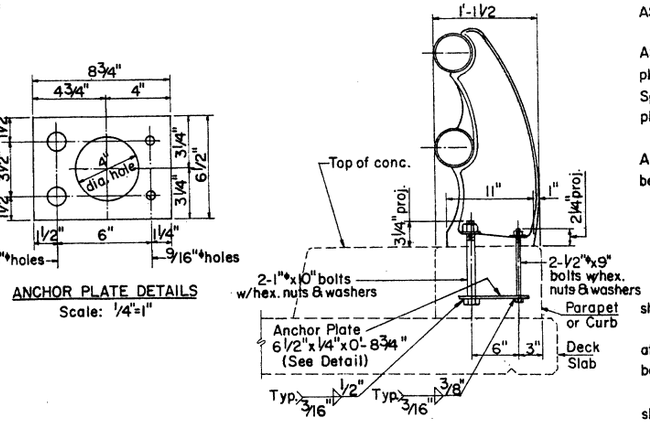


RAIL POST ANCHOR BOLT ASSEMBLY
Scale: 1½" = 1'-0

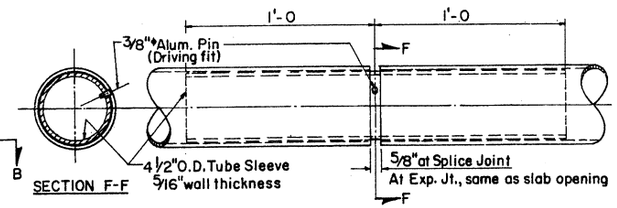


SECTION F-F

EXPANSION & SPLICE JOINT
Scale: 3" = 1'-0

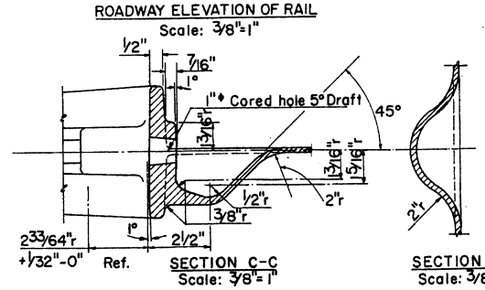


SECTION C-C
Scale: 3/8" = 1"




SECTION D-D
Scale: 3/8" = 1"

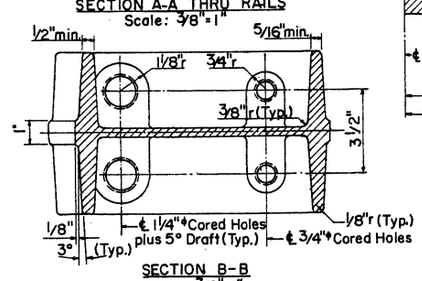


SECTION B-B
Scale: 3/8" = 1"

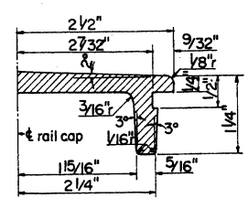


SECTION E-E
Full Scale

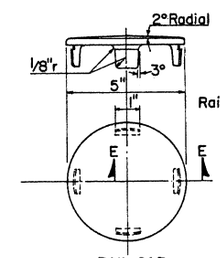


RAIL CAP
Scale: 3/8" = 1"

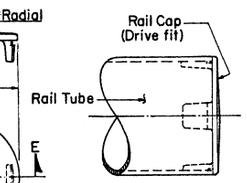


RAIL CAP CONNECTION
Scale: 3/8" = 1"

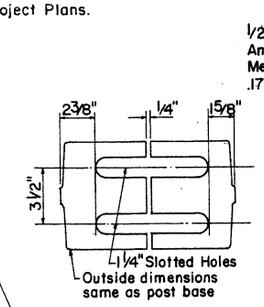


SHIM DETAIL
Scale: 3" = 1'-0

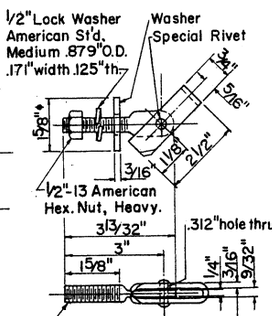


TOGGLE BOLT ASSEMBLY
Scale: ½" = 1"

## MATERIALS

At the option of the contractor, tubing and rail posts shall be either galvanized steel or aluminum. Castings shall have a maximum draft of 3° and a minimum radius of fillet of 1/4" unless otherwise shown. All post dimensions are minimum. Material for metal handrail shall be as follows:

Aluminum Tubing: Alloy 6061-T6, ASTM Specification B221.

Steel Tubing: ASTM A36 or ASTM A53, Grade A or B; galvanized after fabrication in accordance with ASTM A123.

Cast Aluminum Posts: AASHO M193 (Alloy A 444-T4).

Cast Steel Posts: AASHO M192, Class 70; galvanized in accordance with ASTM A123.

Toggle Bolt Assembly: Toggle Bolt-1335 C.R. steel heat treated RC 32-38, ASTM A354; Toggle-1015 H.R. steel, ASTM A303; Washer-SAE 1020 H.R. steel plate, ASTM A7; Nut-1035 C.R. steel heat treated, ASTM A325, Grade 2H; Special Rivet-1038 C.R. steel heat treated, ASTM A195. All parts shall be cadmium plated type NS .0005" thick, ASTM A165.

Anchor Bolt Assembly: Anchor Bolts, Nuts, and Washers shall be ASTM A325. Anchor Plates shall be ASTM A36. Exposed portion of the assembly to be galvanized in accordance with ASTM A153.

## GENERAL NOTES

Design: AASHO 1973. Specifications for Highway Bridges.

All posts shall be normal to parapet or curb.

All open ends of rail members shall be capped.

For horizontal curves of radius less than 2,000 ft., the rail member shall be fabricated to follow the curvature of the roadway.

Panel lengths of rail shall be attached to a minimum of four posts, (except at Abutment Dados). Rail tube sections shall be spliced in the same panel, joints being spliced as detailed.

Rail posts shall be seated on at least one shim having dimensions as shown. Additional shims or half-shims may be used in shimming for alignment. These shims shall be 1/16" in thickness and made of tightly twisted asbestos yarn spun with brass wire, woven into Asbestos-Metallic cloth and impregnated with a rubber heat-resisting compound.

For spacing of rail posts, concrete dimensions, and reinforcing steel, see Project Plans.

| | | | | | | | |
|---|---|---|---|---|---|---|---|
| DESIGN | AGS, RCB | 10-64 | NO. | DESCRIPTION OF REVISIONS | MADE BY | DATE | |
| DRAWN | RWB | 12-64 | 1 | | | | |
| CHECKED | AGS | 12-64 | 2 | | | | |
| | | | 3 | | | | |

DESIGN APPROVED: K.C. Brechler
APPROVED FOR DISTRIBUTION: E. Abendroth

ARIZONA
DEPARTMENT OF TRANSPORTATION
HIGHWAYS DIVISION
STANDARD PLANS

DOUBLE-RAIL HANDRAIL

REVISION

STANDARD NO. H-2-1
PLAN NO. B-22.20

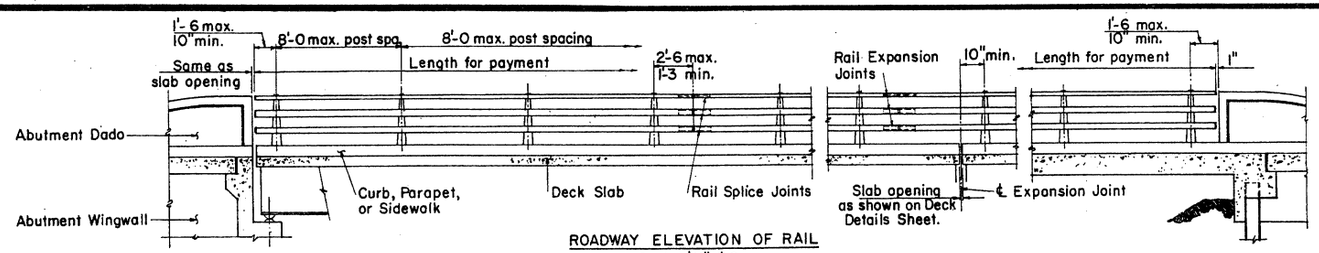


ROADWAY ELEVATION OF RAIL
Scale: 1/4"=1'-0

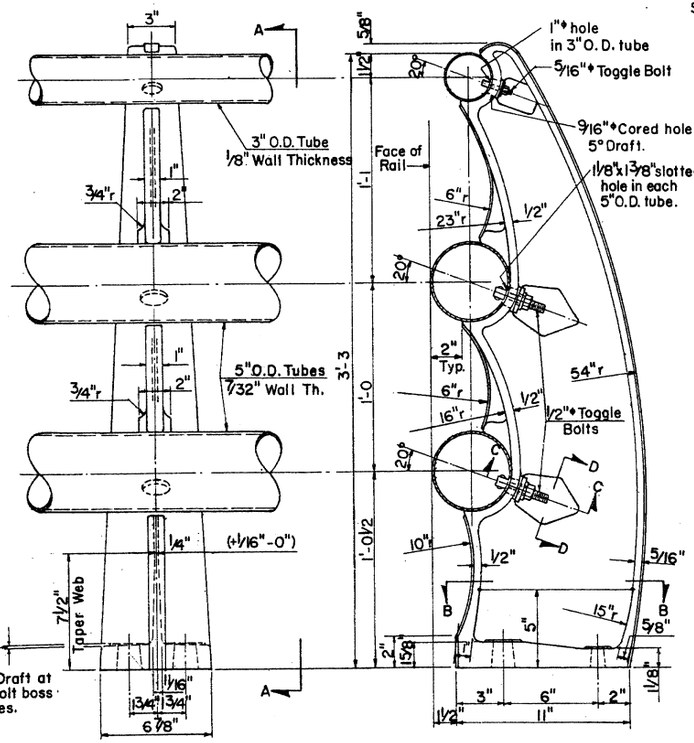


ROADWAY ELEVATION OF RAIL
Scale: 1/4"=1'-0

SECTION A-A THRU RAILS
Scale: 1/4"=1'-0

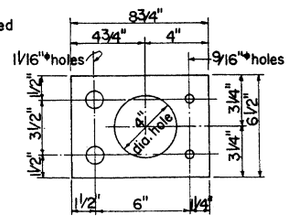


ANCHOR PLATE DETAILS
Scale: 1/4"=1"

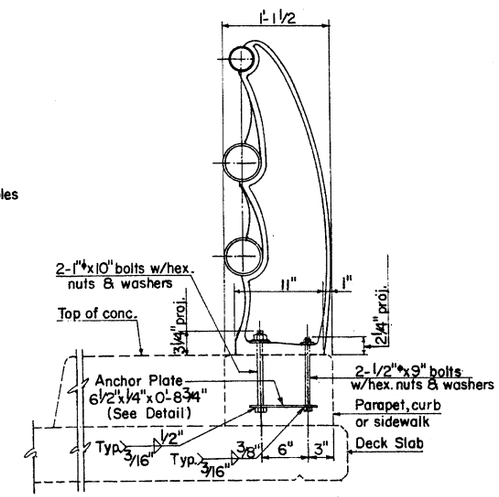


RAIL POST ANCHOR BOLT ASSEMBLY
Scale: 1 1/2"=1'-0

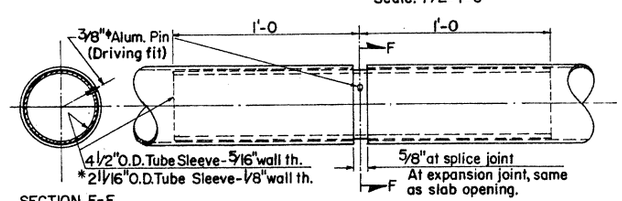


SECTION F-F

EXPANSION & SPLICE JOINT
Scale: 3"=1'-0

## MATERIALS

At the option of the contractor, tubing and rail posts shall be either galvanized steel or aluminum. Castings shall have a maximum draft of 3° and a minimum radius of fillet of 1/4" unless otherwise shown. All post dimensions are minimum. Material for metal handrail shall be as follows:

Aluminum Tubing: Alloy 6061-T6, ASTM Specification B221.

Steel Tubing: ASTM A36 or ASTM A53, Grade A or B; galvanized after fabrication in accordance with ASTM A123.

Cast Aluminum Posts: AASHO M193 (Alloy A444-T4).

Cast Steel Posts: AASHO M192, Class 70; galvanized in accordance with ASTM A123.

Toggle Bolt Assemblies: All material for the 5/16"♦ toggle bolt shall conform to SAE 1020. Material for the 1/2"♦ toggle bolt shall be as follows: Toggle Bolt - 1335 C.R. steel heat treated RC 32-38, ASTM A354; Toggle - 1015 H.R. steel, ASTM A303; Washer - SAE 1020 H.R. steel plate, ASTM A7; Nut - 1035 C.R. steel heat treated, ASTM A325, Grade 2H; Special Rivet - 1038 C.R. steel heat treated, ASTM A195. All parts shall be cadmium plated type NS .0005" thick, ASTM A165.

Anchor Bolt Assembly: Anchor Bolts, Nuts, and Washers shall be ASTM A325. Anchor Plates shall be ASTM A36. Exposed portion of the assembly to be galvanized in accordance with ASTM A153.

## GENERAL NOTES

Design: AASHO 1973. Specifications for Highway Bridges.

All posts shall be normal to parapet, curb, or sidewalk.

All open ends of rail members shall be capped.

For horizontal curves of radius less than 2,000 ft., the rail member shall be fabricated to follow the curvature of the roadway.

Panel lengths of rail shall be attached to a minimum of four posts, (except at Abutment Dados). Rail tube sections shall be spliced in the same panel, joints being spliced as detailed.

Rail posts shall be seated on at least one shim having dimensions as shown. Additional shims or half-shims may be used in shimming for alignment. These shims shall be 1/16" in thickness and made of tightly twisted asbestos yarn spun with brass wire, woven into Asbestos-Metallic cloth and impregnated with a rubber heat-resisting compound.

For spacing of rail posts, concrete dimensions, and reinforcing steel, see Project Plans.

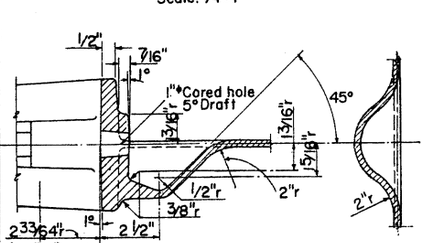


SECTION C-C
Scale: 3/8"=1"

SECTION D-D
Scale: 3/8"=1"

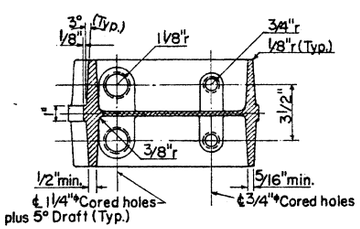


SECTION B-B
Scale: 1/4"=1"

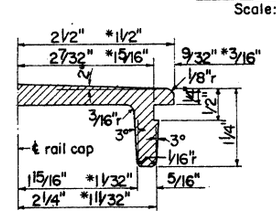


SECTION E-E
Full Scale

* Denotation thus applies to top rail member only.

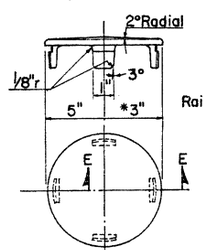


RAIL CAP
Scale: 3/8"=1"

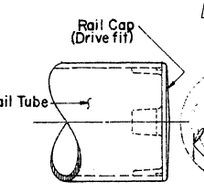


RAIL CAP CONNECTION
Scale: 3/8"=1"

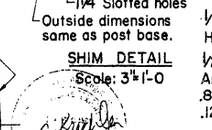


SHIM DETAIL
Scale: 3"=1'-0

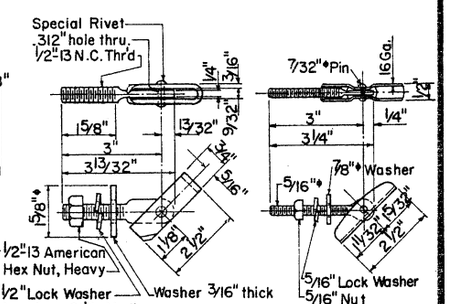


TOGGLE BOLT ASSEMBLIES
Scale 1/2"=1"

| | | | | | | | | | | | |
|---|---|---|---|---|---|---|---|---|---|---|---|
| DESIGN | AGS, RCB | 10-64 | NO. | DESCRIPTION OF REVISIONS | MADE BY | DATE |
| DRAWN | RWB | 12-64 | 1 | Rev. only specs from ASTM A123 to A153. | | |
| CHECKED | AGS | 12-64 | 2 | Rev. Rail Anchor Bolt Assembly. | | |
| | | | 3 | Rev. 2" proj. to 2 1/4" for 2" anchor bolts. | | |
| | | | 4 | 4-1-66 Added "Post" to note "All dimension are min. Added Alum. Post Spec. AASHO M193-241. Alum. Tubing Alloy 6061-T6 deleted. | | |

DESIGN APPROVED R.C. Buchler

APPROVED FOR DISTRIBUTION E. P. Chandler

ARIZONA
DEPARTMENT OF TRANSPORTATION
HIGHWAYS DIVISION
STANDARD PLANS

TRIPLE-RAIL HANDRAIL

REVISION

STANDARD NO. H-3-1

PLAN NO. B-22.30

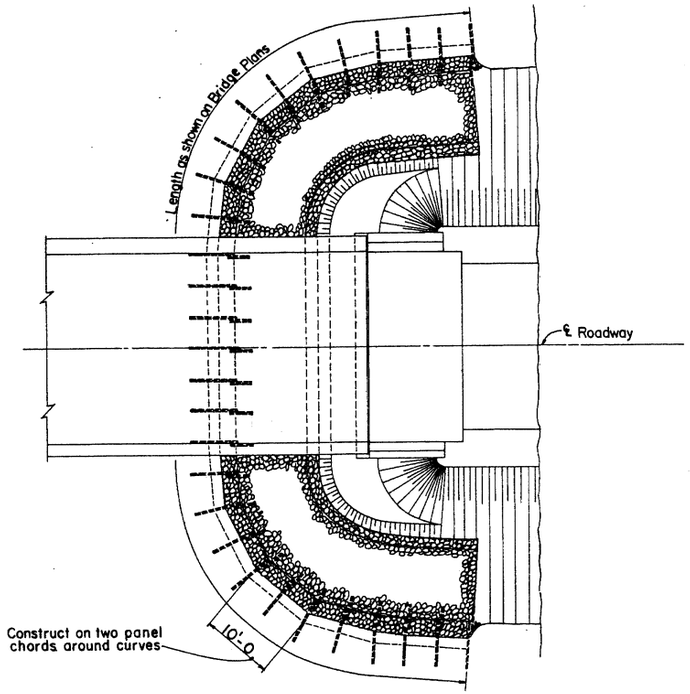


PLAN OF BANK PROTECTION AT ABUTMENT
Scale: 1" = 10'

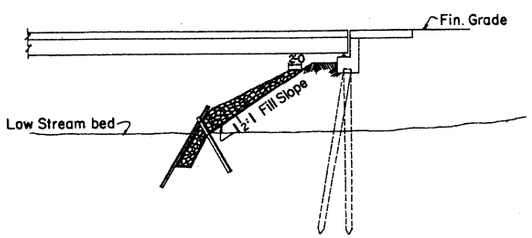


SECTION ON ℄ ROADWAY




RAIL CONNECTION DETAIL
Scale: 1½" = 1'-0
Burn holes through rails in field and bolt together as shown

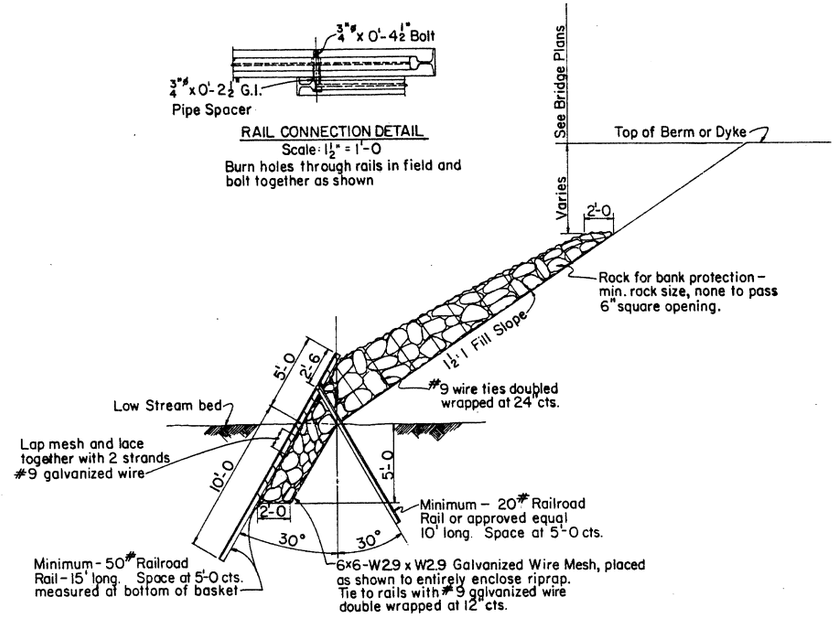


DETAIL – A
Scale: ¼" = 1'-0

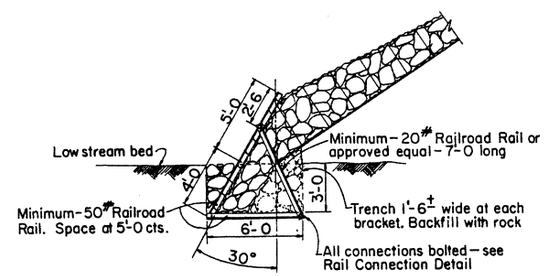


DETAIL – B
Scale ¼" = 1'-0
Use this Detail ONLY when called for on Bridge Plans

NOTE:
See Detail – A for dimensions and other details not shown

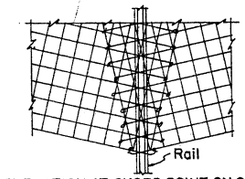


ELEVATION AT CHORD POINT ON CURVE
Scale: ½" = 1'-0

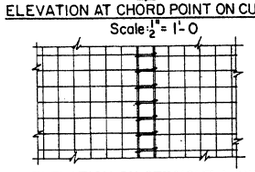

ELEVATION ON STRAIGHT A-WAY
Scale: ½" = 1'-0

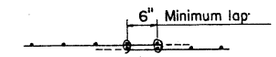


SECTION
Scale: 1" = 1'-0

WIRE MESH SPLICE DETAILS

GENERAL NOTES

Construction – St'd. Spec's. Arizona Highway Department Edition of 1969, revised to date.

Rails may be either new or used. If used rails are furnished they shall be free from rust and equal to 95% of original section.

All wire mesh, bolts, pipe spacers and tie wire shall be galvanized.

| DESIGN | | NO. | DESCRIPTION OF REVISIONS | MADE BY | DATE |
|---|---|---|---|---|---|
| DRAWN | KST 2-73 | 1 | Removed 2:1 Rock Slope note | JTW | 7-76 |
| CHECKED | JRM 3-73 | 2 | | | |
| | | 3 | | | |

| DESIGN APPROVED | ARIZONA DEPARTMENT OF TRANSPORTATION HIGHWAYS DIVISION STANDARD PLANS | REVISION |
|---|---|---|
| R.C. Brechler | | |
| APPROVED FOR DISTRIBUTION | RAIL BANK PROTECTION FOR BRIDGES | STANDARD NO. RB-2 |
| E.F. Sandlin | | PLAN NO. B-23.10 |

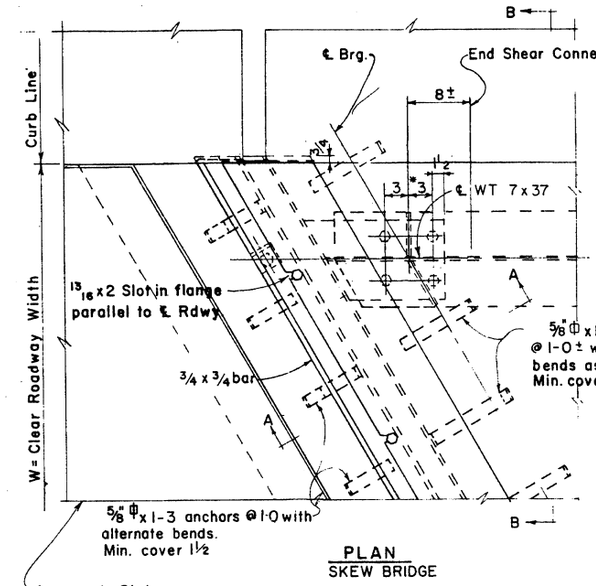


PLAN
SKEW BRIDGE

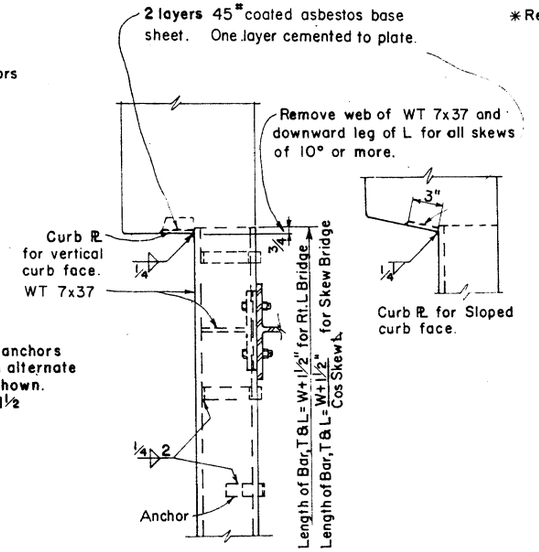


SECTION B-B

* Revise to clear bearing stiffeners if necessary.

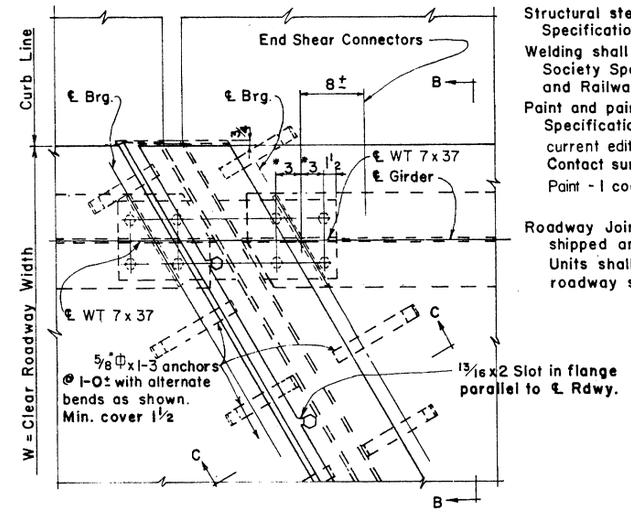


PLAN
SKEW BRIDGE

## GENERAL NOTES :

Structural steel shall conform to A.S.T.M. Specification A-36.

Welding shall conform to American Welding Society Specifications for Welded Highway and Railway Bridges.

Paint and painting shall conform to Standard Specifications of Arizona Highway Dept.- current edition.
Contact surfaces shall not be painted.
Paint - 1 coat each 1A or 1B, 3 and 10

Roadway Joint shall be shop assembled, shipped and erected as a unit.
Units shall be contoured to conform to the roadway section.

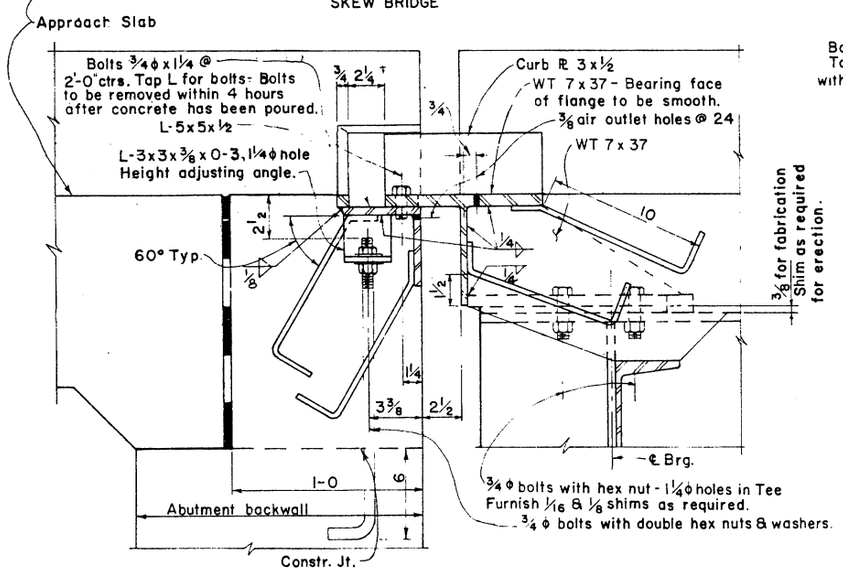


SECTION A-A
AT ABUTMENTS

‡ 2¼" max. at 70° F.

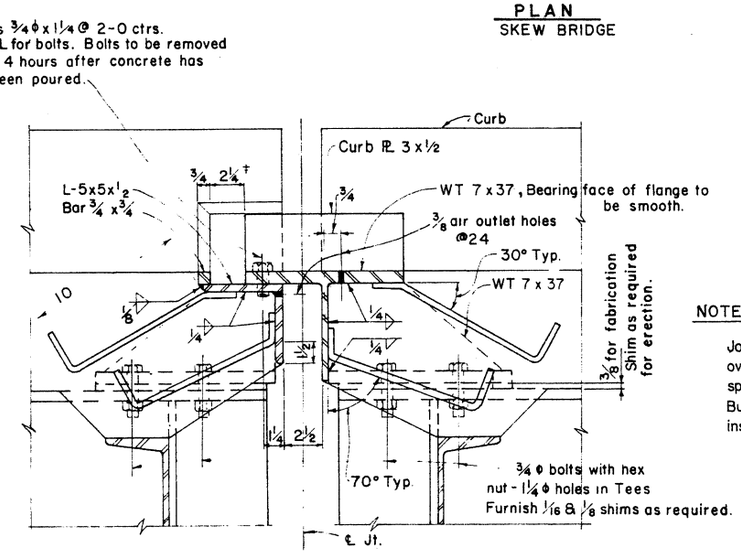


SECTION C-C
AT PIERS & HINGED SPANS

NOTE:

Joint shall be continuous for lengths 40 feet or less. For lengths over 40 feet the joint may be two pieces butted together, without splicing, at the roadway crown or construction centerline.
Butted ends shall meet smoothly on the roadway surface after installation or they shall be ground smooth.

| DESIGN | RJR | 8-62 | NO. | DESCRIPTION OF REVISIONS | MADE BY | DATE |
|---|---|---|---|---|---|---|
| DRAWN | CW | 8-62 | 1 | Joint note added | SEA | 11-74 |
| CHECKED | RJR | 10-62 | 2 | | | |
| | | | 3 | | | |

| DESIGN APPROVED | ARIZONA DEPARTMENT OF TRANSPORTATION HIGHWAYS DIVISION STANDARD PLANS | REVISION |
|---|---|---|
| R.C. Brechler | | |
| APPROVED FOR DISTRIBUTION | ROADWAY JOINT-STEEL | STANDARD NO. RJ-3 |
| | | PLAN NO. B-24.10 |

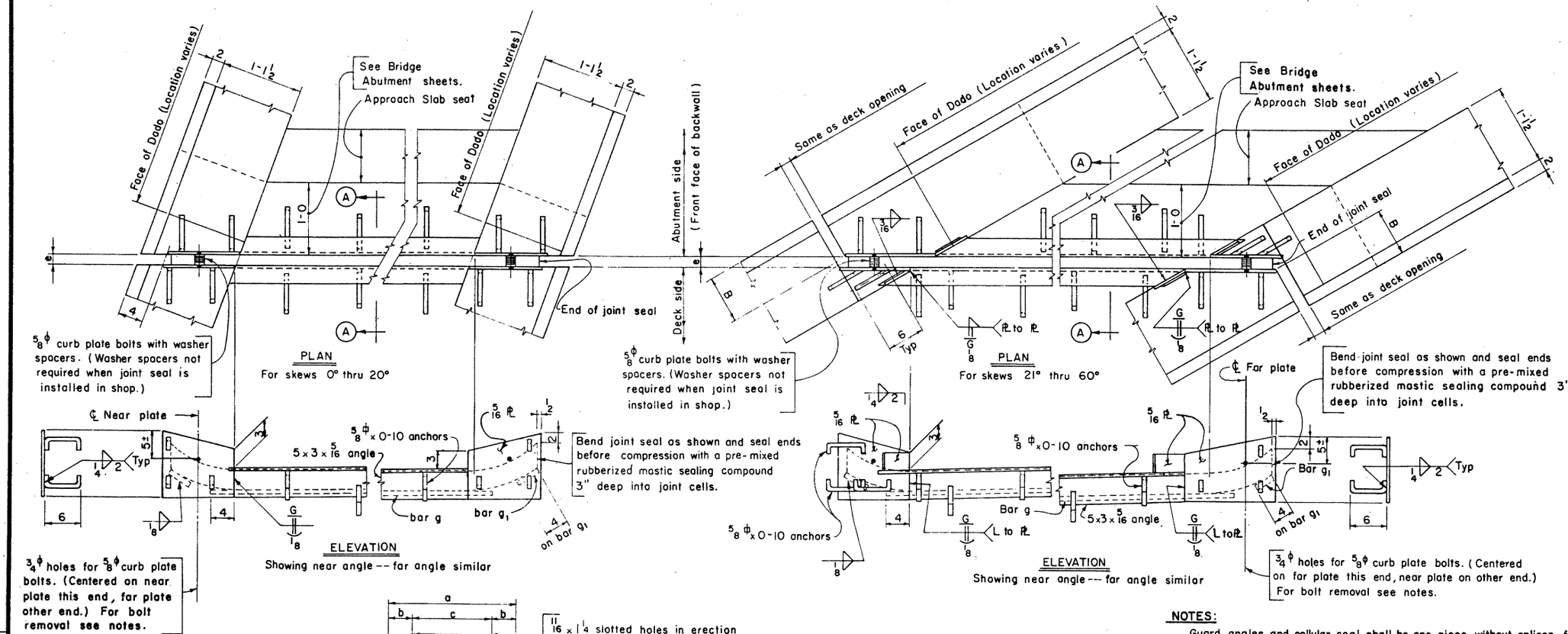


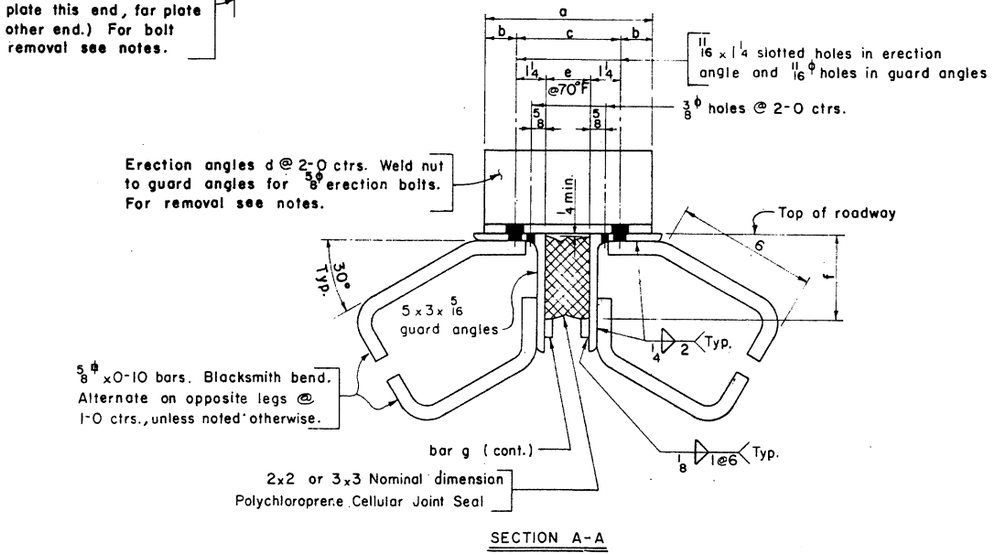


| Skew Angle | Dimension B |
|---|---|
| 21° thru 33° | 4 |
| 34° thru 36° | 4 1/2 |
| 37° thru 40° | 5 |
| 41° thru 43° | 5 1/2 |
| 44° thru 47° | 6 |
| 48° thru 51° | 6 1/2 |
| 52° thru 54° | 7 |
| 55° thru 57° | 7 1/2 |
| 58° thru 60° | 8 |

| | 2 x 2 Nominal Dim. Polychloroprene Cellular Joint Seal | 3 x 3 Nominal Dim. Polychloroprene Cellular Joint Seal |
|---|---|---|
| a | 6 1/2 | 7 |
| b | 1 3/8 | 1 5/16 |
| c | 3 3/4 | 4 3/8 |
| d | 2x2 x 1/4 x 0-6 1/2 angles | 3x3x3/8 x 0-7 angles |
| e | 1 1/4 @ 70°F | 1 7/8 @ 70°F |
| f | 2 1/2 | 3 5/8 |
| g or g1 | 1/4 x 3/4 bar | 3/8 x 3/4 bar |

## NOTES:

Guard angles and cellular seal shall be one piece, without splices, for lengths 60 feet or less. For over 60 feet guard angles and cellular seal may be two pieces butted together, without splicing, at the crown or another location away from drainage.

Paint --1 coat each #1A or #1B, #3 and #10 on surfaces of 5 x 3 x 5/16 guard angles, bar g, bar g1 and 5/16 plates not in contact with joint seal or concrete.

1 coat #1A or #1B on joint seal face of guard angles, bar g, bar g1 and 5/16 plates.

Joint opening e shall be adjusted in the field for any variation of temperature above or below 70°F., for temperature correction refer to Bridge sheets.

Material -- Structural Steel - A.S.T.M. - A36.

Erection angles and curb plate bolts shall not be removed until joint is fully encased in concrete (except curbs) and such concrete has attained its initial set.

Holes for curb plate bolts shall be plugged before placing curb concrete.

| DESIGN | JRM | 11-70 | NO. | DESCRIPTION OF REVISIONS | MADE BY | DATE |
|---|---|---|---|---|---|---|
| DRAWN | WHD | 8-71 | 1 | Joint note added | SEA | 11-74 |
| CHECKED | RR | 8-71 | 2 | | | |
| | | | 3 | | | |

DESIGN APPROVED: R.C. Brechler

APPROVED FOR DISTRIBUTION: E. Sandlin

ARIZONA
DEPARTMENT OF TRANSPORTATION
HIGHWAYS DIVISION
STANDARD PLANS

ROADWAY JOINT
POLYCHLOROPRENE

REVISION

STANDARD NO. RJ-4

PLAN NO. B-24.20