JS LEACH

ARIZONA
DEPARTMENT OF TRANSPORTATION

HIGHWAYS DIVISION
STRUCTURES SECTION
STANDARD DRAWINGS
1988

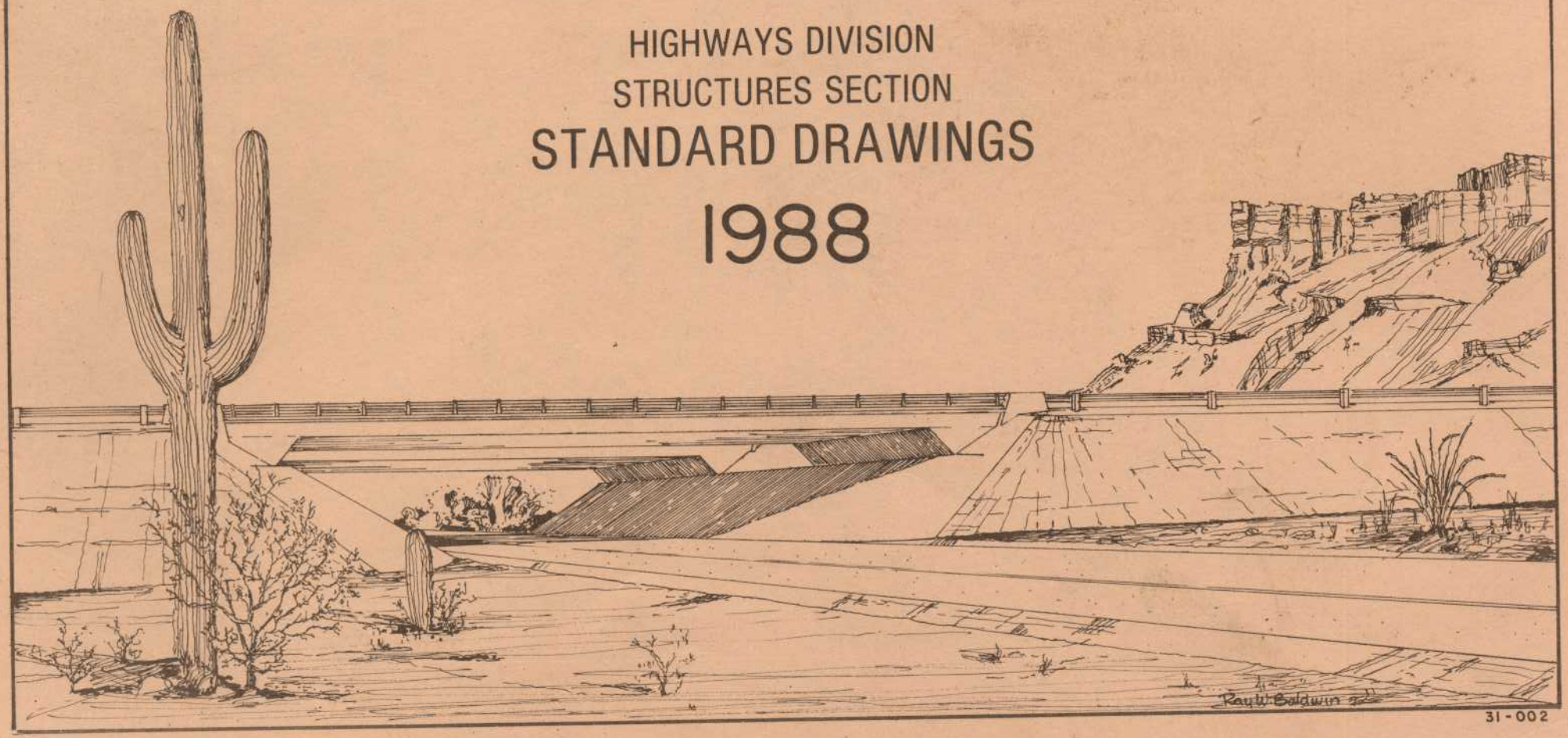

31-002

DESIGN	DHY	8-72	NO	DESCRIPTION OF REVISIONS	MADE BY	DATE	NO.	DESCRIPTION OF REVISIONS	MADE BY	DATE
DRAWN	FDL	9-72	1	Edge Beam Added with Note.	SEA	10-74	4	General Notes	JEM	10-86
CHECKED	NAB	3-73	2	Added Notes & Changed Details	JTW	7-76	5	Addition to Sect. A-A	JEM	3-88
			3	General Notes	CH	7-82	6			

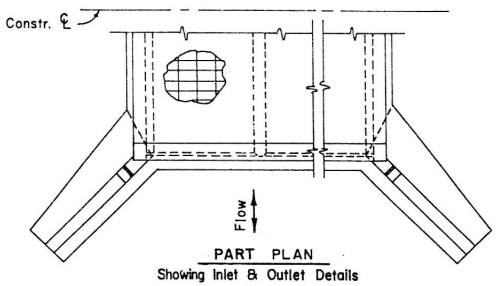

PART PLAN
Showing Inlet & Outlet Details

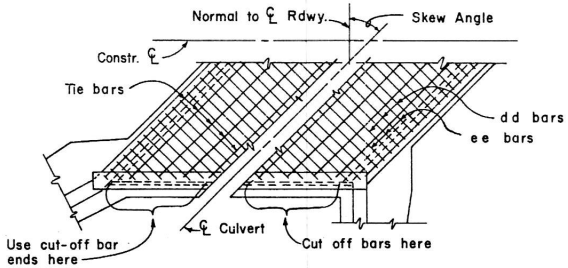

PART PLAN-SKEWED CULVERT
Showing Reinf. Steel Placement

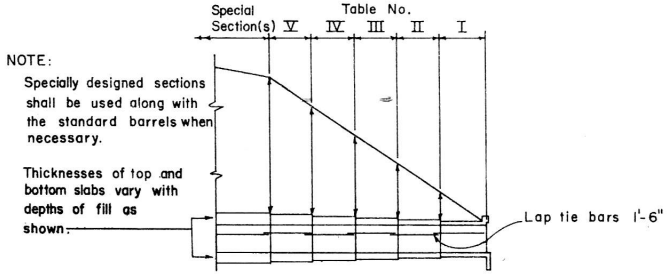

NOTE:
Specially designed sections shall be used along with the standard barrels when necessary.

Thicknesses of top and bottom slabs vary with depths of fill as shown.

DIAGRAM SHOWING TABLES TO BE USED FOR VARIOUS FILL HEIGHTS

NOTE: Culvert barrels always begin and end with Table No. I.

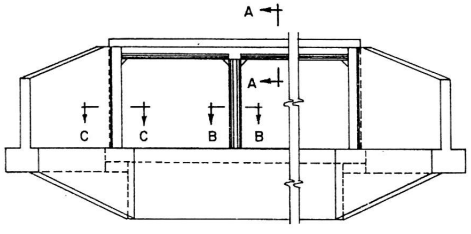

TYPICAL ELEVATION

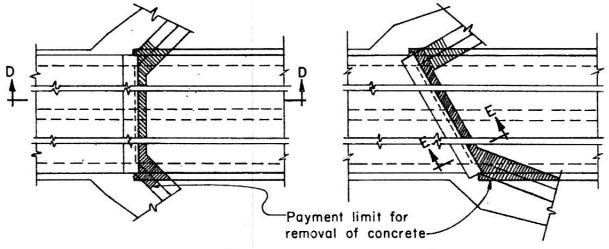

RIGHT ANGLE CULVERT

SKEWED CULVERT

PLAN

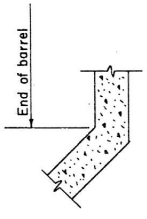

SECTION C-C

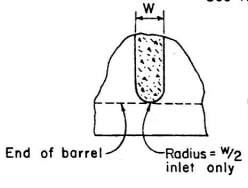

SECTION B-B

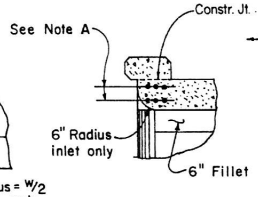

SECTION A-A

TYPICAL DETAILS

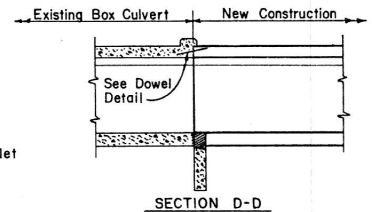

SECTION D-D

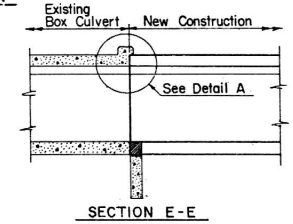

SECTION E-E

EXTENSION OF CULVERTS

QUANTITY NOTE:
Total Box Culvert Quantities include Barrel Quantities and Headwall Quantities. Add Apron Quantity when apron is used.
Standard headwall quantities include wings, curb and cut-off wall.
Barrel Quantities are obtained by multiplying length of box by quantities per linear foot of box.

GENERAL NOTES:
Construction-Arizona Department of Transportation Standard Specification for Road and Bridge Construction.
Design-AASHTO Standard Specifications for Highway Bridges, 1983 Edition, and 1984 and 1985 Supplements.
Loading Class-HS 20-44 and Interstate Alternate Loading.
All Concrete shall be Class 'S', f'c = 3000 psi.
Reinforcing Steel shall conform to ASTM Specification A615. Bar size #6 and smaller shall be designed as Grade 40 and furnished as Grade 40 or Grade 60, fs = 20,000 psi. Bar sizes #7 and larger shall be Grade 60, fs = 24,000 psi.
All bend dimensions for reinforcing steel shall be out to out of bars. All placement dimensions for reinforcing steel shall be to center of bars except as noted.
All reinforcing steel shall have 2" clear cover unless noted otherwise.

JOINT NOTE:
All structures shall have formed Constr. joints in top slab and walls (optional in floor slab) spaced not more than 38'-6" apart or as shown. Reinforcing steel shall project 1'-6" thru the joint. The joint shall be made with 1/4" plywood bulkhead which shall be left in place.

CONSTRUCTION NOTE:
Remove existing headwall as required for new construction.
If concrete headwall is removed to face of curb, no dowels are needed.
Use projecting reinforcing steel for bond in new concrete.
Curb to remain unless within 1'-0" of finish grade.
Wingwalls to be removed a Min. of 1'-6" to provide steel for bond.

NOTE A:
For culverts skewed over 5° to 30° use 3 #7 bars* top and bottom of slab.
For culverts skewed over 30° to 45°, use 3 #8 bars* top and bottom of slab.
For culverts skewed over 45°, requires a special edge beam design.
*Reinforcing bar quantities have to be calculated.

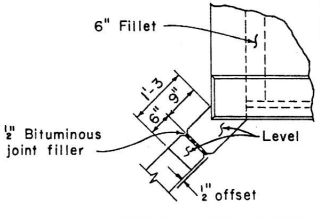

WINGWALL JOINT DETAIL
For all barrels 8 ft. and over (H ≥ 8')

NOTE:
Footing shall be continuous with no joint.

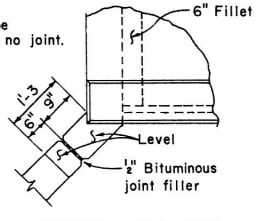

WINGWALL JOINT DETAIL
For all barrels under 8 ft. (H < 8')

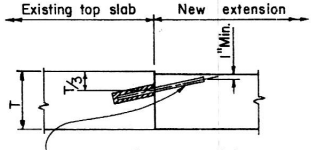

Drill hole 8" deep with 1" ϕ hole for #6 x 1'-9 dowel @ 18". Epoxy dowel in hole with approved adhesive. Top slab only. Anchorage shall develop a tensile pullout strength of 13 kips.

DOWEL NOTE

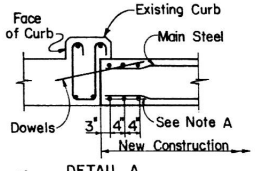

DETAIL A
EDGE BEAM

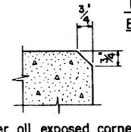

Chamfer all exposed corners thus unless otherwise noted.
This note applicable to all culvert sheets pertaining to the project.

DESIGN APPROVED	ARIZONA DEPARTMENT OF TRANSPORTATION HIGHWAYS DIVISION STANDARD DRAWINGS	REVISION
R.C. Bradler		7-88
APPROVED FOR DISTRIBUTION E.T. Donaldson	MISCELLANEOUS DETAILS FOR STANDARD BOX CULVERTS	STANDARD NO. B-01.10

TABLE OF CONTENTS - STRUCTURES SECTION

REINFORCED CONCRETE BOX CULVERTS

B-01.10 Miscellaneous Details for Standard Box Culverts
B-02.10 Single Barrel Box Culvert
B-02.20 Double Barrel Box Culvert
B-02.25 Double Barrel Box Culvert
B-02.30 Triple Barrel Box Culvert
B-02.35 Triple Barrel Box Culvert
B-02.40 Four Barrel Box Culvert
B-02.45 Four Barrel Box Culvert
B-02.50 Five Barrel Box Culvert
B-02.55 Five Barrel Box Culvert
B-02.60 Six Barrel Box Culvert
B-02.65 Six Barrel Box Culvert
B-02.70 Culvert Quantities
B-03.10 16' x 14' Equipment Pass
B-04.10 Outlet Wings, Culvert Height 3' to 7', Skew 0° to 20°
B-04.20 Outlet Wings, Culvert Height 8' to 12', Skew 0° to 20°
B-04.30 Inlet Wings, Culvert Height 3' to 7', Skew 0° to 20°
B-04.40 Inlet Wings, Culvert Height 8' to 12', Skew 0° to 20°
B-04.50 Outlet Wings, Culvert Height 3' to 7', Skew 25° to 45°
B-04.60 Outlet Wings, Culvert Height 8' to 12', Skew 25° to 45°
B-04.70 Inlet Wings, Culvert Height 3' to 7', Skew 25° to 45°
B-04.80 Inlet Wings, Culvert Height 8' to 12', Skew 25° to 45°
B-05.10 Headwall Quantities, 2:1 Slope
B-05.20 Headwall Quantities, 4:1 Slope
B-05.30 Headwall Quantities, 6:1 Slope
B-06.10 Outlet Apron Details
B-06.20 Outlet Apron Dimensions & Quantities, 2:1 Slope
B-06.30 Outlet Apron Dimensions & Quantities, 4:1 Slope
B-06.40 Outlet Apron Dimensions & Quantities, 6:1 Slope
B-08.10 Inlet or Outlet Level Wings, Height 3' to 7'
B-08.20 Inlet or Outlet Level Wings, Height 8' to 12'

CONTINUOUS SPAN CONCRETE SLAB BRIDGES

B-09.10 Continuous Span Slab, HS20-44 Loading
B-09.20 Continuous Span Slab With Hinge, HS20-44 Loading
B-09.30 Continuous Span Slab, Interstate Loading
B-09.40 Continuous Span Slab With Hinge, Interstate Loading
B-10.10 Slab Hinge Joint and Hinge Span Reinforcing Details
B-10.11 Slab Hinge Joint and Hinge Span Reinforcing Details (Stud Alternate)

REINFORCED CONCRETE HEADWALLS FOR PIPE CULVERTS

B-11.10 Pipe Culvert Headwalls, Miscellaneous Details
B-12.10 Inlet Headwall, Right Angle Pipe Culvert
B-12.20 Outlet Headwall, Right Angle Pipe Culvert
B-12.30 Inlet and Outlet Headwalls, Right Angle Pipe Culvert, 2:1 Slope
B-12.40 Inlet and Outlet Headwalls, Right Angle Pipe Culvert, 4:1 Slope
B-12.50 Inlet and Outlet Headwalls, Right Angle Pipe Culvert, 6:1 Slope
B-13.10 Inlet and Outlet Headwalls, 15° Skew Pipe Culvert
B-13.20 Inlet and Outlet Headwalls, 15° Skew Pipe Culvert, 2:1 Slope
B-13.30 Inlet and Outlet Headwalls, 15° Skew Pipe Culvert, 4:1 Slope
B-13.40 Inlet and Outlet Headwalls, 15° Skew Pipe Culvert, 6:1 Slope
B-14.10 Inlet and Outlet Headwalls, 30° Skew Pipe Culvert
B-14.20 Inlet and Outlet Headwalls, 30° Skew Pipe Culvert, 2:1 Slope
B-14.30 Inlet and Outlet Headwalls, 30° Skew Pipe Culvert, 4:1 Slope
B-14.40 Inlet and Outlet Headwalls, 30° Skew Pipe Culvert, 6:1 Slope
B-15.10 Inlet and Outlet Headwalls, 45° Skew Pipe Culvert
B-15.20 Inlet and Outlet Headwalls, 45° Skew Pipe Culvert, 2:1 Slope
B-15.30 Inlet and Outlet Headwalls, 45° Skew Pipe Culvert, 4:1 Slope
B-15.40 Inlet and Outlet Headwalls, 45° Skew Pipe Culvert, 6:1 Slope
B-16.10 Multipipe Headwalls
B-17.10 Outlet Aprons
B-17.20 Outlet Apron Steel List 2:1 Slope
B-17.30 Outlet Apron Steel List 4:1 Slope
B-17.40 Outlet Apron Steel List 6:1 Slope

RETAINING WALLS

B-18.10 Cantilever Retaining Wall Details
B-18.20 Cantilever Retaining Walls on Spread Footings
B-18.30 Cantilever Retaining Walls on Steel Piles
B-18.40 Cantilever Retaining Walls on Concrete Piles
B-18.50 Masonry Retaining Walls

MISCELLANEOUS STANDARDS

B-19.10 Miscellaneous Details for Bridges
B-19.11 Approach Slab Details
B-19.12 Anchor Slab Details
B-19.20 Slope Paving Details
B-19.30 Structural Excavation - Payment Limits
B-19.40 Structure Backfill - Payment Limits
B-20.10 Precast and Cast-In-Place Concrete Piles
B-20.20 Prestressed Concrete Piles
B-21.18 Bridge Concrete Barrier Details
B-21.19 Bridge Concrete Barrier Transition with Curb
B-21.20 Bridge Concrete Barrier Transition
B-21.21 Block and Terminal Connector Assembly Details
B-22.40 Traffic and Pedestrian Rail
B-22.41 Traffic and Pedestrian Rail
B-22.50 Pedestrian Fence Details With Curb
B-22.60 Pedestrian Fence Details With Parapet
B-23.10 Rail Bank Protection for Bridges
B-24.20 Compression Seal Joint
B-30.10 Concrete Sound Barrier Walls
B-30.20 Masonry Sound Barrier Walls

DESIGN				NO.	DESCRIPTION OF REVISIONS	MADE BY	DATE
DRAWN				1	Total Redesign of Box	C.H.	6-88
CHECKED				2			
				3			
				4			

TABLE NO. I
0'-10' FILL

Span "S"	Height "H"	Slab "T"	Walls "W"	aa Spacing	aa Length	cc Number ✦	ee Bar Size	ee Spacing	ee Length	gg Number ✦	hh Bar Size	hh Spacing	hh Length	F
6'	3'	9½"	9"	12"	4'-2	20	5	6"	7'-2	14	4	9"	5'-2	2'-6
	4'	9½"	9"	12"	5'-2	24	5	6"	7'-2	16	4	8"	5'-11	2'-9
	5'	9½"	9"	12"	6'-2	24	5	6"	7'-2	16	4	6"	6'-5	2'-9
	6'	9½"	9"	12"	7'-2	28	6	8"	7'-2	18	4	6"	7'-2	3'-0
	7'	9½"	9"	12"	8'-2	32	6	8"	7'-2	18	4	6"	7'-8	3'-0
8'	3'	10"	11"	12"	4'-3	20	6	9"	9'-6	18	4	6"	6'-2	3'-5
	4'	10"	11"	12"	5'-3	24	6	8"	9'-6	20	4	6"	6'-8	3'-5
	5'	10"	11"	12"	6'-3	24	6	8"	9'-6	20	4	6"	7'-1	3'-4
	6'	10"	11"	12"	7'-3	28	6	8"	9'-6	20	4	6"	7'-7	3'-4
	7'	10"	11"	12"	8'-3	32	6	6"	9'-6	22	4	6"	8'-0	3'-3
	8'	10"	11"	12"	9'-3	32	6	6"	9'-6	22	4	6"	8'-5	3'-2
10'	3'	10"	13"	12"	4'-3	20	6	8"	11'-10	22	5	6"	7'-4	4'-5
	4'	10"	13"	12"	5'-3	24	6	8"	11'-10	22	5	6"	7'-10	4'-5
	5'	10"	13"	12"	6'-3	24	6	7"	11'-10	24	5	7"	8'-3	4'-4
	6'	10"	13"	12"	7'-3	28	6	7"	11'-10	24	5	7"	8'-9	4'-4
	7'	10"	13"	12"	8'-3	32	6	7"	11'-10	26	5	7"	9'-2	4'-3
	8'	10"	13"	12"	9'-3	32	6	7"	11'-10	26	5	7"	9'-8	4'-3
	9'	10"	13"	12"	10'-3	36	6	6"	11'-10	28	5	8"	10'-1	4'-2
	10'	10½"	13"	12"	11'-4	40	6	6"	11'-10	28	5	8"	10'-7	4'-2
12'	8'	11½"	15"	9"	9'-6	32	7	6"	14'-2	38	6	6"	10'-4	4'-8
	9'	11½"	15"	8"	10'-6	36	8	8"	14'-2	38	6	6"	10'-10	4'-8
	10'	11½"	15"	6"	11'-6	40	7	6"	14'-2	40	6	6"	11'-4	4'-8
	11'	12"	15"	8"	12'-7	40	8	8"	14'-2	42	6	6"	11'-6	4'-4
	12'	12"	15"	6"	13'-7	44	8	6"	14'-2	46	6	6"	12'-2	4'-6

TABLE NO. II
10'-15' FILL

Span "S"	Height "H"	Slab "T"	Walls "W"	aa Spacing	aa Length	cc Number ✦	ee Bar Size	ee Spacing	ee Length	gg Number ✦	hh Bar Size	hh Spacing	hh Length	F
6'	3'	8"	9"	12"	3'-11	20	5	8"	7'-2	14	4	6"	5'-1	2'-6
	4'	8"	9"	12"	4'-11	24	5	8"	7'-2	14	4	6"	5'-7	2'-6
	5'	8"	9"	12"	5'-11	24	5	6"	7'-2	14	4	6"	6'-1	2'-6
	6'	8"	9"	12"	6'-11	28	6	9"	7'-2	14	4	6"	6'-7	2'-6
	7'	8"	9"	12"	7'-11	32	6	9"	7'-2	14	4	6"	7'-1	2'-6
8'	3'	9"	11"	9"	4'-1	20	5	6"	9'-6	18	5	6"	5'-8	2'-10
	4'	9"	11"	9"	5'-1	24	5	6"	9'-6	18	5	6"	6'-2	2'-10
	5'	9½"	11"	9"	6'-2	24	6	6"	9'-6	18	5	6"	6'-8	2'-10
	6'	9½"	11"	9"	7'-2	28	6	6"	9'-6	18	5	6"	7'-1	2'-9
	7'	9½"	11"	12"	8'-2	32	6	6"	9'-6	18	5	6"	7'-7	2'-9
	8'	9½"	11"	12"	9'-2	32	6	6"	9'-6	18	5	6"	8'-1	2'-9
10'	3'	10½"	13"	8"	4'-4	20	6	6"	11'-10	22	6	6"	6'-9	3'-8
	4'	10½"	13"	8"	5'-4	24	6	6"	11'-10	22	6	6"	7'-2	3'-7
	5'	10½"	13"	9"	6'-4	24	6	6"	11'-10	22	6	6"	7'-7	3'-6
	6'	11"	13"	8"	7'-5	28	7	8"	11'-10	22	6	8"	8'-1	3'-6
	7'	11"	13"	8"	8'-5	32	7	8"	11'-10	22	6	8"	8'-6	3'-5
	8'	11"	13"	10"	9'-5	32	7	7"	11'-10	22	6	7"	9'-0	3'-5
	9'	11½"	13"	11"	10'-6	36	7	7"	11'-10	22	6	7"	9'-6	3'-4
	10'	11½"	13"	11"	11'-6	40	7	6"	11'-10	22	6	9"	10'-0	3'-4
12'	8'	13"	15"	10"	9'-9	32	8	7"	14'-2	26	6	7"	9'-5	3'-8
	9'	13"	15"	10"	10'-9	36	8	7"	14'-2	26	6	7"	9'-11	3'-8
	10'	13"	15"	10"	11'-9	40	8	7"	14'-2	26	6	7"	10'-5	3'-8
	11'	13"	15"	10"	12'-9	40	9	7"	14'-2	26	6	7"	11'-0	3'-9
	12'	13½"	15"	7"	13'-10	44	8	7"	14'-2	26	6	7"	11'-7	3'-9

TABLE NO. III
15'-20' FILL

Span "S"	Height "H"	Slab "T"	Walls "W"	aa Spacing	aa Length	cc Number ✦	ee Bar Size	ee Spacing	ee Length	gg Number ✦	hh Bar Size	hh Spacing	hh Length	F
6'	3'	9"	9"	12"	4'-1	20	5	6"	7'-2	14	4	6"	5'-2	2'-6
	4'	9"	9"	12"	5'-1	24	5	6"	7'-2	14	4	6"	5'-7	2'-6
	5'	9"	9"	12"	6'-1	24	6	8"	7'-2	14	4	6"	6'-2	2'-6
	6'	9"	9"	12"	7'-1	28	6	6"	7'-2	14	4	6"	6'-8	2'-6
	7'	9"	9"	12"	8'-1	32	6	6"	7'-2	14	4	6"	7'-2	2'-6
8'	3'	10½"	11"	7"	4'-4	20	6	7"	9'-6	18	5	7"	5'-7	2'-8
	4'	10½"	11"	10"	5'-4	24	6	6"	9'-6	18	5	6"	6'-1	2'-8
	5'	10½"	11"	9"	6'-4	24	6	6"	9'-6	18	5	6"	6'-7	2'-8
	6'	11"	11"	11"	7'-5	28	7	7"	9'-6	18	5	7"	7'-2	2'-8
	7'	11"	11"	11"	8'-5	32	7	8"	9'-6	18	5	8"	7'-8	2'-8
	8'	11"	11"	12"	9'-5	32	7	6"	9'-6	18	5	8"	8'-2	2'-8
10'	3'	12½"	13"	6"	4'-8	20	6	6"	11'-10	22	6	6"	6'-7	3'-4
	4'	12½"	13"	7"	5'-8	24	7	7"	11'-10	22	6	7"	7'-1	3'-4
	5'	12½"	13"	7"	6'-8	24	7	7"	11'-10	22	6	7"	7'-7	3'-4
	6'	12½"	13"	7"	7'-8	28	7	7"	11'-10	22	6	7"	8'-1	3'-4
	7'	12½"	13"	9"	8'-8	32	7	6"	11'-10	22	5	6"	8'-3	3'-2
	8'	13"	13"	9"	9'-9	32	7	6"	11'-10	22	6	7"	9'-0	3'-5
	9'	13"	13"	10"	10'-9	36	8	6"	11'-10	22	5	6"	9'-4	3'-2
	10'	13"	13"	11"	11'-9	40	8	6"	11'-10	22	5	6"	9'-10	3'-2
12'	8'	15"	15"	10"	10'-1	32	8	7"	14'-2	26	6	7"	9'-6	3'-7
	9'	15"	15"	10"	11'-1	36	9	7"	14'-2	26	6	7"	10'-0	3'-7
	10'	15½"	15"	10"	12'-2	40	8	6"	14'-2	26	6	8"	10'-7	3'-7
	11'	15½"	15"	10"	13'-2	40	8	6"	14'-2	26	6	6"	11'-2	3'-8
	12'	15½"	15"	6"	14'-2	44	8	6"	14'-2	26	6	6"	11'-9	3'-9

TABLE NO. IV
20'-25' FILL

Span "S"	Height "H"	Slab "T"	Walls "W"	aa Spacing	aa Length	cc Number ✦	ee Bar Size	ee Spacing	ee Length	gg Number ✦	hh Bar Size	hh Spacing	hh Length	F
6'	3'	10"	9"	12"	4'-3	20	6	8"	7'-2	14	4	6"	5'-3	2'-6
	4'	10"	9"	12"	5'-3	24	6	6"	7'-2	14	4	6"	5'-9	2'-6
	5'	10"	9"	12"	6'-3	24	6	6"	7'-2	14	4	6"	6'-3	2'-6
	6'	10"	9"	12"	7'-3	28	7	9"	7'-2	14	4	6"	6'-9	2'-6
	7'	10"	9"	12"	8'-3	32	7	9"	7'-2	14	4	6"	7'-3	2'-6
8'	3'	12"	11"	11"	4'-7	20	7	7"	9'-6	18	5	7"	5'-9	2'-8
	4'	12"	11"	12"	5'-7	24	7	8"	9'-6	18	5	6"	6'-1	2'-8
	5'	12"	11"	12"	6'-7	24	7	6"	9'-6	18	5	8"	6'-7	2'-8
	6'	12"	11"	12"	7'-7	28	7	7"	9'-6	18	5	7"	6'-1	2'-8
	7'	12"	11"	12"	8'-7	32	7	6"	9'-6	18	5	9"	6'-7	2'-8
	8'	12½"	11"	12"	9'-8	32	7	6"	9'-6	18	4	6"	6'-1	2'-8
10'	3'	14"	13"	6"	4'-11	20	8	9"	11'-10	22	6	6"	6'-6	3'-2
	4'	14"	13"	6"	5'-11	24	8	8"	11'-10	22	6	8"	7'-0	3'-2
	5'	14"	13"	7"	6'-11	24	8	7"	11'-10	22	6	7"	7'-6	3'-2
	6'	14½"	13"	7"	8'-0	28	8	7"	11'-10	22	6	7"	8'-1	3'-2
	7'	14½"	13"	8"	9'-0	32	9	8"	11'-10	22	5	6"	8'-5	3'-2
	8'	14½"	13"	8"	10'-0	32	9	8"	11'-10	22	5	6"	8'-11	3'-2
	9'	14½"	13"	9"	11'-0	36	9	9"	11'-10	22	5	6"	9'-5	3'-2
	10'	15"	13"	8"	12'-0	40	9	8"	11'-10	22	5	6"	9'-11	3'-2
12'	8'	17"	15"	10"	10'-5	32	8	6"	14'-2	26	5	6"	9'-6	3'-6
	9'	17½"	15"	9"	11'-6	36	9	6"	14'-2	26	6	9"	10'-3	3'-7
	10'	17½"	15"	10"	12'-6	40	10	9"	14'-2	26	5	6"	10'-7	3'-7
	11'	17½"	15"	7"	13'-6	40	9	7"	14'-2	26	6	7"	11'-5	3'-8
	12'	17½"	15"	7"	14'-6	44	10	7"	14'-2	26	6	7"	12'-0	3'-9

✦Total number of bars in the cross-section.

TABLE NO. V
25'-30' FILL

Span "S"	Height "H"	Slab "T"	Walls "W"	aa Spacing	aa Length	cc Number ✦	ee Bar size	ee Spacing	ee Length	gg Number ✦	hh Bar Size	hh Spacing	hh Length	F
6'	3'	10½"	9"	12"	4'-4	20	6	6"	7'-2	14	4	6"	5'-3	2'-6
	4'	11"	9"	12"	5'-5	24	6	6"	7'-2	14	4	6"	5'-10	2'-6
	5'	11"	9"	12"	6'-5	24	6	6"	7'-2	14	4	6"	6'-4	2'-6
	6'	11"	9"	12"	7'-5	28	7	8"	7'-2	14	4	6"	6'-10	2'-6
	7'	11"	9"	12"	8'-5	32	7	8"	7'-2	14	4	6"	7'-4	2'-6
8'	3'	13"	11"	7"	4'-9	20	7	7"	9'-6	18	5	7"	5'-10	2'-8
	4'	13"	11"	10"	5'-9	24	7	6"	9'-6	18	5	6"	6'-4	2'-8
	5'	13½"	11"	10"	6'-10	24	8	8"	9'-6	18	5	8"	6'-10	2'-8
	6'	13½"	11"	11"	7'-10	28	8	8"	9'-6	18	5	8"	7'-4	2'-8
	7'	13½"	11"	11"	8'-10	32	8	6"	9'-6	18	4	6"	7'-10	2'-8
	8'	13½"	11"	12"	9'-10	32	8	8"	9'-6	18	4	6"	8'-4	2'-8
10'	3'	16"	13"	6"	5'-3	20	7	6"	11'-10	22	6	8"	7'-0	3'-5
	4'	16"	13"	7"	6'-3	24	8	7"	11'-10	22	6	7"	7'-6	3'-5
	5'	16"	13"	8"	7'-3	24	8	8"	11'-10	22	6	8"	8'-0	3'-4
	6'	16"	13"	8"	8'-3	28	8	8"	11'-10	22	6	8"	8'-4	3'-4
	7'	16"	13"	8"	9'-3	32	8	8"	11'-10	22	5	6"	8'-8	3'-3
	8'	16"	13"	9"	10'-3	32	8	6"	11'-10	22	5	6"	9'-2	3'-3
	9'	16"	13"	9"	11'-3	36	8	6"	11'-10	22	5	6"	9'-7	3'-2
	10'	16½"	13"	12"	12'-4	40	8	6"	11'-10	22	5	6"	10'-1	3'-2
12'	8'	19½"	15"	8"	10'-10	32	10	8"	14'-2	26	5	6"	9'-8	3'-6
	9'	19½"	15"	10"	11'-10	36	10	7"	14'-2	26	5	7"	10'-2	3'-6
	10'	19½"	15"	10"	12'-10	40	9	6"	14'-2	26	5	6"	10'-8	3'-7
	11'	19½"	15"	8"	13'-10	40	10	8"	14'-2	26	6	8"	11'-6	3'-8
	12'	20"	15"	10"	14'-11	44	9	6"	14'-2	26	6	6"	12'-0	3'-9

QUANTITIES PER LINEAR FOOT OF BARREL

Span "S"	Height "H"	Table I Concrete C.Y.	Table I Reinf. Steel Lbs.	Table II Concrete C.Y.	Table II Reinf. Steel Lbs.	Table III Concrete C.Y.	Table III Reinf. Steel Lbs.	Table IV Concrete C.Y.	Table IV Reinf. Steel Lbs.	Table V Concrete C.Y.	Table V Reinf. Steel Lbs.
6'	3'	0.635	90.0	0.563	95.7	0.611	104.2	0.659	107.7	0.684	118.6
	4'	0.691	104.4	0.618	104.7	0.667	113.2	0.715	127.4	0.763	128.4
	5'	0.746	123.0	0.674	118.4	0.722	121.8	0.771	133.6	0.819	134.7
	6'	0.802	137.8	0.729	126.1	0.778	141.5	0.826	138.6	0.874	144.5
	7'	0.858	146.7	0.785	135.1	0.833	150.4	0.882	147.5	0.930	153.4
8'	3'	0.841	123.8	0.778	123.7	0.872	129.7	0.966	143.5	1.029	150.7
	4'	0.908	138.8	0.846	133.3	0.940	149.2	1.034	150.1	1.097	173.0
	5'	0.976	144.3	0.945	157.9	1.008	157.7	1.102	160.7	1.196	164.0
	6'	1.044	153.3	1.013	166.8	1.107	165.4	1.170	163.8	1.264	170.5
	7'	1.112	177.1	1.081	170.8	1.175	158.8	1.238	171.2	1.332	220.3
	8'	1.180	182.7	1.149	177.0	1.243	181.8	1.337	198.7	1.400	199.5
10'	3'	1.022	151.4	1.060	193.8	1.215	197.7	1.330	210.9	1.485	209.8
	4'	1.102	160.4	1.140	204.6	1.295	206.9	1.410	213.3	1.565	238.6
	5'	1.182	165.0	1.221	210.6	1.375	215.6	1.491	241.0	1.645	220.3
	6'	1.262	173.4	1.340	202.0	1.455	227.0	1.610	253.6	1.725	229.1
	7'	1.343	182.5	1.420	211.6	1.535	225.8	1.690	255.2	1.806	232.1
	8'	1.423	188.1	1.500	235.3	1.654	233.6	1.770	262.5	1.886	267.4
	9'	1.503	198.3	1.619	243.4	1.735	269.9	1.850	255.2	1.966	276.4
	10'	1.622	206.4	1.699	244.4	1.815	276.6	1.969	282.4	2.085	277.7
12'	8'	1.803	313.2	1.940	289.8	2.123	291.5	2.307	295.4	2.535	336.2
	9'	1.896	325.9	2.033	300.2	2.216	337.3	2.445	348.2	2.628	352.8
	10'	1.988	353.4	2.126	310.5	2.354	321.2	2.538	326.2	2.721	357.9
	11'	2.127	345.8	2.218	354.4	2.447	362.5	2.630	375.1	2.813	373.9
	12'	2.219	414.3	2.356	345.2	2.540	398.4	2.723	431.2	2.952	421.0

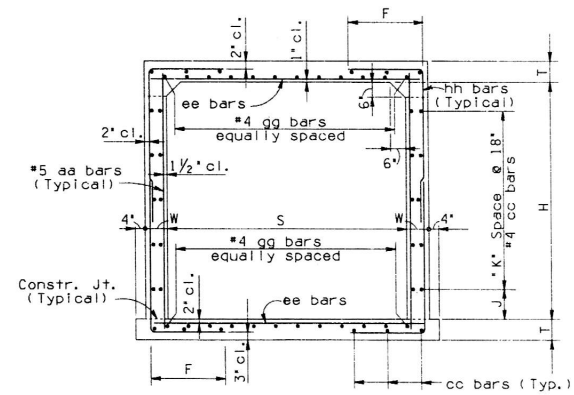

Height "H"	"J" Dim.	"K" Spaces
3'	9"	1
4'	3"	2
5'	12"	2
6'	9"	3
7'	3"	4
8'	12"	4
9'	9"	5
10'	3"	6
11'	12"	6
12'	9"	7

TYPICAL SECTION

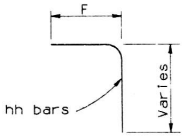

BENDS

NOTE: See B-01.10 for General Notes and Miscellaneous Details.

DESIGN APPROVED	ARIZONA DEPARTMENT OF TRANSPORTATION HIGHWAYS DIVISION STANDARD DRAWINGS	REVISION
APPROVED FOR DISTRIBUTION	SINGLE BARREL BOX CULVERT	STANDARD NO. B-02.10

CADD FILENAME= ZFA
VIEW NAME= 02

DESIGN				NO	DESCRIPTION OF REVISIONS	MADE BY	DATE
DRAWN				1	Total Redesign of Box	J. M.	6-88
CHECKED				2			
				3			
				4			

TABLE I
0'-10' FILL

Span "S"	Height "H"	Top Slab "T"	Walls "W"	aa Bar Size	aa Spacing	aa Length	bb Bar Size	bb Spacing	bb Length	cc ✦ Number	dd Bar Size	dd Spacing	dd Length	dd A	dd B	dd C	ee Bar Size	ee Spacing	ee Length	ff Bar Size	ff Spacing	ff Length	gg ✦ Number	gg D	hh Bar Size	hh Spacing	hh Length	hh F
6'	3'	9½"	8"	5	12"	4'-4	5	12"	8'-9	48	5	14"	13'-2	4'-7	2'-7	6½"	5	14"	13'-7	5	14"	13'-7	20	3'-0	4	7"	5'-1	2'-5
	4'	9½"	8"	5	12"	5'-4	5	12"	10'-9	54	5	14"	13'-2	4'-7	2'-7	6½"	5	14"	13'-7	5	14"	13'-7	20	3'-0	4	7"	5'-7	2'-5
	5'	9½"	8"	5	12"	6'-4	5	12"	12'-9	54	5	14"	13'-2	4'-7	2'-7	6½"	5	14"	13'-7	5	14"	13'-7	20	3'-0	4	7"	6'-1	2'-5
	6'	9½"	8"	5	12"	7'-4	5	12"	14'-9	60	5	14"	13'-2	4'-7	2'-7	6½"	5	14"	13'-7	5	14"	13'-7	20	3'-0	4	7"	6'-7	2'-5
	7'	9½"	8"	5	12"	8'-4	5	12"	16'-9	66	5	13"	13'-2	4'-7	2'-7	6½"	5	13"	13'-7	5	13"	13'-7	20	3'-0	4	6½"	7'-1	2'-5
8'	3'	9½"	9"	5	12"	4'-4	5	12"	8'-9	48	6	14"	17'-2	6'-1	3'-8	6½"	6	14"	17'-10	6	14"	17'-10	28	4'-0	6	7"	5'-6	2'-6
	4'	9½"	9"	5	12"	5'-4	5	12"	10'-9	54	6	14"	17'-2	6'-1	3'-8	6½"	6	14"	17'-10	6	14"	17'-10	28	4'-0	6	7"	6'-0	2'-6
	5'	9½"	9"	5	12"	6'-4	5	12"	12'-9	54	6	14"	17'-2	6'-1	3'-8	6½"	6	14"	17'-10	6	14"	17'-10	28	4'-0	6	7"	6'-6	2'-6
	6'	9½"	9"	5	12"	7'-4	5	12"	14'-9	60	6	14"	17'-2	6'-1	3'-8	6½"	6	14"	17'-10	6	14"	17'-10	28	4'-0	6	7"	7'-0	2'-6
	7'	9½"	9"	5	12"	8'-4	5	12"	16'-9	66	6	13"	17'-2	6'-1	3'-8	6½"	6	13"	17'-10	6	13"	17'-10	28	4'-0	5	6½"	7'-5	2'-6
	8'	9½"	9"	5	12"	9'-4	5	12"	18'-9	66	6	13"	17'-2	6'-1	3'-8	6½"	6	13"	17'-10	6	13"	17'-10	28	4'-0	6	6½"	8'-0	2'-6
10'	3'	10½"	11"	5	12"	4'-6	5	12"	9'-2	48	7	17"	21'-5	7'-7	4'-8	7½"	6	17"	22'-4	7	17"	22'-4	32	5'-0	6	8½"	6'-0	3'-0
	4'	10½"	11"	5	12"	5'-6	5	12"	11'-2	54	7	17"	21'-5	7'-7	4'-8	7½"	6	17"	22'-4	7	17"	22'-4	32	5'-0	6	8½"	6'-7	3'-0
	5'	10½"	11"	5	12"	6'-6	5	12"	13'-2	54	6	12"	21'-5	7'-7	4'-8	7½"	5	12"	22'-4	6	12"	22'-4	32	5'-0	5	6'	6'-8	2'-8
	6'	10½"	11"	5	12"	7'-6	5	12"	15'-2	60	6	12"	21'-5	7'-7	4'-8	7½"	5	12"	22'-4	6	12"	22'-4	32	5'-0	5	6'	7'-2	2'-8
	7'	10½"	11"	5	12"	8'-6	5	12"	17'-2	66	7	15"	21'-5	7'-7	4'-8	7½"	5	15"	22'-4	7	15"	22'-4	32	5'-0	6	7½"	7'-9	2'-8
	8'	10½"	11"	5	12"	9'-6	5	12"	19'-2	66	7	15"	21'-5	7'-7	4'-8	7½"	5	15"	22'-4	7	15"	22'-4	32	5'-0	6	7½"	8'-3	2'-8
	9'	10½"	11"	5	12"	10'-6	5	12"	21'-2	72	7	15"	21'-5	7'-7	4'-8	7½"	6	15"	22'-4	7	15"	22'-4	32	5'-0	6	7½"	8'-9	2'-8
	10'	10½"	11"	5	12"	11'-6	5	12"	23'-2	78	7	14"	21'-5	7'-7	4'-8	7½"	5	14"	22'-4	7	14"	22'-4	32	5'-0	6	7"	9'-3	2'-8
12'	8'	12½"	13"	5	12"	9'-10	5	12"	20'-0	66	7	13"	25'-8	9'-1	5'-6	9½"	5	13"	26'-10	7	13"	26'-10	40	6'-0	6	6½"	8'-6	2'-10
	9'	12½"	13"	5	12"	10'-10	5	12"	22'-0	72	8	16"	25'-8	9'-1	5'-6	9½"	5	16"	26'-10	8	16"	26'-10	40	6'-0	6	8"	9'-0	2'-10
	10'	12½"	13"	5	12"	11'-10	5	12"	24'-0	78	8	16"	25'-8	9'-1	5'-6	9½"	5	16"	26'-10	8	16"	26'-10	40	6'-0	6	8"	9'-6	2'-10
	11'	12½"	13"	5	12"	12'-10	5	12"	26'-0	78	7	12"	25'-8	9'-1	5'-6	9½"	4	12"	26'-10	7	12"	26'-10	40	6'-0	6	6"	10'-0	2'-10
	12'	12½"	13"	5	12"	13'-10	5	12"	28'-0	84	7	12"	25'-8	9'-1	5'-6	9½"	5	12"	26'-10	7	12"	26'-10	40	6'-0	6	6"	10'-6	2'-10

TABLE NO. II
10'-15' FILL

Span "S"	Height "H"	Top Slab "T"	Walls "W"	aa Bar Size	aa Spacing	aa Length	bb Bar Size	bb Spacing	bb Length	cc ✦ Number	dd Bar Size	dd Spacing	dd Length	dd A	dd B	dd C	ee Bar Size	ee Spacing	ee Length	ff Bar Size	ff Spacing	ff Length	gg ✦ Number	gg D	hh Bar Size	hh Spacing	hh Length	hh F
6'	3'	8"	8"	5	12"	4'-1	5	12"	8'-3	48	5	14"	13'-0	4'-7	2'-10	5"	5	14"	13'-7	5	14"	13'-7	16	3'-0	4	7"	5'-0	2'-5
	4'	8"	8"	5	12"	5'-1	5	12"	10'-3	54	5	14"	13'-0	4'-7	2'-10	5"	5	14"	13'-7	5	14"	13'-7	16	3'-0	4	7"	5'-6	2'-5
	5'	8"	8"	5	12"	6'-1	5	12"	12'-3	54	5	14"	13'-0	4'-7	2'-10	5"	5	14"	13'-7	5	14"	13'-7	16	3'-0	4	7"	6'-0	2'-5
	6'	8"	8"	5	12"	7'-1	5	12"	14'-3	60	5	14"	13'-0	4'-7	2'-10	5"	5	14"	13'-7	5	14"	13'-7	16	3'-0	4	7"	6'-6	2'-5
	7'	8"	8"	5	12"	8'-1	5	12"	16'-3	66	5	14"	13'-0	4'-7	2'-10	5"	5	14"	13'-7	5	14"	13'-7	16	3'-0	4	7"	7'-0	2'-5
8'	3'	10½"	9"	5	12"	4'-6	5	12"	9'-2	48	6	13"	17'-3	6'-1	3'-6	7½"	5	13"	17'-10	6	13"	17'-10	20	4'-0	4	6½"	5'-3	2'-6
	4'	10½"	9"	5	12"	5'-6	5	12"	11'-2	54	6	13"	17'-3	6'-1	3'-6	7½"	4	13"	17'-10	6	13"	17'-10	20	4'-0	4	6½"	5'-9	2'-6
	5'	10½"	9"	5	12"	6'-6	5	12"	13'-2	54	6	13"	17'-3	6'-1	3'-6	7½"	4	13"	17'-10	6	13"	17'-10	20	4'-0	4	6½"	6'-3	2'-6
	6'	10½"	9"	5	12"	7'-6	5	12"	15'-2	60	6	13"	17'-3	6'-1	3'-6	7½"	4	13"	17'-10	6	13"	17'-10	20	4'-0	4	6½"	6'-9	2'-6
	7'	10½"	9"	5	12"	8'-6	5	12"	17'-2	66	6	13"	17'-3	6'-1	3'-6	7½"	4	13"	17'-10	6	13"	17'-10	20	4'-0	4	6½"	7'-3	2'-6
	8'	10½"	9"	5	12"	9'-6	5	12"	19'-2	66	6	12"	17'-3	6'-1	3'-6	7½"	4	12"	17'-10	6	12"	17'-10	20	4'-0	4	6"	7'-9	2'-6
10'	3'	12½"	11"	5	12"	4'-10	5	12"	9'-10	48	7	14"	21'-6	7'-7	4'-4	9½"	4	14"	22'-4	7	14"	22'-4	24	5'-0	5	7"	5'-10	2'-8
	4'	12½"	11"	5	12"	5'-10	5	12"	11'-10	54	7	13"	21'-6	7'-7	4'-4	9½"	4	13"	22'-4	7	13"	22'-4	24	5'-0	4	6½"	6'-4	2'-8
	5'	12½"	11"	5	12"	6'-10	5	12"	13'-10	54	7	14"	21'-6	7'-7	4'-4	9½"	4	14"	22'-4	7	14"	22'-4	24	5'-0	5	7"	6'-10	2'-8
	6'	12½"	11"	5	12"	7'-10	5	12"	15'-10	60	7	13"	21'-6	7'-7	4'-4	9½"	4	13"	22'-4	7	13"	22'-4	24	5'-0	5	6½"	7'-4	2'-8
	7'	12½"	11"	5	12"	8'-10	5	12"	17'-10	66	7	13"	21'-6	7'-7	4'-4	9½"	4	13"	22'-4	7	13"	22'-4	24	5'-0	5	6½"	7'-10	2'-8
	8'	12½"	11"	5	12"	9'-10	5	12"	19'-10	66	7	13"	21'-6	7'-7	4'-4	9½"	4	13"	22'-4	7	13"	22'-4	24	5'-0	5	6½"	8'-4	2'-8
	9'	12½"	11"	5	12"	10'-10	5	12"	21'-10	72	7	13"	21'-6	7'-7	4'-4	9½"	4	13"	22'-4	7	13"	22'-4	24	5'-0	5	6½"	8'-10	2'-8
	10'	12½"	11"	5	12"	11'-10	5	12"	23'-10	78	7	13"	21'-6	7'-7	4'-4	9½"	4	13"	22'-4	7	13"	22'-4	24	5'-0	5	6½"	9'-4	2'-8
12'	8'	15"	13"	5	12"	10'-3	5	12"	20'-9	66	8	15"	25'-7	9'-1	5'-1	12"	4	15"	26'-10	8	15"	26'-10	28	6'-0	6	7½"	8'-9	2'-11
	9'	15"	13"	5	12"	11'-3	5	12"	22'-9	72	8	15"	25'-7	9'-1	5'-1	12"	4	15"	26'-10	8	15"	26'-10	28	6'-0	6	7½"	9'-3	2'-11
	10'	15"	13"	5	12"	12'-3	5	12"	24'-9	78	8	15"	25'-7	9'-1	5'-1	12"	5	15"	26'-10	8	15"	26'-10	28	6'-0	6	7½"	9'-9	2'-11
	11'	15"	13"	5	12"	13'-3	5	12"	26'-9	78	8	14"	25'-7	9'-1	5'-1	12"	4	14"	26'-10	8	14"	26'-10	28	6'-0	5	7"	10'-9	3'-5
	12'	15"	13"	5	12"	14'-3	5	12"	28'-9	84	8	14"	25'-7	9'-1	5'-1	12"	5	14"	26'-10	8	14"	26'-10	28	6'-0	6	7"	11'-3	3'-5

✦ Total number of bars in the cross-section.

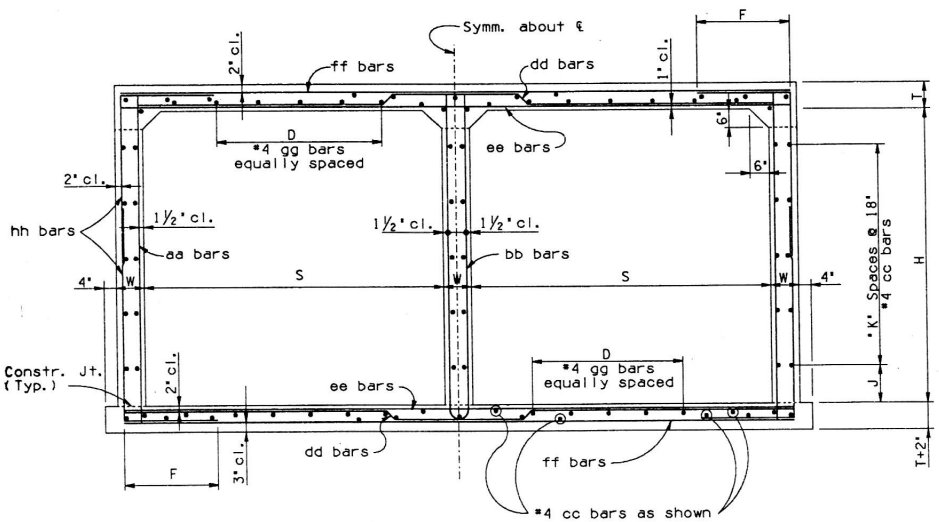

TYPICAL SECTION

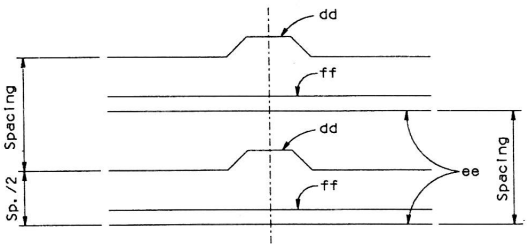

REINFORCING BAR PLACING DIAGRAM

Height "H"	"J" Dim.	"K" Spaces
3'	9"	1
4'	3"	2
5'	12"	2
6'	9"	3
7'	3"	4
8'	12"	4
9'	9"	5
10'	3"	6
11'	12"	6
12'	9"	7

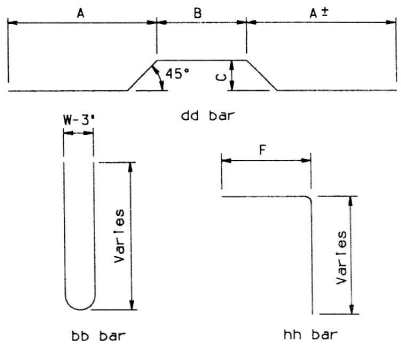

BENDS

NOTE:
See B-02.25 for Tables III thru V.
See B-01.10 for General Notes and Miscellaneous Details.
See B-02.70 for Quantities.

	DESIGN APPROVED	ARIZONA DEPARTMENT OF TRANSPORTATION HIGHWAYS DIVISION STANDARD DRAWINGS	REVISION 7-88
	APPROVED FOR DISTRIBUTION	DOUBLE BARREL BOX CULVERT	STANDARD NO. B-02.20

CADD FILENAME= 2FA
VIEW NAME=

DESIGN			NO.	DESCRIPTION OF REVISIONS	MADE BY	DATE
DRAWN			1	Total Redesign of Box	J. W.	6-88
CHECKED			2			
			3			
			4			

TABLE NO. III
15'-20' FILL

Span "S"	Height "H"	Top Slab "T"	Walls "W"	aa Bar Size	aa Spacing	aa Length	bb Bar Size	bb Spacing	bb Length	cc ✦ Number	dd Bar Size	dd Spacing	dd Length	dd A	dd B	dd C	ee Bar Size	ee Spacing	ee Length	ff Bar Size	ff Spacing	ff Length	gg ✦ Number	gg D	hh Bar Size	hh Spacing	hh Length	hh F
6'	3'	9½"	8"	5	12"	4'-4	5	12"	8'-9	48	5	13"	13'-2	4'-7	2'-7	6½"	5	13"	13'-7	5	13"	13'-7	16	3'-0	4	6½"	5'-1	2'-5
	4'	9½"	8"	5	12"	5'-4	5	12"	10'-9	54	5	13"	13'-2	4'-7	2'-7	6½"	5	13"	13'-7	5	13"	13'-7	16	3'-0	4	6½"	5'-7	2'-5
	5'	9½"	8"	5	12"	6'-4	5	12"	12'-9	54	5	13"	13'-2	4'-7	2'-7	6½"	5	13"	13'-7	5	13"	13'-7	16	3'-0	4	6½"	6'-1	2'-5
	6'	9½"	8"	5	12"	7'-4	5	12"	14'-9	60	5	13"	13'-2	4'-7	2'-7	6½"	5	13"	13'-7	5	13"	13'-7	16	3'-0	4	6½"	6'-7	2'-5
	7'	9½"	8"	5	12"	8'-4	5	12"	16'-9	66	5	13"	13'-2	4'-7	2'-7	6½"	5	13"	13'-7	16	3'-0	4	6½"	7'-1	2'-5
8'	3'	12"	9"	5	12"	4'-9	5	12"	9'-8	48	6	12"	17'-4	6'-1	3'-3	9"	4	12"	17'-10	6	12"	17'-10	20	4'-0	4	6"	5'-5	2'-6
	4'	12"	9"	5	12"	5'-9	5	12"	11'-8	54	6	12"	17'-4	6'-1	3'-3	9"	4	12"	17'-10	6	12"	17'-10	20	4'-0	4	6"	5'-11	2'-6
	5'	12"	9"	5	12"	6'-9	5	12"	13'-8	54	6	12"	17'-4	6'-1	3'-3	9"	4	12"	17'-10	6	12"	17'-10	20	4'-0	4	6"	6'-5	2'-6
	6'	12"	9"	5	12"	7'-9	5	12"	15'-8	60	6	12"	17'-4	6'-1	3'-3	9"	4	12"	17'-10	6	12"	17'-10	20	4'-0	4	6"	6'-11	2'-6
	7'	12"	9"	5	12"	8'-9	5	12"	17'-8	66	6	12"	17'-4	6'-1	3'-3	9"	4	12"	17'-10	6	12"	17'-10	20	4'-0	4	6"	7'-5	2'-6
	8'	12"	9"	5	12"	9'-9	5	12"	19'-8	66	6	12"	17'-4	6'-1	3'-3	9"	4	12"	17'-10	6	12"	17'-10	20	4'-0	4	6"	7'-11	2'-6
10'	3'	15"	11"	5	12"	5'-3	5	12"	10'-8	48	7	13"	21'-9	7'-7	3'-11	1'-0	4	13"	22'-4	7	13"	22'-4	24	5'-0	5	6½"	6'-0	2'-8
	4'	15"	11"	5	12"	6'-3	5	12"	12'-8	54	7	13"	21'-9	7'-7	3'-11	1'-0	4	13"	22'-4	7	13"	22'-4	24	5'-0	5	6½"	6'-6	2'-8
	5'	15"	11"	5	12"	7'-3	5	12"	14'-8	54	7	13"	21'-9	7'-7	3'-11	1'-0	4	13"	22'-4	7	13"	22'-4	24	5'-0	5	6½"	7'-0	2'-8
	6'	15"	11"	5	12"	8'-3	5	12"	16'-8	60	7	13"	21'-9	7'-7	3'-11	1'-0	4	13"	22'-4	7	13"	22'-4	24	5'-0	5	6½"	7'-6	2'-8
	7'	15"	11"	5	12"	9'-3	5	12"	18'-8	66	7	13"	21'-9	7'-7	3'-11	1'-0	4	13"	22'-4	7	13"	22'-4	24	5'-0	5	6½"	8'-0	2'-8
	8'	15"	11"	5	12"	10'-3	5	12"	20'-8	66	7	13"	21'-9	7'-7	3'-11	1'-0	4	13"	22'-4	7	13"	22'-4	24	5'-0	5	6½"	8'-6	2'-8
	9'	15"	11"	5	12"	11'-3	5	12"	22'-8	72	7	13"	21'-9	7'-7	3'-11	1'-0	4	13"	22'-4	7	13"	22'-4	24	5'-0	5	6½"	9'-0	2'-8
	10'	15"	11"	5	12"	12'-3	5	12"	24'-8	78	7	13"	21'-9	7'-7	3'-11	1'-0	4	13"	22'-4	7	13"	22'-4	24	5'-0	5	6½"	9'-6	2'-9
12'	8'	18"	13"	5	12"	10'-9	5	12"	21'-6	66	8	14"	26'-1	9'-1	4'-7	1'-3	4	14"	26'-10	8	14"	26'-10	28	6'-0	5	7"	9'-6	3'-5
	9'	18"	13"	5	12"	11'-9	5	12"	23'-6	72	8	14"	26'-1	9'-1	4'-7	1'-3	4	14"	26'-10	8	14"	26'-10	28	6'-0	5	7"	10'-0	3'-5
	10'	18"	13"	5	12"	12'-9	5	12"	25'-6	78	8	14"	26'-1	9'-1	4'-7	1'-3	4	14"	26'-10	8	14"	26'-10	28	6'-0	6	7"	10'-7	3'-5
	11'	18"	13"	5	12"	13'-9	5	12"	27'-6	78	8	14"	26'-1	9'-1	4'-7	1'-3	5	14"	26'-10	8	14"	26'-10	28	6'-0	6	7"	11'-1	3'-5
	12'	18"	13"	5	12"	14'-9	5	12"	29'-6	84	8	14"	26'-1	9'-1	4'-7	1'-3	5	14"	26'-10	8	14"	26'-10	28	6'-0	6	7"	11'-7	3'-5

TABLE NO. IV
20'-25' FILL

Span "S"	Height "H"	Top Slab "T"	Walls "W"	aa Bar Size	aa Spacing	aa Length	bb Bar Size	bb Spacing	bb Length	cc ✦ Number	dd Bar Size	dd Spacing	dd Length	dd A	dd B	dd C	ee Bar Size	ee Spacing	ee Length	ff Bar Size	ff Spacing	ff Length	gg ✦ Number	gg D	hh Bar Size	hh Spacing	hh Length	hh F
6'	3'	11"	8"	5	12"	4'-7	5	12"	9'-2	48	5	12"	13'-3	4'-7	2'-4	8"	5	12"	13'-7	5	12"	13'-7	16	3'-0	4	6"	5'-3	2'-5
	4'	11"	8"	5	12"	5'-7	5	12"	11'-2	54	5	12"	13'-3	4'-7	2'-4	8"	5	12"	13'-7	5	12"	13'-7	16	3'-0	4	6"	5'-9	2'-5
	5'	11"	8"	5	12"	6'-7	5	12"	13'-2	54	5	12"	13'-3	4'-7	2'-4	8"	5	12"	13'-7	5	12"	13'-7	16	3'-0	4	6"	6'-3	2'-5
	6'	11"	8"	5	12"	7'-7	5	12"	15'-2	60	5	12"	13'-3	4'-7	2'-4	8"	5	12"	13'-7	5	12"	13'-7	16	3'-0	4	6"	6'-9	2'-5
	7'	11"	8"	5	12"	8'-7	5	12"	17'-2	66	5	12"	13'-3	4'-7	2'-4	8"	5	12"	13'-7	5	12"	13'-7	16	3'-0	4	6"	7'-3	2'-5
8'	3'	14"	9"	5	12"	5'-1	5	12"	10'-2	48	6	12"	17'-6	6'-1	2'-11	11"	4	12"	17'-10	6	12"	17'-10	20	4'-0	4	6"	5'-7	2'-6
	4'	14"	9"	5	12"	6'-1	5	12"	12'-2	54	6	12"	17'-6	6'-1	2'-11	11"	4	12"	17'-10	6	12"	17'-10	20	4'-0	4	6"	6'-1	2'-6
	5'	14"	9"	5	12"	7'-1	5	12"	14'-2	54	6	12"	17'-6	6'-1	2'-11	11"	4	12"	17'-10	6	12"	17'-10	20	4'-0	4	6"	6'-7	2'-6
	6'	14"	9"	5	12"	8'-1	5	12"	16'-2	60	6	12"	17'-6	6'-1	2'-11	11"	4	12"	17'-10	6	12"	17'-10	20	4'-0	4	6"	7'-1	2'-6
	7'	14"	9"	5	12"	9'-1	5	12"	18'-2	66	6	12"	17'-6	6'-1	2'-11	11"	4	12"	17'-10	6	12"	17'-10	20	4'-0	4	6"	7'-7	2'-6
	8'	14"	9"	5	12"	10'-1	5	12"	20'-2	66	6	12"	17'-6	6'-1	2'-11	11"	4	12"	17'-10	6	12"	17'-10	20	4'-0	4	6"	8'-1	2'-6
10'	3'	17"	11"	5	12"	5'-7	5	12"	11'-2	48	7	13"	21'-10	7'-7	3'-7	1'-2	4	13"	22'-4	7	13"	22'-4	24	5'-0	5	6½"	6'-3	2'-9
	4'	17"	11"	5	12"	6'-7	5	12"	13'-2	54	7	13"	21'-10	7'-7	3'-7	1'-2	4	13"	22'-4	7	13"	22'-4	24	5'-0	5	6½"	6'-9	2'-9
	5'	17"	11"	5	12"	7'-7	5	12"	15'-2	54	7	13"	21'-10	7'-7	3'-7	1'-2	4	13"	22'-4	7	13"	22'-4	24	5'-0	5	6½"	7'-3	2'-9
	6'	17"	11"	5	12"	8'-7	5	12"	17'-2	60	7	13"	21'-10	7'-7	3'-7	1'-2	4	13"	22'-4	7	13"	22'-4	24	5'-0	5	6½"	7'-9	2'-9
	7'	17"	11"	5	12"	9'-7	5	12"	19'-2	66	7	13"	21'-10	7'-7	3'-7	1'-2	4	13"	22'-4	7	13"	22'-4	24	5'-0	5	6½"	8'-3	2'-9
	8'	17"	11"	5	12"	10'-7	5	12"	21'-2	66	7	13"	21'-10	7'-7	3'-7	1'-2	4	13"	22'-4	7	13"	22'-4	24	5'-0	5	6½"	8'-9	2'-9
	9'	17"	11"	5	12"	11'-7	5	12"	23'-2	72	7	13"	21'-10	7'-7	3'-7	1'-2	4	13"	22'-4	7	13"	22'-4	24	5'-0	5	6½"	9'-3	2'-9
	10'	17"	11"	5	12"	12'-7	5	12"	25'-2	78	7	13"	21'-10	7'-7	3'-7	1'-2	4	13"	22'-4	7	13"	22'-4	24	5'-0	5	6½"	9'-9	2'-9
12'	8'	20½"	13"	5	12"	11'-2	5	12"	22'-6	66	8	14"	26'-3	9'-1	4'-2	1'-5½	5	14"	26'-10	8	14"	26'-10	28	6'-0	6	7"	9'-3	2'-11
	9'	20½"	13"	5	12"	12'-2	5	12"	24'-6	72	8	14"	26'-3	9'-1	4'-2	1'-5½	5	14"	26'-10	8	14"	26'-10	28	6'-0	6	7"	9'-9	2'-11
	10'	20½"	13"	5	12"	13'-2	5	12"	26'-6	78	8	14"	26'-3	9'-1	4'-2	1'-5½	5	14"	26'-10	8	14"	26'-10	28	6'-0	6	7"	10'-3	2'-11
	11'	20½"	13"	5	12"	14'-2	5	12"	28'-6	78	8	14"	26'-3	9'-1	4'-2	1'-5½	5	14"	26'-10	8	14"	26'-10	28	6'-0	6	7"	11'-3	3'-5
	12'	20½"	13"	5	12"	15'-2	5	12"	30'-6	84	8	13"	26'-3	9'-1	4'-2	1'-5½	5	13"	26'-10	8	13"	26'-10	28	6'-0	5	6½"	11'-9	3'-5

✦ Total number of bars in the cross-section.

TABLE NO. V
25'-30' FILL

Span "S"	Height "H"	Top Slab "T"	Walls "W"	aa Bar Size	aa Spacing	aa Length	bb Bar Size	bb Spacing	bb Length	cc ✦ Number	dd Bar Size	dd Spacing	dd Length	dd A	dd B	dd C	ee Bar Size	ee Spacing	ee Length	ff Bar Size	ff Spacing	ff Length	gg ✦ Number	gg D	hh Bar Size	hh Spacing	hh Length	hh F
6'	3'	12½"	8"	5	12"	4'-10	5	12"	9'-10	48	6	16"	13'-4	4'-7	2'-1	9½"	6	16"	13'-7	6	16"	13'-7	16	3'-0	4	8"	5'-4	2'-5
	4'	12½"	8"	5	12"	5'-10	5	12"	11'-10	54	6	16"	13'-4	4'-7	2'-1	9½"	6	16"	13'-7	6	16"	13'-7	16	3'-0	4	8"	5'-10	2'-5
	5'	12½"	8"	5	12"	6'-10	5	12"	13'-10	54	6	16"	13'-4	4'-7	2'-1	9½"	6	16"	13'-7	6	16"	13'-7	16	3'-0	4	8"	6'-4	2'-5
	6'	12½"	8"	5	12"	7'-10	5	12"	15'-10	60	5	12"	13'-4	4'-7	2'-1	9½"	5	12"	13'-7	5	12"	13'-7	16	3'-0	4	6"	6'-10	2'-5
	7'	12½"	8"	5	12"	8'-10	5	12"	17'-10	66	5	12"	13'-4	4'-7	2'-1	9½"	5	12"	13'-7	5	12"	13'-7	16	3'-0	4	6"	7'-4	2'-5
8'	3'	16"	9"	5	12"	5'-5	5	12"	11'-0	48	7	16"	17'-7	6'-1	2'-7	1'-1	4	16"	17'-10	7	16"	17'-10	20	4'-0	5	8"	6'-0	2'-7
	4'	16"	9"	5	12"	6'-5	5	12"	13'-0	54	7	16"	17'-7	6'-1	2'-7	1'-1	4	16"	17'-10	7	16"	17'-10	20	4'-0	5	8"	6'-6	2'-7
	5'	16"	9"	5	12"	7'-5	5	12"	15'-0	54	6	12"	17'-7	6'-1	2'-7	1'-1	4	12"	17'-10	6	12"	17'-10	20	4'-0	4	6"	6'-9	2'-6
	6'	16"	9"	5	12"	8'-5	5	12"	17'-0	60	6	12"	17'-7	6'-1	2'-7	1'-1	4	12"	17'-10	6	12"	17'-10	20	4'-0	4	6"	7'-3	2'-6
	7'	16"	9"	5	12"	9'-5	5	12"	19'-0	66	6	12"	17'-7	6'-1	2'-7	1'-1	4	12"	17'-10	6	12"	17'-10	20	4'-0	4	6"	7'-9	2'-6
	8'	16"	9"	5	12"	10'-5	5	12"	21'-0	66	6	12"	17'-7	6'-1	2'-7	1'-1	4	12"	17'-10	6	12"	17'-10	20	4'-0	4	6"	8'-3	2'-6
10'	3'	19"	11"	5	12"	5'-11	5	12"	11'-9	48	7	12"	22'-0	7'-7	3'-3	1'-4	4	12"	22'-4	7	12"	22'-4	24	5'-0	5	6"	6'-6	2'-9
	4'	19"	11"	5	12"	6'-11	5	12"	13'-9	54	7	12"	22'-0	7'-7	3'-3	1'-4	4	12"	22'-4	7	12"	22'-4	24	5'-0	5	6"	7'-0	2'-9
	5'	19"	11"	5	12"	7'-11	5	12"	15'-9	54	7	12"	22'-0	7'-7	3'-3	1'-4	4	12"	22'-4	7	12"	22'-4	24	5'-0	5	6"	7'-6	2'-9
	6'	19"	11"	5	12"	8'-11	5	12"	17'-9	60	7	12"	22'-0	7'-7	3'-3	1'-4	4	12"	22'-4	7	12"	22'-4	24	5'-0	5	6"	8'-0	2'-9
	7'	19"	11"	5	12"	9'-11	5	12"	19'-9	66	7	12"	22'-0	7'-7	3'-3	1'-4	4	12"	22'-4	7	12"	22'-4	24	5'-0	5	6"	8'-6	2'-9
	8'	19"	11"	5	12"	10'-11	5	12"	21'-9	66	7	12"	22'-0	7'-7	3'-3	1'-4	4	12"	22'-4	7	12"	22'-4	24	5'-0	5	6"	9'-0	2'-9
	9'	19"	11"	5	12"	11'-11	5	12"	23'-9	72	7	12"	22'-0	7'-7	3'-3	1'-4	4	12"	22'-4	7	12"	22'-4	24	5'-0	5	6"	9'-6	2'-9
	10'	19"	11"	5	11½"	12'-11	5	12"	25'-9	78	7	12"	22'-0	7'-7	3'-3	1'-4	4	12"	22'-4	7	12"	22'-4	24	5'-0	5	6"	10'-0	2'-9
12'	8'	23"	13"	5	12"	11'-7	5	12"	23'-0	66	8	14"	26'-5	9'-1	3'-9	1'-8	5	14"	26'-10	8	14"	26'-10	28	6'-0	6	7"	10'-0	3'-5
	9'	23"	13"	5	12"	12'-7	5	12"	25'-0	72	8	14"	26'-5	9'-1	3'-9	1'-8	5	14"	26'-10	8	14"	26'-10	28	6'-0	6	7"	10'-6	3'-5
	10'	23"	13"	5	12"	13'-7	5	12"	27'-0	78	8	14"	26'-5	9'-1	3'-9	1'-8	5	14"	26'-10	8	14"	26'-10	28	6'-0	6	7"	11'-0	3'-5
	11'	23"	13"	5	12"	14'-7	5	12"	29'-0	78	8	14"	26'-5	9'-1	3'-9	1'-8	5	14"	26'-10	8	14"	26'-10	28	6'-0	6	7"	11'-6	3'-5
	12'	23"	13"	5	9½"	15'-7	5	12"	31'-0	84	8	14"	26'-5	9'-1	3'-9	1'-8	6	14"	26'-10	8	14"	26'-10	28	6'-0	6	7"	12'-0	3'-5

DESIGN APPROVED	ARIZONA DEPARTMENT OF TRANSPORTATION HIGHWAYS DIVISION STANDARD DRAWINGS	REVISION 7-88
APPROVED FOR DISTRIBUTION	DOUBLE BARREL BOX CULVERT	STANDARD NO. B-02.25

CADD FILENAME= IFA
VIEW NAME=

DESIGN			NO	DESCRIPTION OF REVISIONS	MADE BY	DATE
DRAWN			1	Total Redesign of Box	C.H.	6-88
CHECKED			2			
			3			
			4			

TABLE NO. I
0'-10' FILL

Span "S"	Height "H"	Top Slab "T"	Walls "W"	aa Spacing	aa Length	bb Spacing	bb Length	cc Number ✦	dd Bar Size	dd Spacing	dd Length	dd A	dd B	dd C	dd D	ee Bar Size	ee Spacing	ee Length	ff Bar Size	ff Spacing	ff Length	gg Number ✦	hh Bar Size	hh Spacing	hh Length	hh F
6'	3'	9½"	8"	12"	4'-4	12"	8'-9	68	5	14"	20'-2	4'-7	2'-7	6½"	3'-1	5	14"	20'-3	5	14"	20'-3	30	4	7"	5'-1	2'-5
	4'	9½"	8"	12"	5'-4	12"	10'-9	76	5	14"	20'-2	4'-7	2'-7	6½"	3'-1	5	14"	20'-3	5	14"	20'-3	30	4	7"	5'-7	2'-5
	5'	9½"	8"	12"	6'-4	12"	12'-9	76	5	14"	20'-2	4'-7	2'-7	6½"	3'-1	5	14"	20'-3	5	14"	20'-3	30	4	7"	6'-1	2'-5
	6'	9½"	8"	12"	7'-4	12"	14'-9	84	5	14"	20'-2	4'-7	2'-7	6½"	3'-1	5	14"	20'-3	5	14"	20'-3	30	4	7"	6'-7	2'-5
	7'	9½"	8"	12"	8'-4	12"	16'-9	92	5	13"	20'-2	4'-7	2'-7	6½"	3'-1	5	13"	20'-3	5	13"	20'-3	30	4	6½"	7'-1	2'-5
8'	3'	9½"	9"	12"	4'-4	12"	8'-9	68	6	14"	26'-4	6'-1	3'-8	6½"	4'-2	6	14"	26'-7	6	14"	26'-7	36	6	7"	5'-6	2'-6
	4'	9½"	9"	12"	5'-4	12"	10'-9	76	6	14"	26'-4	6'-1	3'-8	6½"	4'-2	6	14"	26'-7	6	14"	26'-7	36	6	7"	6'-0	2'-6
	5'	9½"	9"	12"	6'-4	12"	12'-9	76	6	14"	26'-4	6'-1	3'-8	6½"	4'-2	6	14"	26'-7	6	14"	26'-7	36	6	7"	6'-6	2'-6
	6'	9½"	9"	12"	7'-4	12"	14'-9	84	6	14"	26'-4	6'-1	3'-8	6½"	4'-2	6	14"	26'-7	6	14"	26'-7	36	6	7"	7'-0	2'-6
	7'	9½"	9"	12"	8'-4	12"	16'-9	92	6	13"	26'-4	6'-1	3'-8	6½"	4'-2	6	13"	26'-7	6	13"	26'-7	36	5	6½"	7'-5	2'-6
	8'	9½"	9"	12"	9'-4	12"	18'-9	92	6	13"	26'-4	6'-1	3'-8	6½"	4'-2	6	13"	26'-7	6	13"	26'-7	36	6	6½"	8'-0	2'-6
10'	3'	10½"	11"	12"	4'-6	12"	9'-2	68	7	17"	32'-9	7'-7	4'-8	7½"	5'-2	6	17"	33'-3	7	17"	33'-3	66	6	8½"	6'-1	3'-0
	4'	10½"	11"	12"	5'-6	12"	11'-2	76	7	17"	32'-9	7'-7	4'-8	7½"	5'-2	6	17"	33'-3	7	17"	33'-3	66	6	8½"	6'-7	3'-0
	5'	10½"	11"	12"	6'-6	12"	13'-2	76	6	12"	32'-9	7'-7	4'-8	7½"	5'-2	5	12"	33'-3	6	12"	33'-3	66	5	6"	6'-8	2'-8
	6'	10½"	11"	12"	7'-6	12"	15'-2	84	6	12"	32'-9	7'-7	4'-8	7½"	5'-2	5	12"	33'-3	6	12"	33'-3	66	5	6"	7'-2	2'-8
	7'	10½"	11"	12"	8'-6	12"	17'-2	92	7	15"	32'-9	7'-7	4'-8	7½"	5'-2	5	15"	33'-3	7	15"	33'-3	66	6	7½"	7'-9	2'-8
	8'	10½"	11"	12"	9'-6	12"	19'-2	92	7	15"	32'-9	7'-7	4'-8	7½"	5'-2	5	15"	33'-3	7	15"	33'-3	66	6	7½"	8'-3	2'-8
	9'	10½"	11"	12"	10'-6	12"	21'-2	100	7	15"	32'-9	7'-7	4'-8	7½"	5'-2	6	15"	33'-3	7	15"	33'-3	66	6	7½"	8'-9	2'-8
	10'	10½"	11"	12"	11'-6	12"	23'-2	108	7	14"	32'-9	7'-7	4'-8	7½"	5'-2	5	14"	33'-3	7	14"	33'-3	66	6	7"	9'-3	2'-8
12'	8'	12½"	13"	12"	9'-10	12"	20'-0	92	7	13"	39'-4	9'-1	5'-6	9½"	6'-2	5	13"	39'-11	7	13"	39'-11	78	6	6½"	8'-7	2'-10
	9'	12½"	13"	12"	10'-10	12"	22'-0	100	8	16"	39'-4	9'-1	5'-6	9½"	6'-2	5	16"	39'-11	8	16"	39'-11	78	6	8"	9'-1	2'-10
	10'	12½"	13"	12"	11'-10	12"	24'-0	108	8	16"	39'-4	9'-1	5'-6	9½"	6'-2	5	16"	39'-11	8	16"	39'-11	78	6	8"	9'-7	2'-10
	11'	12½"	13"	12"	12'-10	12"	26'-0	108	7	12"	39'-4	9'-1	5'-6	9½"	6'-2	4	12"	39'-11	7	12"	39'-11	78	6	6"	10'-1	2'-10
	12'	12½"	13"	12"	13'-10	12"	28'-0	116	7	12"	39'-4	9'-1	5'-6	9½"	6'-2	5	12"	39'-11	7	12"	39'-11	78	6	6"	10'-8	2'-10

✦ Total number of bars in the cross-section.

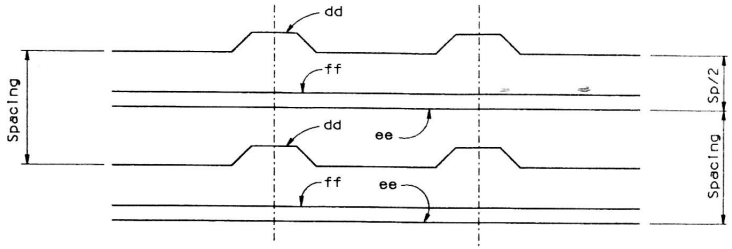

REINFORCING BAR PLACING DIAGRAM

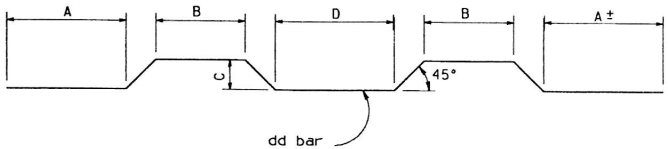

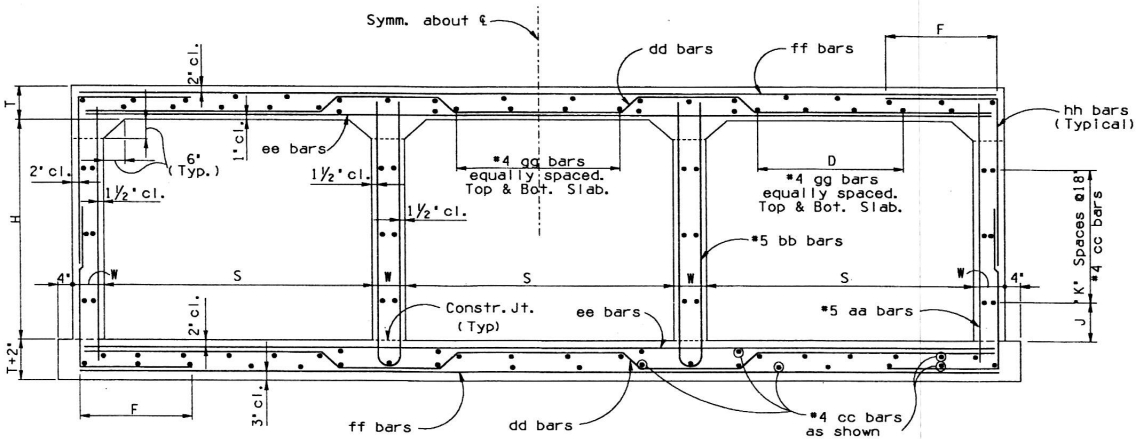

TYPICAL SECTION

Height "H"	"J" Dim.	"K" Spaces
3'	9"	1
4'	3"	2
5'	12"	2
6'	9"	3
7'	3"	4
8'	12"	4
9'	9"	5
10'	3"	6
11'	12"	6
12'	9"	7

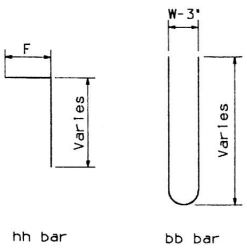

BENDS

NOTE:

See B-02.35 for Tables II thru V.
See B-01.10 for General Notes and Miscellaneous Details.
See B-02.70 for Quantities.

Registered Professional Engineer (Civil) CERTIFICATE NO. 9910 T. DANIEL DAVIS Expires 9-1-88 ARIZONA U.S.A.	DESIGN APPROVED T. D. Davis	ARIZONA DEPARTMENT OF TRANSPORTATION HIGHWAYS DIVISION STANDARD DRAWINGS	REVISION 7-88
	APPROVED FOR DISTRIBUTION T. A. Bryant, Jr.	TRIPLE BARREL BOX CULVERT	STANDARD NO. B-02.30

CADD FILENAME= 2FA
VIEW NAME=

DESIGN				NO	DESCRIPTION OF REVISIONS	MADE BY	DATE
DRAWN				1	Total Redesign of Box	C.H.	6-88
CHECKED				2			
				3			
				4			

TABLE NO. II
10'-15' FILL

Span "S"	Height "H"	Top Slab "T"	Walls "W"	aa Spacing	aa Length	bb Spacing	bb Length	cc Number ✦	dd Bar Size	dd Spacing	dd Length	A	B	C	D	ee Bar Size	ee Spacing	ee Length	ff Bar Size	ff Spacing	ff Length	gg Number ✦	hh Bar Size	hh Spacing	hh Length	F
6'	3'	8"	8"	12"	4'-1	12"	8'-3	68	5	14"	20'-0	4'-7	2'-10	5"	3'-1	5	14"	20'-3	5	14"	20'-3	24	4	7"	5'-0	2'-5
	4'	8"	8"	12"	5'-1	12"	10'-3	76	5	14"	20'-0	4'-7	2'-10	5"	3'-1	5	14"	20'-3	5	14"	20'-3	24	4	7"	5'-6	2'-5
	5'	8"	8"	12"	6'-1	12"	12'-3	76	5	14"	20'-0	4'-7	2'-10	5"	3'-1	5	14"	20'-3	5	14"	20'-3	24	4	7"	6'-0	2'-5
	6'	8"	8"	12"	7'-1	12"	14'-3	84	5	14"	20'-0	4'-7	2'-10	5"	3'-1	5	14"	20'-3	5	14"	20'-3	24	4	7"	6'-6	2'-5
	7'	8"	8"	12"	8'-1	12"	16'-3	92	5	14"	20'-0	4'-7	2'-10	5"	3'-1	5	14"	20'-3	5	14"	20'-3	24	4	7"	7'-0	2'-5
8'	3'	10½"	9"	12"	4'-6	12"	9'-2	68	6	13"	26'-6	6'-1	3'-6	7½"	4'-2	5	13"	26'-7	6	13"	26'-7	30	4	6½"	5'-3	2'-6
	4'	10½"	9"	12"	5'-6	12"	11'-2	76	6	13"	26'-6	6'-1	3'-6	7½"	4'-2	4	13"	26'-7	6	13"	26'-7	30	4	6½"	5'-9	2'-6
	5'	10½"	9"	12"	6'-6	12"	13'-2	76	6	13"	26'-6	6'-1	3'-6	7½"	4'-2	4	13"	26'-7	6	13"	26'-7	30	4	6½"	6'-3	2'-6
	6'	10½"	9"	12"	7'-6	12"	15'-2	84	6	13"	26'-6	6'-1	3'-6	7½"	4'-2	4	13"	26'-7	6	13"	26'-7	30	4	6½"	6'-9	2'-6
	7'	10½"	9"	12"	8'-6	12"	17'-2	92	6	13"	26'-6	6'-1	3'-6	7½"	4'-2	4	13"	26'-7	6	13"	26'-7	30	4	6½"	7'-3	2'-6
	8'	10½"	9"	12"	9'-6	12"	19'-2	92	6	12"	26'-6	6'-1	3'-6	7½"	4'-2	4	12"	26'-7	6	12"	26'-7	30	4	6"	7'-9	2'-6
10'	3'	12½"	11"	12"	4'-10	12"	9'-8	68	7	14"	33'-1	7'-7	4'-4	9½"	5'-2	4	14"	33'-3	7	14"	33'-3	36	5	7"	5'-10	2'-8
	4'	12½"	11"	12"	5'-10	12"	11'-8	76	7	13"	33'-1	7'-7	4'-4	9½"	5'-2	4	13"	33'-3	7	13"	33'-3	36	4	6½"	6'-1	2'-8
	5'	12½"	11"	12"	6'-10	12"	13'-8	76	7	14"	33'-1	7'-7	4'-4	9½"	5'-2	4	14"	33'-3	7	14"	33'-3	36	5	7"	6'-10	2'-8
	6'	12½"	11"	12"	7'-10	12"	15'-8	84	7	13"	33'-1	7'-7	4'-4	9½"	5'-2	4	13"	33'-3	7	13"	33'-3	36	5	6½"	7'-4	2'-8
	7'	12½"	11"	12"	8'-10	12"	17'-8	92	7	13"	33'-1	7'-7	4'-4	9½"	5'-2	4	13"	33'-3	7	13"	33'-3	36	5	6½"	7'-10	2'-8
	8'	12½"	11"	12"	9'-10	12"	19'-8	92	7	13"	33'-1	7'-7	4'-4	9½"	5'-2	4	13"	33'-3	7	13"	33'-3	36	5	6½"	8'-4	2'-8
	9'	12½"	11"	12"	10'-10	12"	21'-8	100	7	13"	33'-1	7'-7	4'-4	9½"	5'-2	4	13"	33'-3	7	13"	33'-3	36	5	6½"	8'-10	2'-8
	10'	12½"	11"	12"	11'-10	12"	23'-8	108	7	13"	33'-1	7'-7	4'-4	9½"	5'-2	4	13"	33'-3	7	13"	33'-3	36	5	6½"	9'-4	2'-8
12'	8'	15"	13"	12"	10'-3	12"	20'-6	92	8	15"	39'-8	9'-1	5'-1	12"	6'-2	4	15"	39'-11	8	15"	39'-11	42	6	7½"	8'-8	2'-11
	9'	15"	13"	12"	11'-3	12"	22'-6	100	8	15"	39'-8	9'-1	5'-1	12"	6'-2	4	15"	39'-11	8	15"	39'-11	42	6	7½"	9'-2	2'-11
	10'	15"	13"	12"	12'-3	12"	24'-6	108	8	15"	39'-8	9'-1	5'-1	12"	6'-2	5	15"	39'-11	8	15"	39'-11	42	6	7½"	9'-8	2'-11
	11'	15"	13"	12"	13'-3	12"	26'-6	108	8	14"	39'-8	9'-1	5'-1	12"	6'-2	4	14"	39'-11	8	14"	39'-11	42	5	7"	10'-8	3'-5
	12'	15"	13"	12"	14'-3	12"	28'-6	116	8	14"	39'-8	9'-1	5'-1	12"	6'-2	5	14"	39'-11	8	14"	39'-11	42	6	7"	11'-2	3'-5

TABLE NO. III
15'-20' FILL

Span "S"	Height "H"	Top Slab "T"	Walls "W"	aa Spacing	aa Length	bb Spacing	bb Length	cc Number ✦	dd Bar Size	dd Spacing	dd Length	A	B	C	D	ee Bar Size	ee Spacing	ee Length	ff Bar Size	ff Spacing	ff Length	gg Number ✦	hh Bar Size	hh Spacing	hh Length	F
6'	3'	9½"	8"	12"	4'-4	12"	8'-9	68	5	13"	20'-2	4'-7	2'-7	6½"	3'-1	5	13"	20'-3	5	13"	20'-3	24	4	6½"	5'-1	2'-5
	4'	9½"	8"	12"	5'-4	12"	10'-9	76	5	13"	20'-2	4'-7	2'-7	6½"	3'-1	5	13"	20'-3	5	13"	20'-3	24	4	6½"	5'-7	2'-5
	5'	9½"	8"	12"	6'-4	12"	12'-9	76	5	13"	20'-2	4'-7	2'-7	6½"	3'-1	5	13"	20'-3	5	13"	20'-3	24	4	6½"	6'-1	2'-5
	6'	9½"	8"	12"	7'-4	12"	14'-9	84	5	13"	20'-2	4'-7	2'-7	6½"	3'-1	5	13"	20'-3	5	13"	20'-3	24	4	6½"	6'-7	2'-5
	7'	9½"	8"	12"	8'-4	12"	16'-9	92	5	13"	20'-2	4'-7	2'-7	6½"	3'-1	5	13"	20'-3	5	13"	20'-3	24	4	6½"	7'-1	2'-5
8'	3'	12"	9"	12"	4'-9	12"	9'-8	68	6	12"	26'-9	6'-1	3'-3	9"	4'-2	4	12"	26'-7	6	12"	26'-7	30	4	6"	5'-5	2'-6
	4'	12"	9"	12"	5'-9	12"	11'-8	76	6	12"	26'-9	6'-1	3'-3	9"	4'-2	4	12"	26'-7	6	12"	26'-7	30	4	6"	5'-11	2'-6
	5'	12"	9"	12"	6'-9	12"	13'-8	76	6	12"	26'-9	6'-1	3'-3	9"	4'-2	4	12"	26'-7	6	12"	26'-7	30	4	6"	6'-5	2'-6
	6'	12"	9"	12"	7'-9	12"	15'-8	84	6	12"	26'-9	6'-1	3'-3	9"	4'-2	4	12"	26'-7	6	12"	26'-7	30	4	6"	6'-11	2'-6
	7'	12"	9"	12"	8'-9	12"	17'-8	92	6	12"	26'-9	6'-1	3'-3	9"	4'-2	4	12"	26'-7	6	12"	26'-7	30	4	6"	7'-5	2'-6
	8'	12"	9"	12"	9'-9	12"	19'-8	92	6	12"	26'-9	6'-1	3'-3	9"	4'-2	4	12"	26'-7	6	12"	26'-7	30	4	6"	7'-11	2'-6
10'	3'	15"	11"	12"	5'-3	12"	10'-8	68	7	13"	33'-5	7'-7	3'-11	1'-0	5'-2	4	13"	33'-3	7	13"	33'-3	36	5	6½"	6'-0	2'-8
	4'	15"	11"	12"	6'-3	12"	12'-8	76	7	13"	33'-5	7'-7	3'-11	1'-0	5'-2	4	13"	33'-3	7	13"	33'-3	36	5	6½"	6'-6	2'-8
	5'	15"	11"	12"	7'-3	12"	14'-8	76	7	13"	33'-5	7'-7	3'-11	1'-0	5'-2	4	13"	33'-3	7	13"	33'-3	36	5	6½"	7'-0	2'-8
	6'	15"	11"	12"	8'-3	12"	16'-8	84	7	13"	33'-5	7'-7	3'-11	1'-0	5'-2	4	13"	33'-3	7	13"	33'-3	36	5	6½"	7'-6	2'-8
	7'	15"	11"	12"	9'-3	12"	18'-8	92	7	13"	33'-5	7'-7	3'-11	1'-0	5'-2	4	13"	33'-3	7	13"	33'-3	36	5	6½"	8'-0	2'-8
	8'	15"	11"	12"	10'-3	12"	20'-8	92	7	13"	33'-5	7'-7	3'-11	1'-0	5'-2	4	13"	33'-3	7	13"	33'-3	36	5	6½"	8'-6	2'-8
	9'	15"	11"	12"	11'-3	12"	22'-8	100	7	13"	33'-5	7'-7	3'-11	1'-0	5'-2	4	13"	33'-3	7	13"	33'-3	36	5	6½"	9'-0	2'-8
	10'	15"	11"	12"	12'-3	12"	24'-8	108	7	13"	33'-5	7'-7	3'-11	1'-0	5'-2	4	13"	33'-3	7	13"	33'-3	36	5	6½"	9'-6	2'-9
12'	8'	18"	13"	12"	10'-9	12"	21'-6	92	8	14"	40'-1	9'-1	4'-7	1'-3	6'-2	4	14"	39'-11	8	14"	39'-11	42	5	7"	9'-6	3'-5
	9'	18"	13"	12"	11'-9	12"	23'-6	100	8	14"	40'-1	9'-1	4'-7	1'-3	6'-2	4	14"	39'-11	8	14"	39'-11	42	5	7"	10'-0	3'-5
	10'	18"	13"	12"	12'-9	12"	25'-6	108	8	14"	40'-1	9'-1	4'-7	1'-3	6'-2	4	14"	39'-11	8	14"	39'-11	42	6	7"	10'-7	3'-5
	11'	18"	13"	12"	13'-9	12"	27'-6	108	8	14"	40'-1	9'-1	4'-7	1'-3	6'-2	5	14"	39'-11	8	14"	39'-11	42	6	7"	11'-1	3'-5
	12'	18"	13"	12"	14'-9	12"	29'-6	116	8	14"	40'-1	9'-1	4'-7	1'-3	6'-2	5	14"	39'-11	8	14"	39'-11	42	6	7"	11'-7	3'-5

TABLE NO. IV
20'-25' FILL

Span "S"	Height "H"	Top Slab "T"	Walls "W"	aa Spacing	aa Length	bb Spacing	bb Length	cc Number ✦	dd Bar Size	dd Spacing	dd Length	A	B	C	D	ee Bar Size	ee Spacing	ee Length	ff Bar Size	ff Spacing	ff Length	gg Number ✦	hh Bar Size	hh Spacing	hh Length	F
6'	3'	11"	8"	12"	4'-7	12"	9'-2	68	5	12"	20'-5	4'-7	2'-4	8"	3'-1	5	12"	20'-3	5	12"	20'-3	24	4	6"	5'-3	2'-5
	4'	11"	8"	12"	5'-7	12"	11'-2	76	5	12"	20'-5	4'-7	2'-4	8"	3'-1	5	12"	20'-3	5	12"	20'-3	24	4	6"	5'-9	2'-5
	5'	11"	8"	12"	6'-7	12"	13'-2	76	5	12"	20'-5	4'-7	2'-4	8"	3'-1	5	12"	20'-3	5	12"	20'-3	24	4	6"	6'-3	2'-5
	6'	11"	8"	12"	7'-7	12"	15'-2	84	5	12"	20'-5	4'-7	2'-4	8"	3'-1	5	12"	20'-3	5	12"	20'-3	24	4	6"	6'-9	2'-5
	7'	11"	8"	12"	8'-7	12"	17'-2	92	5	12"	20'-5	4'-7	2'-4	8"	3'-1	5	12"	20'-3	5	12"	20'-3	24	4	6"	7'-3	2'-5
8'	3'	14"	9"	12"	5'-1	12"	10'-2	68	6	12"	27'-0	6'-1	2'-11	11"	4'-2	4	12"	26'-7	6	12"	26'-7	30	4	6"	5'-7	2'-6
	4'	14"	9"	12"	6'-1	12"	12'-2	76	6	12"	27'-0	6'-1	2'-11	11"	4'-2	4	12"	26'-7	6	12"	26'-7	30	4	6"	6'-1	2'-6
	5'	14"	9"	12"	7'-1	12"	14'-2	76	6	12"	27'-0	6'-1	2'-11	11"	4'-2	4	12"	26'-7	6	12"	26'-7	30	4	6"	6'-7	2'-6
	6'	14"	9"	12"	8'-1	12"	16'-2	84	6	12"	27'-0	6'-1	2'-11	11"	4'-2	4	12"	26'-7	6	12"	26'-7	30	4	6"	7'-1	2'-6
	7'	14"	9"	12"	9'-1	12"	18'-2	92	6	12"	27'-0	6'-1	2'-11	11"	4'-2	4	12"	26'-7	6	12"	26'-7	30	4	6"	7'-7	2'-6
	8'	14"	9"	12"	10'-1	12"	20'-2	92	6	12"	27'-0	6'-1	2'-11	11"	4'-2	4	12"	26'-7	6	12"	26'-7	30	4	6"	8'-1	2'-6
10'	3'	17"	11"	12"	5'-7	12"	11'-2	68	7	13"	33'-8	7'-7	3'-7	1'-2	5'-2	4	13"	33'-3	7	13"	33'-3	36	5	6½"	6'-3	2'-9
	4'	17"	11"	12"	6'-7	12"	13'-2	76	7	13"	33'-8	7'-7	3'-7	1'-2	5'-2	4	13"	33'-3	7	13"	33'-3	36	5	6½"	6'-9	2'-9
	5'	17"	11"	12"	7'-7	12"	15'-2	76	7	13"	33'-8	7'-7	3'-7	1'-2	5'-2	4	13"	33'-3	7	13"	33'-3	36	5	6½"	7'-3	2'-9
	6'	17"	11"	12"	8'-7	12"	17'-2	84	7	13"	33'-8	7'-7	3'-7	1'-2	5'-2	4	13"	33'-3	7	13"	33'-3	36	5	6½"	7'-9	2'-9
	7'	17"	11"	12"	9'-7	12"	19'-2	92	7	13"	33'-8	7'-7	3'-7	1'-2	5'-2	4	13"	33'-3	7	13"	33'-3	36	5	6½"	8'-3	2'-9
	8'	17"	11"	12"	10'-7	12"	21'-2	92	7	13"	33'-8	7'-7	3'-7	1'-2	5'-2	4	13"	33'-3	7	13"	33'-3	36	5	6½"	8'-9	2'-9
	9'	17"	11"	12"	11'-7	12"	23'-2	100	7	13"	33'-8	7'-7	3'-7	1'-2	5'-2	4	13"	33'-3	7	13"	33'-3	36	5	6½"	9'-3	2'-9
	10'	17"	11"	12"	12'-7	12"	25'-2	108	7	13"	33'-8	7'-7	3'-7	1'-2	5'-2	4	13"	33'-3	7	13"	33'-3	36	5	6½"	9'-9	2'-9
12'	8'	20½"	13"	12"	11'-2	12"	22'-6	92	8	14"	40'-5	9'-1	4'-2	1'-5½"	6'-2	5	14"	39'-11	8	14"	39'-11	42	6	7"	9'-5	2'-11
	9'	20½"	13"	12"	12'-2	12"	24'-6	100	8	14"	40'-5	9'-1	4'-2	1'-5½"	6'-2	5	14"	39'-11	8	14"	39'-11	42	6	7"	9'-10	2'-11
	10'	20½"	13"	12"	13'-2	12"	26'-6	108	8	14"	40'-5	9'-1	4'-2	1'-5½"	6'-2	5	14"	39'-11	8	14"	39'-11	42	6	7"	10'-4	2'-11
	11'	20½"	13"	12"	14'-2	12"	28'-6	108	8	14"	40'-5	9'-1	4'-2	1'-5½"	6'-2	5	14"	39'-11	8	14"	39'-11	42	6	7"	11'-4	3'-5
	12'	20½"	13"	12"	15'-2	12"	30'-6	116	8	13"	40'-5	9'-1	4'-2	1'-5½"	6'-2	5	13"	39'-11	8	13"	39'-11	42	5	6½"	11'-9	3'-5

✦Total number of bars in the cross-section.

TABLE NO. V
25'-30' FILL

Span "S"	Height "H"	Top Slab "T"	Walls "W"	aa Spacing	aa Length	bb Spacing	bb Length	cc Number ✦	dd Bar Size	dd Spacing	dd Length	A	B	C	D	ee Bar Size	ee Spacing	ee Length	ff Bar Size	ff Spacing	ff Length	gg Number ✦	hh Bar Size	hh Spacing	hh Length	F
6'	3'	12½"	8"	12"	4'-10	12"	9'-10	68	6	16"	20'-6	4'-7	2'-1	9½"	3'-1	6	16"	20'-3	6	16"	20'-3	24	4	8"	5'-4	2'-5
	4'	12½"	8"	12"	5'-10	12"	11'-10	76	6	16"	20'-6	4'-7	2'-1	9½"	3'-1	6	16"	20'-3	6	16"	20'-3	24	4	8"	5'-10	2'-5
	5'	12½"	8"	12"	6'-10	12"	13'-10	76	6	16"	20'-6	4'-7	2'-1	9½"	3'-1	6	16"	20'-3	6	16"	20'-3	24	4	8"	6'-4	2'-5
	6'	12½"	8"	12"	7'-10	12"	15'-10	84	5	12"	20'-6	4'-7	2'-1	9½"	3'-1	5	12"	20'-3	5	12"	20'-3	24	4	6"	6'-10	2'-5
	7'	12½"	8"	12"	8'-10	12"	17'-10	92	5	12"	20'-6	4'-7	2'-1	9½"	3'-1	5	12"	20'-3	5	12"	20'-3	24	4	6"	7'-4	2'-5
8'	3'	16"	9"	12"	5'-5	12"	11'-1	68	7	16"	27'-3	6'-1	2'-7	1'-1	4'-2	4	16"	26'-7	7	16"	26'-7	30	5	8"	6'-0	2'-7
	4'	16"	9"	12"	6'-5	12"	13'-1	76	7	16"	27'-3	6'-1	2'-7	1'-1	4'-2	4	16"	26'-7	7	16"	26'-7	30	5	8"	6'-6	2'-7
	5'	16"	9"	12"	7'-5	12"	15'-1	76	6	12"	27'-3	6'-1	2'-7	1'-1	4'-2	4	12"	26'-7	6	12"	26'-7	30	4	6"	6'-9	2'-6
	6'	16"	9"	12"	8'-5	12"	17'-1	84	6	12"	27'-3	6'-1	2'-7	1'-1	4'-2	4	12"	26'-7	6	12"	26'-7	30	4	6"	7'-3	2'-6
	7'	16"	9"	12"	9'-5	12"	19'-1	92	6	12"	27'-3	6'-1	2'-7	1'-1	4'-2	4	12"	26'-7	6	12"	26'-7	30	4	6"	7'-9	2'-6
	8'	16"	9"	12"	10'-5	12"	21'-1	92	6	12"	27'-3	6'-1	2'-7	1'-1	4'-2	4	12"	26'-7	6	12"	26'-7	30	4	6"	8'-3	2'-6
10'	3'	19"	11"	12"	5'-11	12"	11'-9	68	7	12"	34'-0	7'-7	3'-3	1'-4	5'-2	4	12"	33'-3	7	12"	33'-3	36	5	6"	6'-4	2'-9
	4'	19"	11"	12"	6'-11	12"	13'-9	76	7	12"	34'-0	7'-7	3'-3	1'-4	5'-2	4	12"	33'-3	7	12"	33'-3	36	5	6"	6'-10	2'-9
	5'	19"	11"	12"	7'-11	12"	15'-9	76	7	12"	34'-0	7'-7	3'-3	1'-4	5'-2	4	12"	33'-3	7	12"	33'-3	36	5	6"	7'-4	2'-9
	6'	19"	11"	12"	8'-11	12"	17'-9	84	7	12"	34'-0	7'-7	3'-3	1'-4	5'-2	4	12"	33'-3	7	12"	33'-3	36	5	6"	7'-10	2'-9
	7'	19"	11"	12"	9'-11	12"	19'-9	92	7	12"	34'-0	7'-7	3'-3	1'-4	5'-2	4	12"	33'-3	7	12"	33'-3	36	5	6"	8'-4	2'-9
	8'	19"	11"	12"	10'-11	12"	21'-9	92	7	12"	34'-0	7'-7	3'-3	1'-4	5'-2	4	12"	33'-3	7	12"	33'-3	36	5	6"	8'-10	2'-9
	9'	19"	11"	12"	11'-11	12"	23'-9	100	7	12"	34'-0	7'-7	3'-3	1'-4	5'-2	4	12"	33'-3	7	12"	33'-3	36	5	6"	9'-4	2'-9
	10'	19"	11"	9"	12'-11	12"	25'-9	108	7	12"	34'-0	7'-7	3'-3	1'-4	5'-2	4	12"	33'-3	7	12"	33'-3	36	5	6"	9'-10	2'-9
12'	8'	23"	13"	12"	11'-7	12"	23'-0	92	8	14"	40'-9	9'-1	3'-9	1'-8	6'-2	5	14"	39'-11	8	14"	39'-11	42	6	7"	10'-0	3'-5
	9'	23"	13"	12"	12'-7	12"	25'-0	100	8	14"	40'-9	9'-1	3'-9	1'-8	6'-2	5	14"	39'-11	8	14"	39'-11	42	6	7"	10'-6	3'-5
	10'	23"	13"	12"	13'-7	12"	27'-0	108	8	14"	40'-9	9'-1	3'-9	1'-8	6'-2	5	14"	39'-11	8	14"	39'-11	42	6	7"	11'-0	3'-5
	11'	23"	13"	12"	14'-7	12"	29'-0	108	8	14"	40'-9	9'-1	3'-9	1'-8	6'-2	5	14"	39'-11	8	14"	39'-11	42	6	7"	11'-6	3'-5
	12'	23"	13"	7"	15'-7	12"	31'-0	116	8	14"	40'-9	9'-1	3'-9	1'-8	6'-2	6	14"	39'-11	8	14"	39'-11	42	6	7"	12'-0	3'-5

DESIGN APPROVED	ARIZONA DEPARTMENT OF TRANSPORTATION HIGHWAYS DIVISION STANDARD DRAWINGS	REVISION
J. D. Davis		7-88
APPROVED FOR DISTRIBUTION T. A. Bryant, II.	TRIPLE BARREL BOX CULVERT	STANDARD NO. B-02.35

CADD FILENAME= ZFA
VIEW NAME=

DESIGN			NO	DESCRIPTION OF REVISIONS	MADE BY	DATE
DRAWN			1	Total Redesign of Box	J. M.	6-88
CHECKED			2			
			3			
			4			

TABLE I
0'-10' FILL

Span "S"	Height "H"	Top Slab "T"	Walls "W"	aa Spacing	aa Length	bb Spacing	bb Length	cc Number ✦	dd Bar Size	dd Spacing	dd Length	A	B	C	D	ee Bar Size	ee Spacing	ee Length	ff Bar Size	ff Spacing	ff Length	gg Number ✦	hh Bar Size	hh Spacing	hh Length	F
6'	3'	9½"	8"	12"	4'-4	12"	8'-9	88	5	14"	27'-3	4'-7	2'-7	6½"	3'-1	5	14"	14'-0	5	14"	26'-11	40	4	7"	5'-1	2'-5
	4'	9½"	8"	12"	5'-4	12"	10'-9	98	5	14"	27'-3	4'-7	2'-7	6½"	3'-1	5	14"	14'-0	5	14"	26'-11	40	4	7"	5'-7	2'-5
	5'	9½"	8"	12"	6'-4	12"	12'-9	98	5	14"	27'-3	4'-7	2'-7	6½"	3'-1	5	14"	14'-0	5	14"	26'-11	40	4	7"	6'-1	2'-5
	6'	9½"	8"	12"	7'-4	12"	14'-9	108	5	14"	27'-3	4'-7	2'-7	6½"	3'-1	5	14"	14'-0	5	14"	26'-11	40	4	7"	6'-7	2'-5
	7'	9½"	8"	12"	8'-4	12"	16'-9	118	5	13"	27'-3	4'-7	2'-7	6½"	3'-1	5	13"	14'-0	5	13"	26'-11	40	4	6½"	7'-1	2'-5
8'	3'	9½"	9"	12"	4'-4	12"	8'-9	88	6	14"	35'-7	6'-1	3'-8	6½"	4'-2	6	14"	18'-3	6	14"	35'-4	56	6	7"	5'-6	2'-6
	4'	9½"	9"	12"	5'-4	12"	10'-9	98	6	14"	35'-7	6'-1	3'-8	6½"	4'-2	6	14"	18'-3	6	14"	35'-4	56	6	7"	6'-0	2'-6
	5'	9½"	9"	12"	6'-4	12"	12'-9	98	6	14"	35'-7	6'-1	3'-8	6½"	4'-2	6	14"	18'-3	6	14"	35'-4	56	6	7"	6'-6	2'-6
	6'	9½"	9"	12"	7'-4	12"	14'-9	108	6	14"	35'-7	6'-1	3'-8	6½"	4'-2	6	14"	18'-3	6	14"	35'-4	56	6	7"	6'-11	2'-6
	7'	9½"	9"	12"	8'-4	12"	16'-9	118	6	13"	35'-7	6'-1	3'-8	6½"	4'-2	6	13"	18'-3	6	13"	35'-4	56	5	6½"	7'-5	2'-6
	8'	9½"	9"	12"	9'-4	12"	18'-9	118	6	13"	35'-7	6'-1	3'-8	6½"	4'-2	6	13"	18'-3	6	13"	35'-4	56	6	6½"	8'-0	2'-6
10'	3'	10½"	11"	12"	4'-6	12"	9'-2	88	7	17"	44'-2	7'-7	4'-8	7½"	5'-2	6	17"	22'-8	7	17"	44'-2	64	6	8½"	6'-1	3'-0
	4'	10½"	11"	12"	5'-6	12"	11'-2	98	7	17"	44'-2	7'-7	4'-8	7½"	5'-2	6	17"	22'-8	7	17"	44'-2	64	6	8½"	6'-7	3'-0
	5'	10½"	11"	12"	6'-6	12"	13'-2	98	6	12"	44'-2	7'-7	4'-8	7½"	5'-2	5	12"	22'-8	6	12"	44'-2	64	5	6"	6'-8	2'-8
	6'	10½"	11"	12"	7'-6	12"	15'-2	108	6	12"	44'-2	7'-7	4'-8	7½"	5'-2	5	12"	22'-8	6	12"	44'-2	64	5	6"	7'-2	2'-8
	7'	10½"	11"	12"	8'-6	12"	17'-2	118	7	15"	44'-2	7'-7	4'-8	7½"	5'-2	5	15"	22'-8	7	15"	44'-2	64	6	7½"	7'-9	2'-8
	8'	10½"	11"	12"	9'-6	12"	19'-2	118	7	15"	44'-2	7'-7	4'-8	7½"	5'-2	5	15"	22'-8	7	15"	44'-2	64	6	7½"	8'-3	2'-8
	9'	10½"	11"	12"	10'-6	12"	21'-2	128	7	15"	44'-2	7'-7	4'-8	7½"	5'-2	6	15"	22'-8	7	15"	44'-2	64	6	7½"	8'-9	2'-8
	10'	10½"	11"	12"	11'-6	12"	23'-2	138	7	14"	44'-2	7'-7	4'-8	7½"	5'-2	5	14"	22'-8	7	14"	44'-2	64	6	7"	9'-3	2'-8
12'	8'	12½"	13"	12"	9'-10	12"	20'-0	118	7	13"	53'-0	9'-1	5'-6	9½"	6'-2	5	13"	27'-0	7	13"	53'-0	88	6	6½"	8'-7	2'-10
	9'	12½"	13"	12"	10'-10	12"	22'-0	128	8	16"	53'-0	9'-1	5'-6	9½"	6'-2	5	16"	27'-0	8	16"	53'-0	88	6	8"	9'-1	2'-10
	10'	12½"	13"	12"	11'-10	12"	24'-0	138	8	16"	53'-0	9'-1	5'-6	9½"	6'-2	5	16"	27'-0	8	16"	53'-0	88	6	8"	9'-7	2'-10
	11'	12½"	13"	12"	12'-10	12"	26'-0	138	7	12"	53'-0	9'-1	5'-6	9½"	6'-2	4	12"	27'-0	7	12"	53'-0	88	6	6"	10'-1	2'-10
	12'	12½"	13"	12"	13'-10	12"	28'-0	148	7	12"	53'-0	9'-1	5'-6	9½"	6'-2	5	12"	27'-0	7	12"	53'-0	88	6	6"	10'-7	2'-10

✦ Total number of bars in the cross-section.

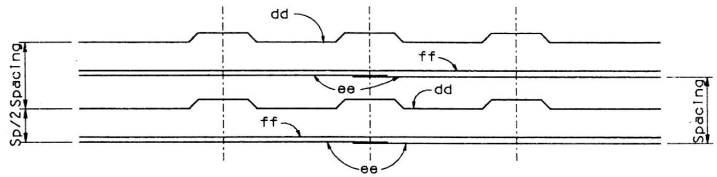

REINFORCING BAR PLACING DIAGRAM

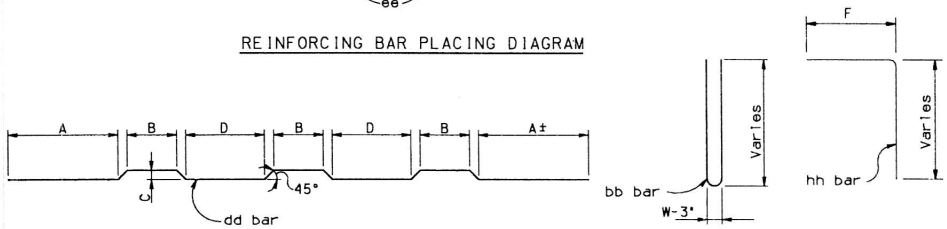

BENDS

Height "H"	"J" Dim.	"K" Spaces
3'	9"	1
4'	3"	2
5'	12"	2
6'	9"	3
7'	3"	4
8'	12"	4
9'	9"	5
10'	3"	6
11	12"	6
12'	9"	7

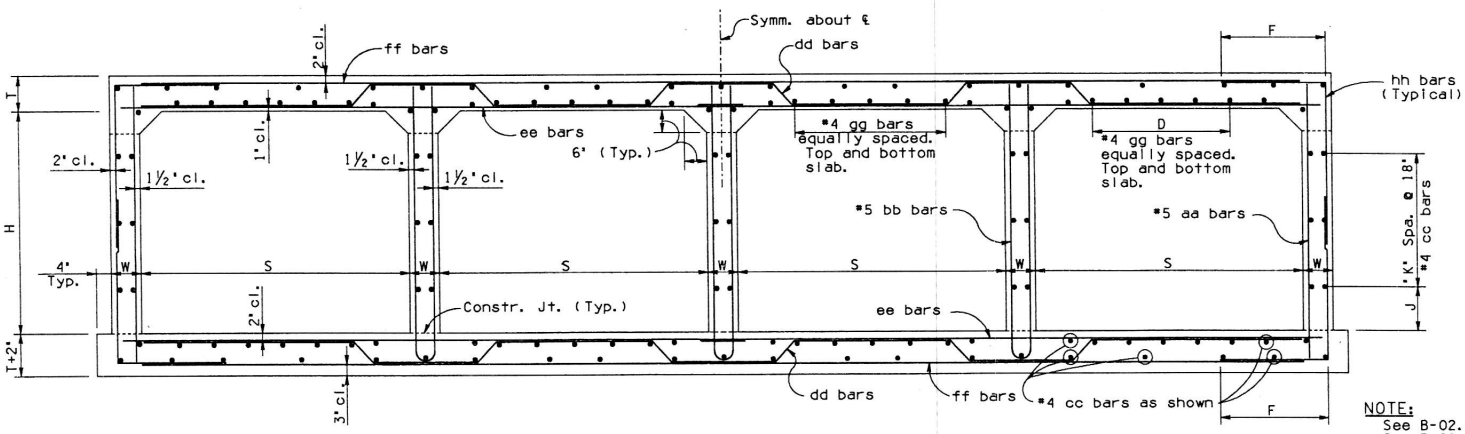

TYPICAL SECTION

NOTE:
See B-02.45 for Tables II thru V.
See B-01.10 for General Notes and Miscellaneous Details.
See B-02.70 for Quantities.

	DESIGN APPROVED J. D. Davis	ARIZONA DEPARTMENT OF TRANSPORTATION HIGHWAYS DIVISION STANDARD DRAWINGS	REVISION 7-88
	APPROVED FOR DISTRIBUTION T. A. Bryant, II.	FOUR BARREL BOX CULVERT	STANDARD NO. B-02.40

CADD FILENAME: ZFA
VIEW NAME:

DESIGN			NO	DESCRIPTION OF REVISIONS	MADE BY	DATE
DRAWN			1	Total Redesign of Box	J.K.	6-88
CHECKED			2			
			3			
			4			

TABLE II
10'-15' FILL

Span "S"	Height "H"	Top Slab "T"	Walls "W"	aa Spacing	aa Length	bb Spacing	bb Length	cc Number ✦	dd Bar Size	dd Spacing	dd Length	dd A	dd B	dd C	dd D	ee Bar Size	ee Spacing	ee Length	ff Bar Size	ff Spacing	ff Length	gg Number ✦	hh Bar Size	hh Spacing	hh Length	hh F
6'	3'	8"	8"	12"	4'-1	12"	8'-0	88	5	14"	26'-11	4'-7	2'-10	5"	3'-1	5	14"	14'-0	5	14"	26'-11	32	4	7"	5'-0	2'-5
	4'	8"	8"	12"	5'-1	12"	10'-0	98	5	14"	26'-11	4'-7	2'-10	5"	3'-1	5	14"	14'-0	5	14"	26'-11	32	4	7"	5'-6	2'-5
	5'	8"	8"	12"	6'-1	12"	12'-0	98	5	14"	26'-11	4'-7	2'-10	5"	3'-1	5	14"	14'-0	5	14"	26'-11	32	4	7"	6'-0	2'-5
	6'	8"	8"	12"	7'-1	12"	14'-0	108	5	14"	26'-11	4'-7	2'-10	5"	3'-1	5	14"	14'-0	5	14"	26'-11	32	4	7"	6'-6	2'-5
	7'	8"	8"	12"	8'-1	12"	16'-0	118	5	14"	26'-11	4'-7	2'-10	5"	3'-1	5	14"	14'-0	5	14"	26'-11	32	4	7"	7'-0	2'-5
8'	3'	10½"	9"	12"	4'-6	12"	9'-2	88	6	13"	35'-9	6'-1	3'-6	7½"	4'-2	5	13"	18'-3	6	13"	35'-4	40	4	6½"	5'-3	2'-6
	4'	10½"	9"	12"	5'-6	12"	11'-2	98	6	13"	35'-9	6'-1	3'-6	7½"	4'-2	4	13"	18'-3	6	13"	35'-4	40	4	6½"	5'-9	2'-6
	5'	10½"	9"	12"	6'-6	12"	13'-2	98	6	13"	35'-9	6'-1	3'-6	7½"	4'-2	4	13"	18'-3	6	13"	35'-4	40	4	6½"	6'-3	2'-6
	6'	10½"	9"	12"	7'-6	12"	15'-2	108	6	13"	35'-9	6'-1	3'-6	7½"	4'-2	4	13"	18'-3	6	13"	35'-4	40	4	6½"	6'-9	2'-6
	7'	10½"	9"	12"	8'-6	12"	17'-2	118	6	13"	35'-9	6'-1	3'-6	7½"	4'-2	4	13"	18'-3	6	13"	35'-4	40	4	6½"	7'-3	2'-6
	8'	10½"	9"	12"	9'-6	12"	19'-2	118	6	12"	35'-9	6'-1	3'-6	7½"	4'-2	4	12"	18'-3	6	12"	35'-4	40	4	6"	7'-9	2'-6
10'	3'	12½"	11"	12"	4'-10	12"	9'-8	88	7	14"	44'-7	7'-7	4'-4	9½"	5'-2	4	14"	22'-8	7	14"	44'-2	48	5	7"	5'-10	2'-8
	4'	12½"	11"	12"	5'-10	12"	11'-8	98	7	13"	44'-7	7'-7	4'-4	9½"	5'-2	4	13"	22'-8	7	13"	44'-2	48	4	6½"	6'-1	2'-8
	5'	12½"	11"	12"	6'-10	12"	13'-8	98	7	14"	44'-7	7'-7	4'-4	9½"	5'-2	4	14"	22'-8	7	14"	44'-2	48	5	7"	6'-10	2'-8
	6'	12½"	11"	12"	7'-10	12"	15'-8	108	7	13"	44'-7	7'-7	4'-4	9½"	5'-2	4	13"	22'-8	7	13"	44'-2	48	5	6½"	7'-4	2'-8
	7'	12½"	11"	12"	8'-10	12"	17'-8	118	7	13"	44'-7	7'-7	4'-4	9½"	5'-2	4	13"	22'-8	7	13"	44'-2	48	5	6½"	7'-10	2'-8
	8'	12½"	11"	12"	9'-10	12"	19'-8	118	7	13"	44'-7	7'-7	4'-4	9½"	5'-2	4	13"	22'-8	7	13"	44'-2	48	5	6½"	8'-4	2'-8
	9'	12½"	11"	12"	10'-10	12"	21'-8	128	7	13"	44'-7	7'-7	4'-4	9½"	5'-2	4	13"	22'-8	7	13"	44'-2	48	5	6½"	8'-10	2'-8
	10'	12½"	11"	12"	11'-10	12"	23'-8	138	7	13"	44'-7	7'-7	4'-4	9½"	5'-2	4	13"	22'-8	7	13"	44'-2	48	5	6½"	9'-4	2'-8
12'	8'	15"	13"	12"	10'-3	12"	20'-6	118	8	15"	53'-6	9'-1	5'-1	12"	6'-2	4	15"	27'-0	8	15"	53'-0	56	6	7½"	8'-10	2'-11
	9'	15"	13"	12"	11'-3	12"	22'-6	128	8	15"	53'-6	9'-1	5'-1	12"	6'-2	4	15"	27'-0	8	15"	53'-0	56	6	7½"	9'-4	2'-11
	10'	15"	13"	12"	12'-3	12"	24'-6	138	8	15"	53'-6	9'-1	5'-1	12"	6'-2	5	15"	27'-0	8	15"	53'-0	56	6	7½"	9'-10	2'-11
	11'	15"	13"	12"	13'-3	12"	26'-6	138	8	14"	53'-6	9'-1	5'-1	12"	6'-2	4	14"	27'-0	8	14"	53'-0	56	5	7"	10'-9	3'-5
	12'	15"	13"	12"	14'-3	12"	28'-6	148	8	14"	53'-6	9'-1	5'-1	12"	6'-2	5	14"	27'-0	8	14"	53'-0	56	6	7"	11'-2	3'-5

TABLE III
15'-20' FILL

Span "S"	Height "H"	Top Slab "T"	Walls "W"	aa Spacing	aa Length	bb Spacing	bb Length	cc Number ✦	dd Bar Size	dd Spacing	dd Length	dd A	dd B	dd C	dd D	ee Bar Size	ee Spacing	ee Length	ff Bar Size	ff Spacing	ff Length	gg Number ✦	hh Bar Size	hh Spacing	hh Length	hh F
6'	3'	9½"	8"	12"	4'-4	12"	8'-9	88	5	13"	27'-3	4'-7	2'-7	6½"	3'-1	5	13"	14'-0	5	13"	26'-11	32	4	6½"	5'-1	2'-5
	4'	9½"	8"	12"	5'-4	12"	10'-9	98	5	13"	27'-3	4'-7	2'-7	6½"	3'-1	5	13"	14'-0	5	13"	26'-11	32	4	6½"	5'-7	2'-5
	5'	9½"	8"	12"	6'-4	12"	12'-9	98	5	13"	27'-3	4'-7	2'-7	6½"	3'-1	5	13"	14'-0	5	13"	26'-11	32	4	6½"	6'-1	2'-5
	6'	9½"	8"	12"	7'-4	12"	14'-9	108	5	13"	27'-3	4'-7	2'-7	6½"	3'-1	5	13"	14'-0	5	13"	26'-11	32	4	6½"	6'-7	2'-5
	7'	9½"	8"	12"	8'-4	12"	16'-9	118	5	13"	27'-3	4'-7	2'-7	6½"	3'-1	5	13"	14'-0	5	13"	26'-11	32	4	6½"	7'-1	2'-5
8'	3'	12"	9"	12"	4'-9	12"	9'-8	88	6	12"	36'-1	6'-1	3'-3	9"	4'-2	4	12"	18'-3	6	12"	35'-4	40	4	6"	5'-5	2'-6
	4'	12"	9"	12"	5'-9	12"	11'-8	98	6	12"	36'-1	6'-1	3'-3	9"	4'-2	4	12"	18'-3	6	12"	35'-4	40	4	6"	5'-11	2'-6
	5'	12"	9"	12"	6'-9	12"	13'-8	98	6	12"	36'-1	6'-1	3'-3	9"	4'-2	4	12"	18'-3	6	12"	35'-4	40	4	6"	6'-5	2'-6
	6'	12"	9"	12"	7'-9	12"	15'-8	108	6	12"	36'-1	6'-1	3'-3	9"	4'-2	4	12"	18'-3	6	12"	35'-4	40	4	6"	6'-11	2'-6
	7'	12"	9"	12"	8'-9	12"	17'-8	118	6	12"	36'-1	6'-1	3'-3	9"	4'-2	4	12"	18'-3	6	12"	35'-4	40	4	6"	7'-5	2'-6
	8'	12"	9"	12"	9'-9	12"	19'-8	118	6	12"	36'-1	6'-1	3'-3	9"	4'-2	4	12"	18'-3	6	12"	35'-4	40	4	6"	7'-11	2'-6
10'	3'	15"	11"	12"	5'-3	12"	10'-8	88	7	13"	45'-1	7'-7	3'-11	1'-0	5'-2	4	13"	22'-8	7	13"	44'-2	48	5	6½"	6'-0	2'-8
	4'	15"	11"	12"	6'-3	12"	12'-8	98	7	13"	45'-1	7'-7	3'-11	1'-0	5'-2	4	13"	22'-8	7	13"	44'-2	48	5	6½"	6'-6	2'-8
	5'	15"	11"	12"	7'-3	12"	14'-8	98	7	13"	45'-1	7'-7	3'-11	1'-0	5'-2	4	13"	22'-8	7	13"	44'-2	48	5	6½"	7'-0	2'-8
	6'	15"	11"	12"	8'-3	12"	16'-8	108	7	13"	45'-1	7'-7	3'-11	1'-0	5'-2	4	13"	22'-8	7	13"	44'-2	48	5	6½"	7'-6	2'-8
	7'	15"	11"	12"	9'-3	12"	18'-8	118	7	13"	45'-1	7'-7	3'-11	1'-0	5'-2	4	13"	22'-8	7	13"	44'-2	48	5	6½"	8'-0	2'-8
	8'	15"	11"	12"	10'-3	12"	20'-8	118	7	13"	45'-1	7'-7	3'-11	1'-0	5'-2	4	13"	22'-8	7	13"	44'-2	48	5	6½"	8'-6	2'-8
	9'	15"	11"	12"	11'-3	12"	22'-8	128	7	13"	45'-1	7'-7	3'-11	1'-0	5'-2	4	13"	22'-8	7	13"	44'-2	48	5	6½"	9'-0	2'-8
	10'	15"	11"	12"	12'-3	12"	24'-8	138	7	13"	45'-1	7'-7	3'-11	1'-0	5'-2	4	13"	22'-8	7	13"	44'-2	48	5	6½"	9'-7	2'-9
12'	8'	18"	13"	12"	10'-9	12"	21'-6	118	8	14"	54'-2	9'-1	4'-7	1'-3	6'-2	4	14"	27'-0	8	14"	53'-0	56	5	7"	9'-6	3'-5
	9'	18"	13"	12"	11'-9	12"	23'-6	128	8	14"	54'-2	9'-1	4'-7	1'-3	6'-2	4	14"	27'-0	8	14"	53'-0	56	5	7"	10'-0	3'-5
	10'	18"	13"	12"	12'-9	12"	25'-6	138	8	14"	54'-2	9'-1	4'-7	1'-3	6'-2	4	14"	27'-0	8	14"	53'-0	56	6	7"	10'-6	3'-5
	11'	18"	13"	12"	13'-9	12"	27'-6	138	8	14"	54'-2	9'-1	4'-7	1'-3	6'-2	5	14"	27'-0	8	14"	53'-0	56	6	7"	11'-0	3'-5
	12'	18"	13"	12"	14'-9	12"	29'-6	148	8	14"	54'-2	9'-1	4'-7	1'-3	6'-2	5	14"	27'-0	8	14"	53'-0	56	6	7"	11'-6	3'-5

TABLE IV
20'-25' FILL

Span "S"	Height "H"	Top Slab "T"	Walls "W"	aa Spacing	aa Length	bb Spacing	bb Length	cc Number ✦	dd Bar Size	dd Spacing	dd Length	dd A	dd B	dd C	dd D	ee Bar Size	ee Spacing	ee Length	ff Bar Size	ff Spacing	ff Length	gg Number ✦	hh Bar Size	hh Spacing	hh Length	hh F
6'	3'	11"	8"	12"	4'-7	12"	9'-2	88	5	12"	27'-7	4'-7	2'-4	8"	3'-1	5	12"	14'-0	5	12"	26'-11	32	4	6"	5'-3	2'-5
	4'	11"	8"	12"	5'-7	12"	11'-2	98	5	12"	27'-7	4'-7	2'-4	8"	3'-1	5	12"	14'-0	5	12"	26'-11	32	4	6"	5'-9	2'-5
	5'	11"	8"	12"	6'-7	12"	13'-2	98	5	12"	27'-7	4'-7	2'-4	8"	3'-1	5	12"	14'-0	5	12"	26'-11	32	4	6"	6'-3	2'-5
	6'	11"	8"	12"	7'-7	12"	15'-2	108	5	12"	27'-7	4'-7	2'-4	8"	3'-1	5	12"	14'-0	5	12"	26'-11	32	4	6"	6'-9	2'-5
	7'	11"	8"	12"	8'-7	12"	17'-2	118	5	12"	27'-7	4'-7	2'-4	8"	3'-1	5	12"	14'-0	5	12"	26'-11	32	4	6"	7'-3	2'-5
8'	3'	14"	9"	12"	5'-1	12"	10'-2	88	6	12"	36'-6	6'-1	2'-11	11"	4'-2	4	12"	18'-3	6	12"	35'-4	40	4	6"	5'-7	2'-6
	4'	14"	9"	12"	6'-1	12"	12'-2	98	6	12"	36'-6	6'-1	2'-11	11"	4'-2	4	12"	18'-3	6	12"	35'-4	40	4	6"	6'-1	2'-6
	5'	14"	9"	12"	7'-1	12"	14'-2	98	6	12"	36'-6	6'-1	2'-11	11"	4'-2	4	12"	18'-3	6	12"	35'-4	40	4	6"	6'-7	2'-6
	6'	14"	9"	12"	8'-1	12"	16'-2	108	6	12"	36'-6	6'-1	2'-11	11"	4'-2	4	12"	18'-3	6	12"	35'-4	40	4	6"	7'-1	2'-6
	7'	14"	9"	12"	9'-1	12"	18'-2	118	6	12"	36'-6	6'-1	2'-11	11"	4'-2	4	12"	18'-3	6	12"	35'-4	40	4	6"	7'-7	2'-6
	8'	14"	9"	12"	10'-1	12"	20'-2	118	6	12"	36'-6	6'-1	2'-11	11"	4'-2	4	12"	18'-3	6	12"	35'-4	40	4	6"	8'-1	2'-6
10'	3'	17"	11"	12"	5'-7	12"	11'-2	88	7	13"	45'-6	7'-7	3'-7	1'-2	5'-2	4	13"	22'-8	7	13"	44'-2	48	5	6½"	6'-3	2'-9
	4'	17"	11"	12"	6'-7	12"	13'-2	98	7	13"	45'-6	7'-7	3'-7	1'-2	5'-2	4	13"	22'-8	7	13"	44'-2	48	5	6½"	6'-9	2'-9
	5'	17"	11"	12"	7'-7	12"	15'-2	98	7	13"	45'-6	7'-7	3'-7	1'-2	5'-2	4	13"	22'-8	7	13"	44'-2	48	5	6½"	7'-3	2'-9
	6'	17"	11"	12"	8'-7	12"	17'-2	108	7	13"	45'-6	7'-7	3'-7	1'-2	5'-2	4	13"	22'-8	7	13"	44'-2	48	5	6½"	7'-9	2'-9
	7'	17"	11"	12"	9'-7	12"	19'-2	118	7	13"	45'-6	7'-7	3'-7	1'-2	5'-2	4	13"	22'-8	7	13"	44'-2	48	5	6½"	8'-3	2'-9
	8'	17"	11"	12"	10'-7	12"	21'-2	118	7	13"	45'-6	7'-7	3'-7	1'-2	5'-2	4	13"	22'-8	7	13"	44'-2	48	5	6½"	8'-9	2'-9
	9'	17"	11"	12"	11'-7	12"	23'-2	128	7	13"	45'-6	7'-7	3'-7	1'-2	5'-2	4	13"	22'-8	7	13"	44'-2	48	5	6½"	9'-3	2'-9
	10'	17"	11"	12"	12'-7	12"	25'-2	138	7	13"	45'-6	7'-7	3'-7	1'-2	5'-2	4	13"	22'-8	7	13"	44'-2	48	5	6½"	9'-9	2'-9
12'	8'	20½"	13"	12"	11'-2	12"	22'-6	118	8	14"	54'-8	9'-1	4'-2	1'-5½	6'-2	5	14"	27'-0	8	14"	53'-0	56	6	7"	9'-4	2'-11
	9'	20½"	13"	12"	12'-2	12"	24'-6	128	8	14"	54'-8	9'-1	4'-2	1'-5½	6'-2	5	14"	27'-0	8	14"	53'-0	56	6	7"	9'-10	2'-11
	10'	20½"	13"	12"	13'-2	12"	26'-6	138	8	14"	54'-8	9'-1	4'-2	1'-5½	6'-2	5	14"	27'-0	8	14"	53'-0	56	6	7"	10'-4	2'-11
	11'	20½"	13"	12"	14'-2	12"	28'-6	138	8	14"	54'-8	9'-1	4'-2	1'-5½	6'-2	5	14"	27'-0	8	14"	53'-0	56	6	7"	11'-4	3'-5
	12'	20½"	13"	12"	15'-2	12"	30'-6	148	8	13"	54'-8	9'-1	4'-2	1'-5½	6'-2	5	13"	27'-0	8	13"	53'-0	56	5	6½"	11'-9	3'-5

✦ Total number of bars in the cross-section.

TABLE V
25'-30' FILL

Span "S"	Height "H"	Top Slab "T"	Walls "W"	aa Spacing	aa Length	bb Spacing	bb Length	cc Number ✦	dd Bar Size	dd Spacing	dd Length	dd A	dd B	dd C	dd D	ee Bar Size	ee Spacing	ee Length	ff Bar Size	ff Spacing	ff Length	gg Number ✦	hh Bar Size	hh Spacing	hh Length	hh F
6'	3'	12½"	8"	12"	4'-8	12"	9'-10	88	6	16"	27'-9	4'-7	2'-1	9½"	3'-1	6	16"	14'-0	6	16"	26'-11	32	4	8"	5'-4	2'-5
	4'	12½"	8"	12"	5'-8	12"	11'-10	98	6	16"	27'-9	4'-7	2'-1	9½"	3'-1	6	16"	14'-0	6	16"	26'-11	32	4	8"	5'-10	2'-5
	5'	12½"	8"	12"	6'-8	12"	13'-10	98	6	16"	27'-9	4'-7	2'-1	9½"	3'-1	6	16"	14'-0	6	16"	26'-11	32	4	8"	6'-4	2'-5
	6'	12½"	8"	12"	7'-8	12"	15'-10	108	5	12"	27'-9	4'-7	2'-1	9½"	3'-1	5	12"	14'-0	5	12"	26'-11	32	4	6"	6'-10	2'-5
	7'	12½"	8"	12"	8'-8	12"	17'-10	118	5	12"	27'-9	4'-7	2'-1	9½"	3'-1	5	12"	14'-0	5	12"	26'-11	32	4	6"	7'-4	2'-5
8'	3'	16"	9"	12"	5'-5	12"	11'-1	88	7	16"	36'-10	6'-1	2'-7	1'-1	4'-2	4	16"	18'-3	7	16"	35'-4	40	5	8"	6'-0	2'-7
	4'	16"	9"	12"	6'-5	12"	13'-1	98	7	16"	36'-10	6'-1	2'-7	1'-1	4'-2	4	16"	18'-3	7	16"	35'-4	40	5	8"	6'-6	2'-7
	5'	16"	9"	12"	7'-5	12"	15'-1	98	6	12"	36'-10	6'-1	2'-7	1'-1	4'-2	4	12"	18'-3	6	12"	35'-4	40	4	6"	6'-9	2'-6
	6'	16"	9"	12"	8'-5	12"	17'-1	108	6	12"	36'-10	6'-1	2'-7	1'-1	4'-2	4	12"	18'-3	6	12"	35'-4	40	4	6"	7'-3	2'-6
	7'	16"	9"	12"	9'-5	12"	19'-1	118	6	12"	36'-10	6'-1	2'-7	1'-1	4'-2	4	12"	18'-3	6	12"	35'-4	40	4	6"	7'-9	2'-6
	8'	16"	9"	12"	10'-5	12"	21'-1	118	6	12"	36'-10	6'-1	2'-7	1'-1	4'-2	4	12"	18'-3	6	12"	35'-4	40	4	6"	8'-3	2'-6
10'	3'	19"	11"	12"	5'-11	12"	11'-9	88	7	12"	45'-11	7'-7	3'-3	1'-4	5'-2	4	12"	22'-8	7	12"	44'-2	48	5	6"	6'-4	2'-9
	4'	19"	11"	12"	6'-11	12"	13'-9	98	7	12"	45'-11	7'-7	3'-3	1'-4	5'-2	4	12"	22'-8	7	12"	44'-2	48	5	6"	6'-10	2'-9
	5'	19"	11"	12"	7'-11	12"	15'-9	98	7	12"	45'-11	7'-7	3'-3	1'-4	5'-2	4	12"	22'-8	7	12"	44'-2	48	5	6"	7'-4	2'-9
	6'	19"	11"	12"	8'-11	12"	17'-9	108	7	12"	45'-11	7'-7	3'-3	1'-4	5'-2	4	12"	22'-8	7	12"	44'-2	48	5	6"	7'-10	2'-9
	7'	19"	11"	12"	9'-11	12"	19'-9	118	7	12"	45'-11	7'-7	3'-3	1'-4	5'-2	4	12"	22'-8	7	12"	44'-2	48	5	6"	8'-4	2'-9
	8'	19"	11"	12"	10'-11	12"	21'-9	118	7	12"	45'-11	7'-7	3'-3	1'-4	5'-2	4	12"	22'-8	7	12"	44'-2	48	5	6"	8'-10	2'-9
	9'	19"	11"	12"	11'-11	12"	23'-9	128	7	12"	45'-11	7'-7	3'-3	1'-4	5'-2	4	12"	22'-8	7	12"	44'-2	48	5	6"	9'-4	2'-9
	10'	19"	11"	11½"	12'-11	12"	25'-9	138	7	12"	45'-11	7'-7	3'-3	1'-4	5'-2	4	12"	22'-8	7	12"	44'-2	48	5	6"	9'-10	2'-9
12'	8'	23"	13"	12"	11'-7	12"	23'-0	118	8	14"	55'-2	9'-1	3'-9	1'-8	6'-2	5	14"	27'-0	8	14"	53'-0	56	6	7"	10'-0	3'-5
	9'	23"	13"	12"	12'-7	12"	25'-0	128	8	14"	55'-2	9'-1	3'-9	1'-8	6'-2	5	14"	27'-0	8	14"	53'-0	56	6	7"	10'-6	3'-5
	10'	23"	13"	12"	13'-7	12"	27'-0	138	8	14"	55'-2	9'-1	3'-9	1'-8	6'-2	5	14"	27'-0	8	14"	53'-0	56	6	7"	11'-0	3'-5
	11'	23"	13"	12"	14'-7	12"	29'-0	138	8	14"	55'-2	9'-1	3'-9	1'-8	6'-2	5	14"	27'-0	8	14"	53'-0	56	6	7"	11'-6	3'-5
	12'	23"	13"	9½"	15'-7	12"	31'-0	148	8	14"	55'-2	9'-1	3'-9	1'-8	6'-2	6	14"	27'-0	8	14"	53'-0	56	6	7"	12'-0	3'-5

DESIGN APPROVED J.D. Davis	ARIZONA DEPARTMENT OF TRANSPORTATION HIGHWAYS DIVISION STANDARD DRAWINGS	REVISION 7-88
APPROVED FOR DISTRIBUTION T.A. Bryant, II.	FOUR BARREL BOX CULVERT	STANDARD NO. B-02.45

CADD FILENAME= 2FA
VIEW NAME=

DESIGN				NO	DESCRIPTION OF REVISIONS	MADE BY	DATE
DRAWN				1	Total Redesign of Box	C.H.	6-88
CHECKED				2			
				3			
				4			

TABLE I
0'-10' FILL

Span "S"	Height "H"	Top Slab "T"	Walls "W"	aa Spacing	aa Length	bb Spacing	bb Length	cc Number ✦	dd Bar Size	dd Spacing	dd Length	dd A	dd B	dd C	dd D	dd E	ee & eel Bar Size	ee & eel Spacing	ee Length	eel Length	ff Bar Size	ff Spacing	ff Length	gg Number ✦	hh Bar Size	hh Spacing	hh Length	hh F
6'	3'	9½"	8"	12"	4'-4	12"	8'-9	108	5	14"	17'-9	4'-7	2'-7	6½"	3'-1	2'-2	5	14"	20'-9	14'-1	5	14"	17'-6	40	4	7"	5'-1	2'-5
	4'	9½"	8"	12"	5'-4	12"	10'-9	120	5	14"	17'-9	4'-7	2'-7	6½"	3'-1	2'-2	5	14"	20'-9	14'-1	5	14"	17'-6	40	4	7"	5'-7	2'-5
	5'	9½"	8"	12"	6'-4	12"	12'-9	120	5	14"	17'-9	4'-7	2'-7	6½"	3'-1	2'-2	5	14"	20'-9	14'-1	5	14"	17'-6	40	4	7"	6'-1	2'-5
	6'	9½"	8"	12"	7'-4	12"	14'-9	132	5	14"	17'-9	4'-7	2'-7	6½"	3'-1	2'-2	5	14"	20'-9	14'-1	5	14"	17'-6	40	4	7"	6'-7	2'-5
	7'	9½"	8"	12"	8'-4	12"	16'-9	144	5	13"	17'-9	4'-7	2'-7	6½"	3'-1	2'-2	5	13"	20'-9	14'-1	5	13"	17'-6	40	4	6½"	7'-1	2'-5
8'	3'	9½"	9"	12"	4'-4	12"	8'-9	108	6	14"	23'-2	6'-1	3'-8	6½"	4'-2	2'-10	6	14"	27'-0	18'-3	6	14"	22'-9	60	6	7"	5'-6	2'-6
	4'	9½"	9"	12"	5'-4	12"	10'-9	120	6	14"	23'-2	6'-1	3'-8	6½"	4'-2	2'-10	6	14"	27'-0	18'-3	6	14"	22'-9	60	6	7"	6'-0	2'-6
	5'	9½"	9"	12"	6'-4	12"	12'-9	120	6	14"	23'-2	6'-1	3'-8	6½"	4'-2	2'-10	6	14"	27'-0	18'-3	6	14"	22'-9	60	6	7"	6'-6	2'-6
	6'	9½"	9"	12"	7'-4	12"	14'-9	132	6	14"	23'-2	6'-1	3'-8	6½"	4'-2	2'-10	6	14"	27'-0	18'-3	6	14"	22'-9	60	6	7"	7'-0	2'-6
	7'	9½"	9"	12"	8'-4	12"	16'-9	144	6	13"	23'-2	6'-1	3'-8	6½"	4'-2	2'-10	6	13"	27'-0	18'-3	6	13"	22'-9	60	5	6½"	7'-6	2'-6
	8'	9½"	9"	12"	9'-4	12"	18'-9	144	6	13"	23'-2	6'-1	3'-8	6½"	4'-2	2'-10	6	13"	27'-0	18'-3	6	13"	22'-9	60	6	6½"	8'-0	2'-6
10'	3'	10½"	11"	12"	4'-6	12"	9'-2	108	7	17"	28'-8	7'-7	4'-8	7½"	5'-2	3'-6	6	17"	33'-6	22'-7	7	17"	28'-8	100	6	8½"	6'-1	3'-0
	4'	10½"	11"	12"	5'-6	12"	11'-2	120	7	17"	28'-8	7'-7	4'-8	7½"	5'-2	3'-6	6	17"	33'-6	22'-7	7	17"	28'-8	100	6	8½"	6'-7	3'-0
	5'	10½"	11"	12"	6'-6	12"	13'-2	120	6	12"	28'-8	7'-7	4'-8	7½"	5'-2	3'-6	5	12"	33'-6	22'-7	6	12"	28'-8	100	5	6"	6'-8	2'-8
	6'	10½"	11"	12"	7'-6	12"	15'-2	132	6	12"	28'-8	7'-7	4'-8	7½"	5'-2	3'-6	5	12"	33'-6	22'-7	6	12"	28'-8	100	5	6"	7'-2	2'-8
	7'	10½"	11"	12"	8'-6	12"	17'-2	144	7	15"	28'-8	7'-7	4'-8	7½"	5'-2	3'-6	5	15"	33'-6	22'-7	7	15"	28'-8	100	6	7½"	7'-9	2'-8
	8'	10½"	11"	12"	9'-6	12"	19'-2	144	7	15"	28'-8	7'-7	4'-8	7½"	5'-2	3'-6	5	15"	33'-6	22'-7	7	15"	28'-8	100	6	7½"	8'-3	2'-8
	9'	10½"	11"	12"	10'-6	12"	21'-2	156	7	15"	28'-8	7'-7	4'-8	7½"	5'-2	3'-6	6	15"	33'-6	22'-7	7	15"	28'-8	100	6	7½"	8'-9	2'-8
	10'	10½"	11"	12"	11'-6	12"	23'-2	168	7	14"	28'-8	7'-7	4'-8	7½"	5'-2	3'-6	5	14"	33'-6	22'-7	7	14"	28'-8	100	6	7"	9'-3	2'-8
12'	8'	12½"	13"	12"	9'-10	12"	20'-0	144	7	13"	34'-4	9'-1	5'-6	9½"	6'-2	4'-1	5	13"	40'-0	27'-0	7	13"	34'-4	130	6	6½"	8'-7	2'-10
	9'	12½"	13"	12"	10'-10	12"	22'-0	156	8	16"	34'-4	9'-1	5'-6	9½"	6'-2	4'-1	5	16"	40'-0	27'-0	8	16"	34'-4	130	6	8"	9'-1	2'-10
	10'	12½"	13"	12"	11'-10	12"	24'-0	168	8	16"	34'-4	9'-1	5'-6	9½"	6'-2	4'-1	5	16"	40'-0	27'-0	8	16"	34'-4	130	6	8"	9'-7	2'-10
	11'	12½"	13"	12"	12'-10	12"	26'-0	168	7	12"	34'-4	9'-1	5'-6	9½"	6'-2	4'-1	4	12"	40'-0	27'-0	7	12"	34'-4	130	6	6"	10'-1	2'-10
	12'	12½"	13"	12"	13'-10	12"	28'-0	180	7	12"	34'-4	9'-1	5'-6	9½"	6'-2	4'-1	5	12"	40'-0	27'-0	7	12	34'-4	130	6	6"	10'-7	2'-10

✦Total number of bars in the cross-section.

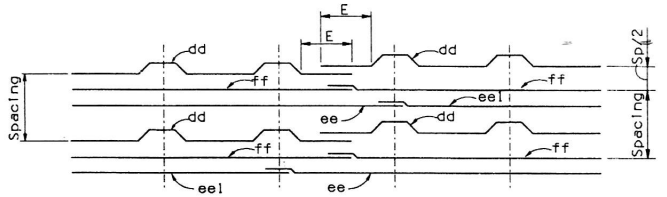

REINFORCING BAR PLACING DIAGRAM

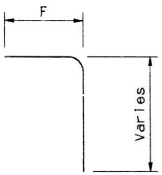

hh bar

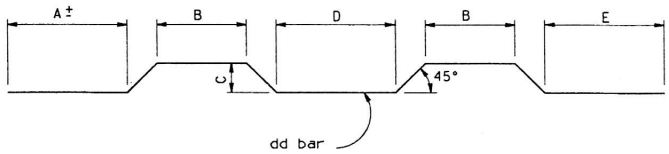

BENDS

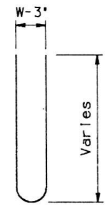

bb bar

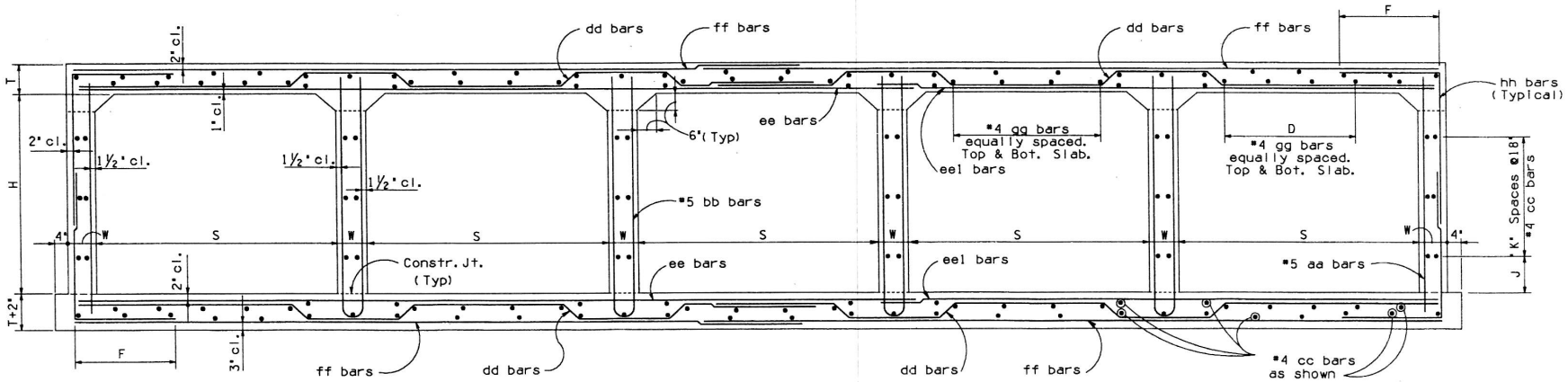

Height "H"	"J" Dim.	"K" Spaces
3'	9"	1
4'	3"	2
5'	12"	2
6'	9"	3
7'	3"	4
8'	12"	4
9'	9"	5
10'	3"	6
11'	12"	6
12'	9"	7

TYPICAL SECTION

NOTE:
See B-02.55 for Tables II thru V.
See B-01.10 for General Notes and Miscellaneous Details.
See B-02.70 for Quantities.

DESIGN APPROVED	ARIZONA DEPARTMENT OF TRANSPORTATION HIGHWAYS DIVISION STANDARD DRAWINGS	REVISION
		7-88
APPROVED FOR DISTRIBUTION	FIVE BARREL BOX CULVERT	STANDARD NO. B-02.50

CADD FILENAME= 2FA
VIEW NAME=

DESIGN			NO	DESCRIPTION OF REVISIONS	MADE BY	DATE
DRAWN			1	Total Redesign of Box	C.H.	6-88
CHECKED			2			
			3			
			4			

TABLE II
10'-15' FILL

Span 'S'	Height 'H'	Top Slab 'T'	Walls 'W'	aa Spacing	aa Length	bb Spacing	bb Length	cc ✦Number	dd Bar Size	dd Spacing	dd Length	A	B	C	D	E	ee & eel Bar Size	ee & eel Spacing	ee Length	eel Length	ff Bar Size	ff Spacing	ff Length	gg ✦Number	hh Bar Size	hh Spacing	hh Length	F
6'	3'	8"	8"	12"	4'-1	12"	8'-0	108	5	14"	17'-7	4'-7	2'-10	5"	3'-1	2'-2	5	14"	20'-9	14'-1	5	14"	17'-6	40	4	7"	5'-0	2'-5
	4'	8"	8"	12"	5'-1	12"	10'-0	120	5	14"	17'-7	4'-7	2'-10	5"	3'-1	2'-2	5	14"	20'-9	14'-1	5	14"	17'-6	40	4	7"	5'-6	2'-5
	5'	8"	8"	12"	6'-1	12"	12'-0	120	5	14"	17'-7	4'-7	2'-10	5"	3'-1	2'-2	5	14"	20'-9	14'-1	5	14'	17'-6	40	4	7"	6'-0	2'-5
	6'	8"	8"	12"	7'-1	12"	14'-0	132	5	14"	17'-7	4'-7	2'-10	5"	3'-1	2'-2	5	14"	20'-9	14'-1	5	14"	17'-6	40	4	7"	6'-6	2'-5
	7'	8"	8"	12"	8'-1	12"	16'-0	144	5	14"	17'-7	4'-7	2'-10	5"	3'-1	2'-2	5	14"	20'-9	14'-1	5	14"	17'-6	40	4	7"	7'-0	2'-5
8'	3'	10½"	9"	12"	4'-6	12"	9'-2	108	6	13"	23'-3	6'-1	3'-6	7½"	4'-2	2'-10	5	13"	27'-0	18'-3	6	13"	22'-9	50	4	6½"	5'-3	2'-6
	4'	10½"	9"	12"	5'-6	12"	11'-2	120	6	13"	23'-3	6'-1	3'-6	7½"	4'-2	2'-10	4	13"	27'-0	18'-3	6	13"	22'-9	50	4	6½"	5'-9	2'-6
	5'	10½"	9"	12"	6'-6	12"	13'-2	120	6	13"	23'-3	6'-1	3'-6	7½"	4'-2	2'-10	4	13"	27'-0	18'-3	6	13"	22'-9	50	4	6½"	6'-3	2'-6
	6'	10½"	9"	12"	7'-6	12"	15'-2	132	6	13"	23'-3	6'-1	3'-6	7½"	4'-2	2'-10	4	13"	27'-0	18'-3	6	13"	22'-9	50	4	6½"	6'-9	2'-6
	7'	10½"	9"	12"	8'-6	12"	17'-2	144	6	13"	23'-3	6'-1	3'-6	7½"	4'-2	2'-10	4	13"	27'-0	18'-3	6	13"	22'-9	50	4	6½"	7'-3	2'-6
	8'	10½"	9"	12"	9'-6	12"	19'-2	144	6	12"	23'-3	6'-1	3'-6	7½"	4'-2	2'-10	4	12"	27'-0	18'-3	6	12"	22'-9	50	4	6"	7'-9	2'-6
10'	3'	12½"	11"	12"	4'-10	12"	9'-8	108	7	14"	29'-0	7'-7	4'-4	9½"	5'-2	3'-6	4	14"	33'-6	22'-7	7	14"	28'-8	60	5	7"	5'-10	2'-8
	4'	12½"	11"	12"	5'-10	12"	11'-8	120	7	13"	29'-0	7'-7	4'-4	9½"	5'-2	3'-6	4	13"	33'-6	22'-7	7	13"	28'-8	60	4	6½"	6'-1	2'-8
	5'	12½"	11"	12"	6'-10	12"	13'-8	120	7	14"	29'-0	7'-7	4'-4	9½"	5'-2	3'-6	4	14"	33'-6	22'-7	7	14"	28'-8	60	5	7"	6'-10	2'-8
	6'	12½"	11"	12"	7'-10	12"	15'-8	132	7	13"	29'-0	7'-7	4'-4	9½"	5'-2	3'-6	4	13"	33'-6	22'-7	7	13"	28'-8	60	5	6½"	7'-4	2'-8
	7'	12½"	11"	12"	8'-10	12"	17'-8	144	7	13"	29'-0	7'-7	4'-4	9½"	5'-2	3'-6	4	13"	33'-6	22'-7	7	13"	28'-8	60	5	6½"	7'-10	2'-8
	8'	12½"	11"	12"	9'-10	12"	19'-8	144	7	13"	29'-0	7'-7	4'-4	9½"	5'-2	3'-6	4	13"	33'-6	22'-7	7	13"	28'-8	60	5	6½"	8'-4	2'-8
	9'	12½"	11"	12"	10'-10	12"	21'-8	156	7	13"	29'-0	7'-7	4'-4	9½"	5'-2	3'-6	4	13"	33'-6	22'-7	7	13"	28'-8	60	5	6½"	8'-10	2'-8
	10'	12½"	11"	12"	11'-10	12"	23'-8	168	7	13"	29'-0	7'-7	4'-4	9½"	5'-2	3'-6	4	13"	33'-6	22'-7	7	13"	28'-8	60	5	6½"	9'-4	2'-8
12'	8'	15"	13"	12"	10'-3	12"	20'-6	144	8	15"	34'-8	9'-1	5'-1	12"	6'-2	4'-1	4	15"	40'-0	27'-0	8	15"	34'-4	70	6	7½"	8'-10	2'-11
	9'	15"	13"	12"	11'-3	12"	22'-6	156	8	15"	34'-8	9'-1	5'-1	12'	6'-2	4'-1	4	15"	40'-0	27'-0	8	15"	34'-4	70	6	7½"	9'-4	2'-11
	10'	15"	13"	12"	12'-3	12"	24'-6	168	8	15"	34'-8	9'-1	5'-1	12"	6'-2	4'-1	5	15"	40'-0	27'-0	8	15"	34'-4	70	6	7½"	9'-10	2'-11
	11'	15"	13"	12"	13'-3	12"	26'-6	168	8	14"	34'-8	9'-1	5'-1	12"	6'-2	4'-1	4	14"	40'-0	27'-0	8	14"	34'-4	70	5	7"	10'-10	3'-5
	12'	15"	13"	12"	14'-3	12"	28'-6	180	8	14"	34'-8	9'-1	5'-1	12"	6'-2	4'-1	5	14"	40'-0	27'-0	8	14"	34'-4	70	6	7"	11'-4	3'-5

TABLE III
15'-20' FILL

Span 'S'	Height 'H'	Top Slab 'T'	Walls 'W'	aa Spacing	aa Length	bb Spacing	bb Length	cc ✦Number	dd Bar Size	dd Spacing	dd Length	A	B	C	D	E	ee & eel Bar Size	ee & eel Spacing	ee Length	eel Length	ff Bar Size	ff Spacing	ff Length	gg ✦Number	hh Bar Size	hh Spacing	hh Length	F
6'	3'	9½"	8"	12"	4'-4	12"	8'-9	108	5	13"	17'-9	4'-7	2'-7	6½"	3'-1	2'-2	5	13"	20'-9	14'-1	5	13"	17'-6	40	4	6½"	5'-1	2'-5
	4'	9½"	8"	12"	5'-4	12"	10'-9	120	5	13"	17'-9	4'-7	2'-7	6½"	3'-1	2'-2	5	13"	20'-9	14'-1	5	13"	17'-6	40	4	6½"	5'-7	2'-5
	5'	9½"	8"	12"	6'-4	12"	12'-9	120	5	13"	17'-9	4'-7	2'-7	6½"	3'-1	2'-2	5	13"	20'-9	14'-1	5	13"	17'-6	40	4	6½"	6'-1	2'-5
	6'	9½"	8"	12"	7'-4	12"	14'-9	132	5	13"	17'-9	4'-7	2'-7	6½"	3'-1	2'-2	5	13"	20'-9	14'-1	5	13"	17'-6	40	4	6½"	6'-7	2'-5
	7'	9½"	8"	12"	8'-4	12"	16'-9	144	5	13"	17'-9	4'-7	2'-7	6½"	3'-1	2'-2	5	13"	20'-9	14'-1	5	13"	17'-6	40	4	6½"	7'-1	2'-5
8'	3'	12"	9"	12"	4'-9	12"	9'-8	108	6	12"	23'-6	6'-1	3'-3	9"	4'-2	2'-10	4	12"	27'-0	18'-3	6	12"	22'-9	50	4	6"	5'-5	2'-6
	4'	12"	9"	12"	5'-9	12"	11'-8	120	6	12"	23'-6	6'-1	3'-3	9"	4'-2	2'-10	4	12"	27'-0	18'-3	6	12"	22'-9	50	4	6"	5'-11	2'-6
	5'	12"	9"	12"	6'-9	12"	13'-8	120	6	12"	23'-6	6'-1	3'-3	9"	4'-2	2'-10	4	12"	27'-0	18'-3	6	12"	22'-9	50	4	6"	6'-5	2'-6
	6'	12"	9"	12"	7'-9	12"	15'-8	132	6	12"	23'-6	6'-1	3'-3	9"	4'-2	2'-10	4	12"	27'-0	18'-3	6	12"	22'-9	50	4	6"	6'-11	2'-6
	7'	12"	9"	12"	8'-9	12"	17'-8	144	6	12"	23'-6	6'-1	3'-3	9"	4'-2	2'-10	4	12"	27'-0	18'-3	6	12"	22'-9	50	4	6"	7'-5	2'-6
	8'	12"	9"	12"	9'-9	12"	19'-8	144	6	12"	23'-6	6'-1	3'-3	9"	4'-2	2'-10	4	12"	27'-0	18'-3	6	12"	22'-9	50	4	6"	7'-11	2'-6
10'	3'	15"	11"	12"	5'-3	12"	10'-8	108	7	13"	29'-4	7'-7	3'-11	1'-0	5'-2	3'-6	4	13"	33'-6	22'-7	7	13"	28'-8	60	5	6½"	6'-0	2'-8
	4'	15"	11"	12"	6'-3	12"	12'-8	120	7	13"	29'-4	7'-7	3'-11	1'-0	5'-2	3'-6	4	13"	33'-6	22'-7	7	13"	28'-8	60	5	6½"	6'-6	2'-8
	5'	15"	11"	12"	7'-3	12"	14'-8	120	7	13"	29'-4	7'-7	3'-11	1'-0	5'-2	3'-6	4	13"	33'-6	22'-7	7	13"	28'-8	60	5	6½"	7'-0	2'-8
	6'	15"	11"	12"	8'-3	12"	16'-8	132	7	13"	29'-4	7'-7	3'-11	1'-0	5'-2	3'-6	4	13"	33'-6	22'-7	7	13"	28'-8	60	5	6½"	7'-6	2'-8
	7'	15"	11"	12"	9'-3	12"	18'-8	144	7	13"	29'-4	7'-7	3'-11	1'-0	5'-2	3'-6	4	13"	33'-6	22'-7	7	13"	28'-8	60	5	6½"	8'-0	2'-8
	8'	15"	11"	12"	10'-3	12"	20'-8	144	7	13"	29'-4	7'-7	3'-11	1'-0	5'-2	3'-6	4	13"	33'-6	22'-7	7	13"	28'-8	60	5	6½"	8'-6	2'-8
	9'	15"	11"	12"	11'-3	12"	22'-8	156	7	13"	29'-4	7'-7	3'-11	1'-0	5'-2	3'-6	4	13"	33'-6	22'-7	7	13"	28'-8	60	5	6½"	9'-0	2'-8
	10'	15"	11"	12"	12'-3	12"	24'-8	168	7	13"	29'-4	7'-7	3'-11	1'-0	5'-2	3'-6	4	13"	33'-6	22'-7	7	13"	28'-8	60	5	6½"	9'-6	2'-9
12'	8'	18"	13"	12"	10'-9	12"	21'-6	144	8	14"	35'-1	9'-1	4'-7	1'-3	6'-2	4'-1	4	14"	40'-0	27'-0	8	14"	34'-4	70	5	7"	9'-6	3'-5
	9'	18"	13"	12"	11'-9	12"	23'-6	156	8	14"	35'-1	9'-1	4'-7	1'-3	6'-2	4'-1	4	14"	40'-0	27'-0	8	14"	34'-4	70	5	7"	10'-0	3'-5
	10'	18"	13"	12"	12'-9	12"	25'-6	168	8	14"	35'-1	9'-1	4'-7	1'-3	6'-2	4'-1	4	14"	40'-0	27'-0	8	14"	34'-4	70	6	7"	10'-7	3'-5
	11'	18"	13"	12"	13'-9	12"	27'-6	168	8	14"	35'-1	9'-1	4'-7	1'-3	6'-2	4'-1	5	14"	40'-0	27'-0	8	14"	34'-4	70	6	7"	11'-1	3'-5
	12'	18"	13"	12"	14'-9	12"	29'-6	180	8	14"	35'-1	9'-1	4'-7	1'-3	6'-2	4'-1	5	14"	40'-0	27'-0	8	14"	34'-4	70	6	7"	11'-7	3'-5

TABLE IV
20'-25' FILL

Span 'S'	Height 'H'	Top Slab 'T'	Walls 'W'	aa Spacing	aa Length	bb Spacing	bb Length	cc ✦Number	dd Bar Size	dd Spacing	dd Length	A	B	C	D	E	ee & eel Bar Size	ee & eel Spacing	ee Length	eel Length	ff Bar Size	ff Spacing	ff Length	gg ✦Number	hh Bar Size	hh Spacing	hh Length	F
6'	3'	11"	8"	12"	4'-7	12"	9'-2	108	5	12"	18'-0	4'-7	2'-4	8"	3'-1	2'-2	5	12"	20'-9	14'-1	5	12"	17'-6	40	4	6"	5'-3	2'-5
	4'	11"	8"	12"	5'-7	12"	11'-2	120	5	12"	18'-0	4'-7	2'-4	8"	3'-1	2'-2	5	12"	20'-9	14'-1	5	12"	17'-6	40	4	6"	5'-9	2'-5
	5'	11"	8"	12"	6'-7	12"	13'-2	120	5	12"	18'-0	4'-7	2'-4	8"	3'-1	2'-2	5	12"	20'-9	14'-1	5	12"	17'-6	40	4	6"	6'-3	2'-5
	6'	11"	8"	12"	7'-7	12"	15'-2	132	5	12"	18'-0	4'-7	2'-4	8"	3'-1	2'-2	5	12"	20'-9	14'-1	5	12"	17'-6	40	4	6"	6'-9	2'-5
	7'	11"	8"	12"	8'-7	12"	17'-2	144	5	12"	18'-0	4'-7	2'-4	8"	3'-1	2'-2	5	12"	20'-9	14'-1	5	12"	17'-6	40	4	6"	7'-3	2'-5
8'	3'	14"	9"	12"	5'-1	12"	10'-2	108	6	12"	23'-9	6'-1	2'-11	11"	4'-2	2'-10	4	12"	27'-0	18'-3	6	12"	22'-9	50	4	6"	5'-7	2'-6
	4'	14"	9"	12"	6'-1	12"	12'-2	120	6	12"	23'-9	6'-1	2'-11	11"	4'-2	2'-10	4	12"	27'-0	18'-3	6	12"	22'-9	50	4	6"	6'-1	2'-6
	5'	14"	9"	12"	7'-1	12"	14'-2	120	6	12"	23'-9	6'-1	2'-11	11"	4'-2	2'-10	4	12"	27'-0	18'-3	6	12"	22'-9	50	4	6"	6'-7	2'-6
	6'	14"	9"	12"	8'-1	12"	16'-2	132	6	12"	23'-9	6'-1	2'-11	11"	4'-2	2'-10	4	12"	27'-0	18'-3	6	12"	22'-9	50	4	6"	7'-1	2'-6
	7'	14"	9"	12"	9'-1	12"	18'-2	144	6	12"	23'-9	6'-1	2'-11	11"	4'-2	2'-10	4	12"	27'-0	18'-3	6	12"	22'-9	50	4	6"	7'-7	2'-6
	8'	14"	9"	12"	10'-1	12"	20'-2	144	6	12"	23'-9	6'-1	2'-11	11"	4'-2	2'-10	4	12"	27'-0	18'-3	6	12"	22'-9	50	4	6"	8'-1	2'-6
10'	3'	17"	11"	12"	5'-7	12"	11'-2	108	7	13"	29'-7	7'-7	3'-7	1'-2	5'-2	3'-6	4	13"	33'-6	22'-7	7	13"	28'-8	60	5	6½"	6'-3	2'-9
	4'	17"	11"	12"	6'-7	12"	13'-2	120	7	13"	29'-7	7'-7	3'-7	1'-2	5'-2	3'-6	4	13"	33'-6	22'-7	7	13"	28'-8	60	5	6½"	6'-9	2'-9
	5'	17"	11"	12"	7'-7	12"	15'-2	120	7	13"	29'-7	7'-7	3'-7	1'-2	5'-2	3'-6	4	13"	33'-6	22'-7	7	13"	28'-8	60	5	6½"	7'-3	2'-9
	6'	17"	11"	12"	8'-7	12"	17'-2	132	7	13"	29'-7	7'-7	3'-7	1'-2	5'-2	3'-6	4	13"	33'-6	22'-7	7	13"	28'-8	60	5	6½"	7'-9	2'-9
	7'	17"	11"	12"	9'-7	12"	19'-2	144	7	13"	29'-7	7'-7	3'-7	1'-2	5'-2	3'-6	4	13"	33'-6	22'-7	7	13"	28'-8	60	5	6½"	8'-3	2'-9
	8'	17"	11"	12"	10'-7	12"	21'-2	144	7	13"	29'-7	7'-7	3'-7	1'-2	5'-2	3'-6	4	13"	33'-6	22'-7	7	13"	28'-8	60	5	6½"	8'-9	2'-9
	9'	17"	11"	12"	11'-7	12"	23'-2	156	7	13"	29'-7	7'-7	3'-7	1'-2	5'-2	3'-6	4	13"	33'-6	22'-7	7	13"	28'-8	60	5	6½"	9'-3	2'-9
	10'	17"	11"	12"	12'-7	12"	25'-2	168	7	13"	29'-7	7'-7	3'-7	1'-2	5'-2	3'-6	4	13"	33'-6	22'-7	7	13"	28'-8	60	5	6½"	9'-9	2'-9
12'	8'	20½"	13"	12"	11'-2	12"	22'-6	144	8	14"	35'-5	9'-1	4'-2	1'-5½	6'-2	4'-1	5	14"	40'-0	27'-0	8	14"	34'-4	70	6	7"	9'-4	2'-11
	9'	20½"	13"	12"	12'-2	12"	24'-6	156	8	14"	35'-5	9'-1	4'-2	1'-5½	6'-2	4'-1	5	14"	40'-0	27'-0	8	14"	34'-4	70	6	7"	9'-10	2'-11
	10'	20½"	13"	12"	13'-2	12"	26'-6	168	8	14"	35'-5	9'-1	4'-2	1'-5½	6'-2	4'-1	5	14"	40'-0	27'-0	8	14"	34'-4	70	6	7"	10'-4	2'-11
	11'	20½"	13"	12"	14'-2	12"	28'-6	168	8	14"	35'-5	9'-1	4'-2	1'-5½	6'-2	4'-1	5	14"	40'-0	27'-0	8	14"	34'-4	70	6	7"	11'-4	3'-5
	12'	20½"	13"	12"	15'-2	12"	30'-6	180	8	13"	35'-5	9'-1	4'-2	1'-5½	6'-2	4'-1	5	13"	40'-0	27'-0	8	13"	34'-4	70	5	6½"	11'-9	3'-5

✦Total number of bars in the cross-section.

TABLE V
25'-30' FILL

Span 'S'	Height 'H'	Top Slab 'T'	Walls 'W'	aa Spacing	aa Length	bb Spacing	bb Length	cc ✦Number	dd Bar Size	dd Spacing	dd Length	A	B	C	D	E	ee & eel Bar Size	ee & eel Spacing	ee Length	eel Length	ff Bar Size	ff Spacing	ff Length	gg ✦Number	hh Bar size	hh Spacing	hh Length	F
6'	3'	12½"	8"	12"	4'-10	12"	9'-8	108	6	16"	18'-2	4'-7	2'-1	9½"	3'-1	2'-2	6	16"	20'-9	14'-1	6	16"	17'-6	40	4	8"	5'-4	2'-5
	4'	12½"	8"	12"	5'-10	12"	11'-8	120	6	16"	18'-2	4'-7	2'-1	9½"	3'-1	2'-2	6	16"	20'-9	14'-1	6	16"	17'-6	40	4	8"	5'-10	2'-5
	5'	12½"	8"	12"	6'-10	12"	13'-8	120	6	16"	18'-2	4'-7	2'-1	9½"	3'-1	2'-2	6	16"	20'-9	14'-1	6	16"	17'-6	40	4	8"	6'-4	2'-5
	6'	12½"	8"	12"	7'-10	12"	15'-8	132	5	12"	18'-2	4'-7	2'-1	9½"	3'-1	2'-2	5	12"	20'-9	14'-1	5	12"	17'-6	40	4	6"	6'-10	2'-5
	7'	12½"	8"	12"	8'-10	12"	17'-8	144	5	12"	18'-2	4'-7	2'-1	9½"	3'-1	2'-2	5	12"	20'-9	14'-1	5	12"	17'-6	40	4	6"	7'-4	2'-5
8'	3'	16	9"	12"	5'-5	12"	11'-0	108	7	16"	24'-0	6'-1	2'-7	1'-1	4'-2	2'-10	4	16"	27'-0	18'-3	7	16"	22'-9	50	5	8"	6'-0	2'-7
	4'	16"	9"	12"	6'-5	12"	13'-0	120	7	16"	24'-0	6'-1	2'-7	1'-1	4'-2	2'-10	4	16"	27'-0	18'-3	7	16"	22'-9	50	5	8"	6'-6	2'-7
	5'	16"	9"	12"	7'-5	12"	15'-0	120	6	12"	24'-0	6'-1	2'-7	1'-1	4'-2	2'-10	4	12"	27'-0	18'-3	6	12"	22'-9	50	4	6"	6'-9	2'-6
	6'	16"	9"	12"	8'-5	12"	17'-0	132	6	12"	24'-0	6'-1	2'-7	1'-1	4'-2	2'-10	4	12"	27'-0	18'-3	6	12"	22'-9	50	4	6"	7'-3	2'-6
	7'	16"	9"	12"	9'-5	12"	19'-0	144	6	12"	24'-0	6'-1	2'-7	1'-1	4'-2	2'-10	4	12"	27'-0	18'-3	6	12"	22'-9	50	4	6"	7'-9	2'-6
	8'	16"	9"	12"	10'-5	12"	21'-0	144	6	12"	24'-0	6'-1	2'-7	1'-1	4'-2	2'-10	4	12"	27'-0	18'-3	6	12"	22'-9	50	4	6"	8'-3	2'-6
10'	3'	19"	11"	12"	5'-11	12"	11'-9	108	7	12"	29'-11	7'-7	3'-3	1'-4	5'-2	3'-6	4	12"	33'-6	22'-7	7	12"	28'-8	60	5	6"	6'-6	2'-9
	4'	19"	11"	12"	6'-11	12"	13'-9	120	7	12"	29'-11	7'-7	3'-3	1'-4	5'-2	3'-6	4	12"	33'-6	22'-7	7	12"	28'-8	60	5	6"	7'-0	2'-9
	5'	19"	11"	12"	7'-11	12"	15'-9	120	7	12"	29'-11	7'-7	3'-3	1'-4	5'-2	3'-6	4	12"	33'-6	22'-7	7	12"	28'-8	60	5	6"	7'-6	2'-9
	6'	19"	11"	12"	8'-11	12"	17'-9	132	7	12"	29'-11	7'-7	3'-3	1'-4	5'-2	3'-6	4	12"	33'-6	22'-7	7	12"	28'-8	60	5	6"	8'-0	2'-9
	7'	19"	11"	12"	9'-11	12"	19'-9	144	7	12"	29'-11	7'-7	3'-3	1'-4	5'-2	3'-6	4	12"	33'-6	22'-7	7	12"	28'-8	60	5	6"	8'-6	2'-9
	8'	19"	11"	12"	10'-11	12"	21'-9	144	7	12"	29'-11	7'-7	3'-3	1'-4	5'-2	3'-6	4	12"	33'-6	22'-7	7	12"	28'-8	60	5	6"	9'-0	2'-9
	9'	19"	11"	12"	11'-11	12"	23'-9	156	7	12"	29'-11	7'-7	3'-3	1'-4	5'-2	3'-6	4	12"	33'-6	22'-7	7	12"	28'-8	60	5	6"	9'-6	2'-9
	10'	19"	11"	11"	12'-11	12"	25'-9	168	7	12"	29'-11	7'-7	3'-3	1'-4	5'-2	3'-6	4	12"	33'-6	22'-7	7	12"	28'-8	60	5	6"	10'-0	2'-9
12'	8'	23"	13"	12"	11'-7	12"	23'-0	144	8	14"	35'-9	9'-1	3'-9	1'-8	6'-2	4'-1	5	14"	40'-0	27'-0	8	14"	34'-4	70	6	7"	10'-0	3'-5
	9'	23"	13"	12"	12'-7	12"	25'-0	156	8	14"	35'-9	9'-1	3'-9	1'-8	6'-2	4'-1	5	14"	40'-0	27'-0	8	14"	34'-4	70	6	7"	10'-6	3'-5
	10'	23"	13"	12"	13'-7	12"	27'-0	168	8	14"	35'-9	9'-1	3'-9	1'-8	6'-2	4'-1	5	14"	40'-0	27'-0	8	14"	34'-4	70	6	7"	11'-0	3'-5
	11'	23"	13"	12"	14'-7	12"	29'-0	168	8	14"	35'-9	9'-1	3'-9	1'-8	6'-2	4'-1	5	14"	40'-0	27'-0	8	14"	34'-4	70	6	7"	11'-6	3'-5
	12'	23"	13"	9"	15'-7	12"	31'-0	180	8	14"	35'-9	9'-1	3'-9	1'-8	6'-2	4'-1	6	14"	40'-0	27'-0	8	14"	34'-4	70	6	7"	12'-0	3'-5

DESIGN APPROVED	ARIZONA DEPARTMENT OF TRANSPORTATION HIGHWAYS DIVISION STANDARD DRAWINGS	REVISION 7-88
APPROVED FOR DISTRIBUTION	FIVE BARREL BOX CULVERT	STANDARD NO. B-02.55

CADD FILENAME: ZFA
VIEW NAME:

DESIGN			NO	DESCRIPTION OF REVISIONS	MADE BY	DATE
DRAWN			1	Total Redesign of Box	J. M.	6-88
CHECKED			2			
			3			
			4			

TABLE I
0'-10' FILL

Span "S"	Height "H"	Top Slab "T"	Walls "W"	aa Spacing	aa Length	bb Spacing	bb Length	cc Number ✦	dd Bar Size	dd Spacing	dd Length	dd A	dd B	dd C	dd D	dd E	ee Bar Size	ee Spacing	ee Length	ff Bar Size	ff Spacing	ff Length	gg Number ✦	hh Bar Size	hh Spacing	hh Length	hh F
6'	3'	9½"	8"	12"	4'-4	12"	8'-9	128	5	14"	26'-2	4'-7	2'-7	6½"	3'-1	6'-9	5	14"	20'-9	5	14"	16'-0	48	4	7"	5'-1	2'-5
	4'	9½"	8"	12"	5'-4	12"	10'-9	142	5	14"	26'-2	4'-7	2'-7	6½"	3'-1	6'-9	5	14"	20'-9	5	14"	16'-0	48	4	7"	5'-7	2'-5
	5'	9½"	8"	12"	6'-4	12"	12'-9	142	5	14"	26'-2	4'-7	2'-7	6½"	3'-1	6'-9	5	14"	20'-9	5	14"	16'-0	48	4	7"	6'-1	2'-5
	6'	9½"	8"	12"	7'-4	12"	14'-9	156	5	14"	26'-2	4'-7	2'-7	6½"	3'-1	6'-9	5	14"	20'-9	5	14"	16'-0	48	4	7"	6'-7	2'-5
	7'	9½"	8"	12"	8'-4	12"	16'-9	170	5	13"	26'-2	4'-7	2'-7	6½"	3'-1	6'-9	5	13"	20'-9	5	13"	16'-0	48	4	6½"	7'-1	2'-5
8'	3'	9½"	9"	12"	4'-4	12"	8'-9	128	6	14"	33'-9	6'-1	3'-8	6½"	4'-2	8'-7	6	14"	27'-0	6	14"	21'-0	96	6	7"	5'-6	2'-6
	4'	9½"	9"	12"	5'-4	12"	10'-9	142	6	14"	33'-9	6'-1	3'-8	6½"	4'-2	8'-7	6	14"	27'-0	6	14"	21'-0	96	6	7"	6'-0	2'-6
	5'	9½"	9"	12"	6'-4	12"	12'-9	142	6	14"	33'-9	6'-1	3'-8	6½"	4'-2	8'-7	6	14"	27'-0	6	14"	21'-0	96	6	7"	6'-6	2'-6
	6'	9½"	9"	12"	7'-4	12"	14'-9	156	6	14"	33'-9	6'-1	3'-8	6½"	4'-2	8'-7	6	14"	27'-0	6	14"	21'-0	96	6	7"	7'-0	2'-6
	7'	9½"	9"	12"	8'-4	12"	16'-9	170	6	13"	33'-9	6'-1	3'-8	6½"	4'-2	8'-7	6	13"	27'-0	6	13"	21'-0	96	5	6½"	7'-5	2'-6
	8'	9½"	9"	12"	9'-4	12"	18'-9	170	6	13"	33'-9	6'-1	3'-8	6½"	4'-2	8'-7	6	13"	27'-0	6	13"	21'-0	96	6	6½"	8'-0	2'-6
10'	3'	10½"	11"	12"	4'-6	12"	9'-2	128	7	17"	42'-3	7'-7	4'-8	7½"	5'-2	11'-1	6	17"	33'-6	7	17"	26'-6	132	6	8½"	6'-1	3'-0
	4'	10½"	11"	12"	5'-6	12"	11'-2	142	7	17"	42'-3	7'-7	4'-8	7½"	5'-2	11'-1	6	17"	33'-6	7	17"	26'-6	132	6	8½"	6'-7	3'-0
	5'	10½"	11"	12"	6'-6	12"	13'-2	142	6	12"	42'-3	7'-7	4'-8	7½"	5'-2	11'-1	5	12"	33'-6	6	12"	26'-6	132	5	6"	6'-8	2'-8
	6'	10½"	11"	12"	7'-6	12"	15'-2	156	6	12"	42'-3	7'-7	4'-8	7½"	5'-2	11'-1	5	12"	33'-6	6	12"	26'-6	132	5	6"	7'-2	2'-8
	7'	10½"	11"	12"	8'-6	12"	17'-2	170	7	15"	42'-3	7'-7	4'-8	7½"	5'-2	11'-1	5	15"	33'-6	7	15"	26'-6	132	6	7½"	7'-9	2'-8
	8'	10½"	11"	12"	9'-6	12"	19'-2	170	7	15"	42'-3	7'-7	4'-8	7½"	5'-2	11'-1	5	15"	33'-6	7	15"	26'-6	132	6	7½"	8'-3	2'-8
	9'	10½"	11"	12"	10'-6	12"	21'-2	184	7	15"	42'-3	7'-7	4'-8	7½"	5'-2	11'-1	6	15"	33'-6	7	15"	26'-6	132	6	7½"	8'-9	2'-8
	10'	10½"	11"	12"	11'-6	12"	23'-2	198	7	14"	42'-3	7'-7	4'-8	7½"	5'-2	11'-1	5	14"	33'-6	7	14"	26'-6	132	6	7"	9'-3	2'-8
12'	8'	12½"	13"	12"	9'-10	12"	20'-0	170	7	13"	50'-8	9'-1	5'-6	9½"	6'-2	13'-3	5	13"	40'-0	7	13"	31'-8	156	6	6½"	8'-7	2'-10
	9'	12½"	13"	12"	10'-10	12"	22'-0	184	8	16"	50'-8	9'-1	5'-6	9½"	6'-2	13'-3	5	16"	40'-0	8	16"	31'-8	156	6	8"	9'-1	2'-10
	10'	12½"	13"	12"	11'-10	12"	24'-0	198	8	16"	50'-8	9'-1	5'-6	9½"	6'-2	13'-3	5	16"	40'-0	8	16"	31'-8	156	6	8"	9'-7	2'-10
	11'	12½"	13"	12"	12'-10	12"	26'-0	198	7	12"	50'-8	9'-1	5'-6	9½"	6'-2	13'-3	4	12"	40'-0	7	12"	31'-8	156	6	6"	10'-1	2'-10
	12'	12½"	13"	12"	13'-10	12"	28'-0	212	7	12"	50'-8	9'-1	5'-6	9½"	6'-2	13'-3	5	12"	40'-0	7	12"	31'-8	156	6	6"	10'-7	2'-10

✦Total number of bars in the cross-section.

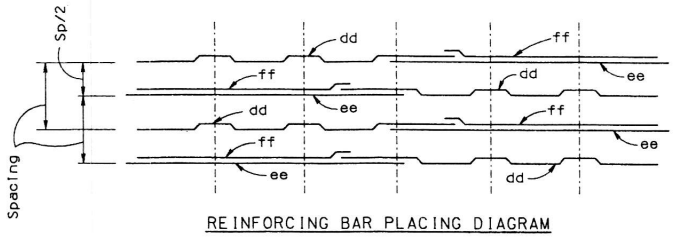

REINFORCING BAR PLACING DIAGRAM

Height "H"	"J" Dim.	"K" Spaces
3'	9"	1
4'	3"	2
5'	12"	2
6'	9"	3
7'	3"	4
8'	12"	4
9'	9"	5
10'	3"	6
11'	12"	6
12'	9"	7

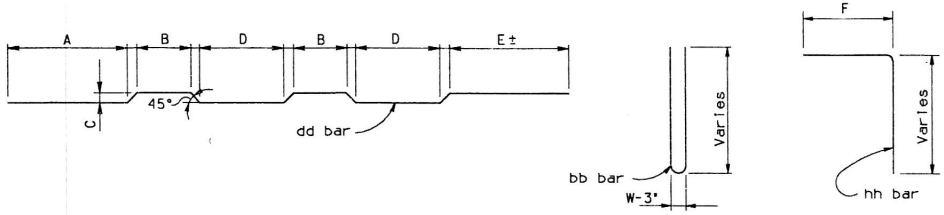

BENDS

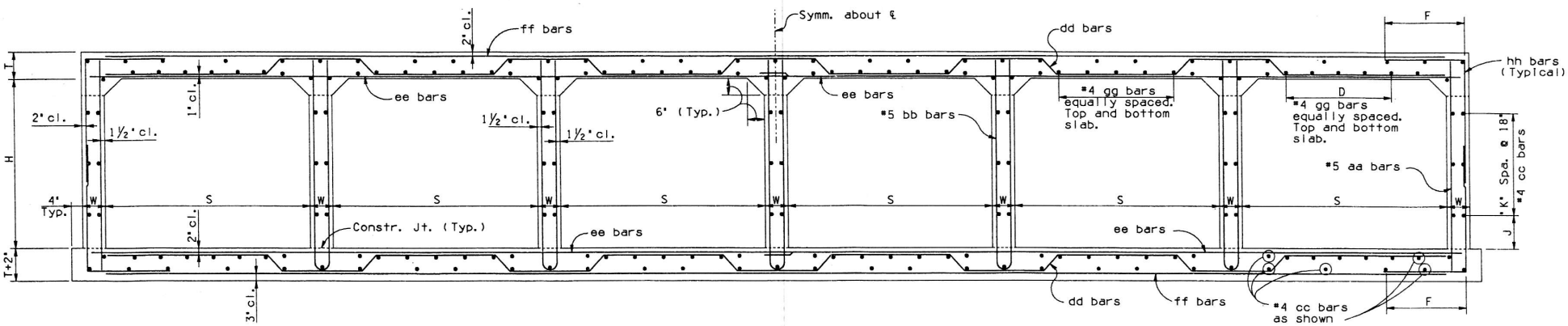

TYPICAL SECTION

NOTE:
See B-02.65 for Tables II thru V.
See B-01.10 for General Notes and Miscellaneous Details.
See B-02.70 for Quantities.

	DESIGN APPROVED	ARIZONA DEPARTMENT OF TRANSPORTATION HIGHWAYS DIVISION STANDARD DRAWINGS	REVISION 7-88
	APPROVED FOR DISTRIBUTION	SIX BARREL BOX CULVERT	STANDARD NO. B-02.60

CADD FILENAME= 2FA
VIEW NAME=

TABLE II
10'-15' FILL

Span "S"	Height "H"	Top Slab "T"	Walls "W"	aa Spacing	aa Length	bb Spacing	bb Length	cc ✦ Number	dd Bar Size	dd Spacing	dd Length	dd A	dd B	dd C	dd D	dd E	ee Bar Size	ee Spacing	ee Length	ff Bar Size	ff Spacing	ff Length	gg ✦ Number	hh Bar Size	hh Spacing	hh Length	hh F
6'	3'	8"	8"	12"	4'-1	12"	8'-0	128	5	14"	23'-0	4'-7	2'-10	5"	3'-1	4'-0	5	14"	20'-9	5	14"	16'-0	48	4	7"	5'-0	2'-5
	4'	8"	8"	12"	5'-1	12"	10'-0	142	5	14"	23'-0	4'-7	2'-10	5"	3'-1	4'-0	5	14"	20'-9	5	14"	16'-0	48	4	7"	5'-6	2'-5
	5'	8"	8"	12"	6'-1	12"	12'-0	142	5	14"	23'-0	4'-7	2'-10	5"	3'-1	4'-0	5	14"	20'-9	5	14"	16'-0	48	4	7"	6'-0	2'-5
	6'	8"	8"	12"	7'-1	12"	14'-0	156	5	14"	23'-0	4'-7	2'-10	5"	3'-1	4'-0	5	14"	20'-9	5	14"	16'-0	48	4	7"	6'-6	2'-5
	7'	8"	8"	12"	8'-1	12"	16'-0	170	5	14"	23'-0	4'-7	2'-10	5"	3'-1	4'-0	5	14"	20'-9	5	14"	16'-0	48	4	7"	7'-0	2'-5
8'	3'	10½"	9"	12"	4'-6	12"	9'-2	128	6	13"	30'-5	6'-1	3'-6	7½"	4'-2	5'-0	5	13"	27'-0	6	13"	21'-0	60	4	6½"	5'-3	2'-6
	4'	10½"	9"	12"	5'-6	12"	11'-2	142	6	13"	30'-5	6'-1	3'-6	7½"	4'-2	5'-0	4	13"	27'-0	6	13"	21'-0	60	4	6½"	5'-9	2'-6
	5'	10½"	9"	12"	6'-6	12"	13'-2	142	6	13"	30'-5	6'-1	3'-6	7½"	4'-2	5'-0	4	13"	27'-0	6	13"	21'-0	60	4	6½"	6'-3	2'-6
	6'	10½"	9"	12"	7'-6	12"	15'-2	156	6	13"	30'-5	6'-1	3'-6	7½"	4'-2	5'-0	4	13"	27'-0	6	13"	21'-0	60	4	6½"	6'-9	2'-6
	7'	10½"	9"	12"	8'-6	12"	17'-2	170	6	13"	30'-5	6'-1	3'-6	7½"	4'-2	5'-0	4	13"	27'-0	6	13"	21'-0	60	4	6½"	7'-3	2'-6
	8'	10½"	9"	12"	9'-6	12"	19'-2	170	6	12"	30'-5	6'-1	3'-6	7½"	4'-2	5'-0	4	12"	27'-0	6	12"	21'-0	60	4	6"	7'-9	2'-6
10'	3'	12½"	11"	12"	4'-10	12"	9'-8	128	7	14"	38'-0	7'-7	4'-4	9½"	5'-2	6'-4	4	14"	33'-6	7	14"	26'-6	72	5	7"	5'-10	2'-8
	4'	12½"	11"	12"	5'-10	12"	11'-8	142	7	13"	38'-0	7'-7	4'-4	9½"	5'-2	6'-4	4	13"	33'-6	7	13"	26'-6	72	4	6½"	6'-3	2'-8
	5'	12½"	11"	12"	6'-10	12"	13'-8	142	7	14"	38'-0	7'-7	4'-4	9½"	5'-2	6'-4	4	14"	33'-6	7	14"	26'-6	72	5	7"	6'-10	2'-8
	6'	12½"	11"	12"	7'-10	12"	15'-8	156	7	13"	38'-0	7'-7	4'-4	9½"	5'-2	6'-4	4	13"	33'-6	7	13"	26'-6	72	5	6½"	7'-4	2'-8
	7'	12½"	11"	12"	8'-10	12"	17'-8	170	7	13"	38'-0	7'-7	4'-4	9½"	5'-2	6'-4	4	13"	33'-6	7	13"	26'-6	72	5	6½"	7'-10	2'-8
	8'	12½"	11"	12"	9'-10	12"	19'-8	170	7	13"	38'-0	7'-7	4'-4	9½"	5'-2	6'-4	4	13"	33'-6	7	13"	26'-6	72	5	6½"	8'-4	2'-8
	9'	12½"	11"	12"	10'-10	12"	21'-8	184	7	13"	38'-0	7'-7	4'-4	9½"	5'-2	6'-4	4	13"	33'-6	7	13"	26'-6	72	5	6½"	8'-10	2'-8
	10'	12½"	11"	12"	11'-10	12"	23'-8	198	7	13"	38'-0	7'-7	4'-4	9½"	5'-2	6'-4	4	13"	33'-6	7	13"	26'-6	72	5	6½"	9'-4	2'-8
12'	8'	15"	13"	12"	10'-3	12"	20'-6	170	8	15"	45'-10	9'-1	5'-1	12"	6'-2	7'-9	4	15"	40'-0	8	15"	31'-8	84	6	7½"	8'-10	2'-11
	9'	15"	13"	12"	11'-3	12"	22'-6	184	8	15"	45'-10	9'-1	5'-1	12"	6'-2	7'-9	4	15"	40'-0	8	15"	31'-8	84	6	7½"	9'-4	2'-11
	10'	15"	13"	12"	12'-3	12"	24'-6	198	8	15"	45'-10	9'-1	5'-1	12"	6'-2	7'-9	5	15"	40'-0	8	15"	31'-8	84	6	7½"	9'-10	2'-11
	11'	15"	13"	12"	13'-3	12"	26'-6	198	8	14"	45'-10	9'-1	5'-1	12"	6'-2	7'-9	4	14"	40'-0	8	14"	31'-8	84	5	7"	10'-9	3'-5
	12'	15"	13"	12"	14'-3	12"	28'-6	212	8	14"	45'-10	9'-1	5'-1	12"	6'-2	7'-9	5	14"	40'-0	8	14"	31'-8	84	6	7"	11'-4	3'-5

TABLE III
15'-20' FILL

Span "S"	Height "H"	Top Slab "T"	Walls "W"	aa Spacing	aa Length	bb Spacing	bb Length	cc ✦ Number	dd Bar Size	dd Spacing	dd Length	dd A	dd B	dd C	dd D	dd E	ee Bar Size	ee Spacing	ee Length	ff Bar Size	ff Spacing	ff Length	gg ✦ Number	hh Bar Size	hh Spacing	hh Length	hh F
6'	3'	9½"	8"	12"	4'-4	12"	8'-9	128	5	13"	23'-0	4'-7	2'-7	6½"	3'-1	3'-9	5	13"	20'-9	5	13"	16'-0	48	4	6½"	5'-1	2'-5
	4'	9½"	8"	12"	5'-4	12"	10'-9	142	5	13"	23'-0	4'-7	2'-7	6½"	3'-1	3'-9	5	13"	20'-9	5	13"	16'-0	48	4	6½"	5'-7	2'-5
	5'	9½"	8"	12"	6'-4	12"	12'-9	142	5	13"	23'-0	4'-7	2'-7	6½"	3'-1	3'-9	5	13"	20'-9	5	13"	16'-0	48	4	6½"	6'-1	2'-5
	6'	9½"	8"	12"	7'-4	12"	14'-9	156	5	13"	23'-0	4'-7	2'-7	6½"	3'-1	3'-9	5	13"	20'-9	5	13"	16'-0	48	4	6½"	6'-7	2'-5
	7'	9½"	8"	12"	8'-4	12"	16'-9	170	5	13"	23'-0	4'-7	2'-7	6½"	3'-1	3'-9	5	13"	20'-9	5	13"	16'-0	48	4	6½"	7'-1	2'-5
8'	3'	12"	9"	12"	4'-9	12"	9'-8	128	6	12"	30'-6	6'-1	3'-3	9"	4'-2	4'-9	4	12"	27'-0	6	12"	21'-0	60	4	6"	5'-5	2'-6
	4'	12"	9"	12"	5'-9	12"	11'-8	142	6	12"	30'-6	6'-1	3'-3	9"	4'-2	4'-9	4	12"	27'-0	6	12"	21'-0	60	4	6"	5'-11	2'-6
	5'	12"	9"	12"	6'-9	12"	13'-8	142	6	12"	30'-6	6'-1	3'-3	9"	4'-2	4'-9	4	12"	27'-0	6	12"	21'-0	60	4	6"	6'-5	2'-6
	6'	12"	9"	12"	7'-9	12"	15'-8	156	6	12"	30'-6	6'-1	3'-3	9"	4'-2	4'-9	4	12"	27'-0	6	12"	21'-0	60	4	6"	6'-11	2'-6
	7'	12"	9"	12"	8'-9	12"	17'-8	170	6	12"	30'-6	6'-1	3'-3	9"	4'-2	4'-9	4	12"	27'-0	6	12"	21'-0	60	4	6"	7'-5	2'-6
	8'	12"	9"	12"	9'-9	12"	19'-8	170	6	12"	30'-6	6'-1	3'-3	9"	4'-2	4'-9	4	12"	27'-0	6	12"	21'-0	60	4	6"	7'-11	2'-6
10'	3'	15"	11"	12"	5'-3	12"	10'-8	128	7	13"	38'-3	7'-7	3'-11	1'-0	5'-2	5'-11	4	13"	33'-6	7	13"	26'-6	72	4	6½"	6'-0	2'-8
	4'	15"	11"	12"	6'-3	12"	12'-8	142	7	13"	38'-3	7'-7	3'-11	1'-0	5'-2	5'-11	4	13"	33'-6	7	13"	26'-6	72	5	6½"	6'-6	2'-8
	5'	15"	11"	12"	7'-3	12"	14'-8	142	7	13"	38'-3	7'-7	3'-11	1'-0	5'-2	5'-11	4	13"	33'-6	7	13"	26'-6	72	5	6½"	7'-0	2'-8
	6'	15"	11"	12"	8'-3	12"	16'-8	156	7	13"	38'-3	7'-7	3'-11	1'-0	5'-2	5'-11	4	13"	33'-6	7	13"	26'-6	72	5	6½"	7'-6	2'-8
	7'	15"	11"	12"	9'-3	12"	18'-8	170	7	13"	38'-3	7'-7	3'-11	1'-0	5'-2	5'-11	4	13"	33'-6	7	13"	26'-6	72	5	6½"	8'-0	2'-8
	8'	15"	11"	12"	10'-3	12"	20'-8	170	7	13"	38'-3	7'-7	3'-11	1'-0	5'-2	5'-11	4	13"	33'-6	7	13"	26'-6	72	5	6½"	8'-6	2'-8
	9'	15"	11"	12"	11'-3	12"	22'-8	184	7	13"	38'-3	7'-7	3'-11	1'-0	5'-2	5'-11	4	13"	33'-6	7	13"	26'-6	72	5	6½"	9'-0	2'-8
	10'	15"	11"	12"	12'-3	12"	24'-8	198	7	13"	38'-3	7'-7	3'-11	1'-0	5'-2	5'-11	4	13"	33'-6	7	13"	26'-6	72	5	6½"	9'-7	2'-9
12'	8'	18"	13"	12"	10'-9	12"	21'-6	170	8	14"	46'-1	9'-1	4'-7	1'-3	6'-2	7'-3	4	14"	40'-0	8	14"	31'-8	84	5	7"	9'-6	3'-5
	9'	18"	13"	12"	11'-9	12"	23'-6	184	8	14"	46'-1	9'-1	4'-7	1'-3	6'-2	7'-3	4	14"	40'-0	8	14"	31'-8	84	5	7"	10'-0	3'-5
	10'	18"	13"	12"	12'-9	12"	25'-6	198	8	14"	46'-1	9'-1	4'-7	1'-3	6'-2	7'-3	4	14"	40'-0	8	14"	31'-8	84	6	7"	10'-7	3'-5
	11'	18"	13"	12"	13'-9	12"	27'-6	198	8	14"	46'-1	9'-1	4'-7	1'-3	6'-2	7'-3	5	14"	40'-0	8	14"	31'-8	84	6	7"	11'-1	3'-5
	12'	18"	13"	12"	14'-9	12"	29'-6	212	8	14"	46'-1	9'-1	4'-7	1'-3	6'-2	7'-3	5	14"	40'-0	8	14"	31'-8	84	6	7"	11'-7	3'-5

TABLE IV
20'-25' FILL

Span "S"	Height "H"	Top Slab "T"	Walls "W"	aa Spacing	aa Length	bb Spacing	bb Length	cc ✦ Number	dd Bar Size	dd Spacing	dd Length	dd A	dd B	dd C	dd D	dd E	ee Bar Size	ee Spacing	ee Length	ff Bar Size	ff Spacing	ff Length	gg ✦ Number	hh Bar Size	hh Spacing	hh Length	hh F
6'	3'	11"	8"	12"	4'-7	12"	9'-2	128	5	12"	23'-3	4'-7	2'-4	8"	3'-1	3'-6	5	12"	20'-9	5	12"	16'-0	48	4	6"	5'-3	2'-5
	4'	11"	8"	12"	5'-7	12"	11'-2	142	5	12"	23'-3	4'-7	2'-4	8"	3'-1	3'-6	5	12"	20'-9	5	12"	16'-0	48	4	6"	5'-9	2'-5
	5'	11"	8"	12"	6'-7	12"	13'-2	142	5	12"	23'-3	4'-7	2'-4	8"	3'-1	3'-6	5	12"	20'-9	5	12"	16'-0	48	4	6"	6'-3	2'-5
	6'	11"	8"	12"	7'-7	12"	15'-2	156	5	12"	23'-3	4'-7	2'-4	8"	3'-1	3'-6	5	12"	20'-9	5	12"	16'-0	48	4	6"	6'-9	2'-5
	7'	11"	8"	12"	8'-7	12"	17'-2	170	5	12"	23'-3	4'-7	2'-4	8"	3'-1	3'-6	5	12"	20'-9	5	12"	16'-0	48	4	6"	7'-3	2'-5
8'	3'	14"	9"	12"	5'-1	12"	10'-2	128	6	12"	30'-9	6'-1	2'-11	11"	4'-2	4'-5	4	12"	27'-0	6	12"	21'-0	60	4	6"	5'-7	2'-6
	4'	14"	9"	12"	6'-1	12"	12'-2	142	6	12"	30'-9	6'-1	2'-11	11"	4'-2	4'-5	4	12"	27'-0	6	12"	21'-0	60	4	6"	6'-1	2'-6
	5'	14"	9"	12"	7'-1	12"	14'-2	142	6	12"	30'-9	6'-1	2'-11	11"	4'-2	4'-5	4	12"	27'-0	6	12"	21'-0	60	4	6"	6'-7	2'-6
	6'	14"	9"	12"	8'-1	12"	16'-2	156	6	12"	30'-9	6'-1	2'-11	11"	4'-2	4'-5	4	12"	27'-0	6	12"	21'-0	60	4	6"	7'-1	2'-6
	7'	14"	9"	12"	9'-1	12"	18'-2	170	6	12"	30'-9	6'-1	2'-11	11"	4'-2	4'-5	4	12"	27'-0	6	12"	21'-0	60	4	6"	7'-7	2'-6
	8'	14"	9"	12"	10'-1	12"	20'-2	170	6	12"	30'-9	6'-1	2'-11	11"	4'-2	4'-5	4	12"	27'-0	6	12"	21'-0	60	4	6"	8'-1	2'-6
10'	3'	17"	11"	12"	5'-7	12"	11'-2	128	7	13"	38'-5	7'-7	3'-7	1'-2	5'-2	5'-7	4	13"	33'-6	7	13"	26'-6	72	5	6½"	6'-3	2'-9
	4'	17"	11"	12"	6'-7	12"	13'-2	142	7	13"	38'-5	7'-7	3'-7	1'-2	5'-2	5'-7	4	13"	33'-6	7	13"	26'-6	72	5	6½"	6'-9	2'-9
	5'	17"	11"	12"	7'-7	12"	15'-2	142	7	13"	38'-5	7'-7	3'-7	1'-2	5'-2	5'-7	4	13"	33'-6	7	13"	26'-6	72	5	6½"	7'-3	2'-9
	6'	17"	11"	12"	8'-7	12"	17'-2	156	7	13"	38'-5	7'-7	3'-7	1'-2	5'-2	5'-7	4	13"	33'-6	7	13"	26'-6	72	5	6½"	7'-9	2'-9
	7'	17"	11"	12"	9'-7	12"	19'-2	170	7	13"	38'-5	7'-7	3'-7	1'-2	5'-2	5'-7	4	13"	33'-6	7	13"	26'-6	72	5	6½"	8'-3	2'-9
	8'	17"	11"	12"	10'-7	12"	21'-2	170	7	13"	38'-5	7'-7	3'-7	1'-2	5'-2	5'-7	4	13"	33'-6	7	13"	26'-6	72	5	6½"	8'-9	2'-9
	9'	17"	11"	12"	11'-7	12"	23'-2	184	7	13"	38'-5	7'-7	3'-7	1'-2	5'-2	5'-7	4	13"	33'-6	7	13"	26'-6	72	5	6½"	9'-3	2'-9
	10'	17"	11"	12"	12'-7	12"	25'-2	198	7	13"	38'-5	7'-7	3'-7	1'-2	5'-2	5'-7	4	13"	33'-6	7	13"	26'-6	72	5	6½"	9'-9	2'-9
12'	8'	20½"	13"	12"	11'-2	12"	22'-6	170	8	14"	46'-4	9'-1	4'-2	1'-5½	6'-2	6'-10	5	14"	40'-0	8	14"	31'-8	84	6	7"	9'-4	2'-11
	9'	20½"	13"	12"	12'-2	12"	24'-6	184	8	14"	46'-4	9'-1	4'-2	1'-5½	6'-2	6'-10	5	14"	40'-0	8	14"	31'-8	84	6	7"	9'-10	2'-11
	10'	20½"	13"	12"	13'-2	12"	26'-6	198	8	14"	46'-4	9'-1	4'-2	1'-5½	6'-2	6'-10	5	14"	40'-0	8	14"	31'-8	84	6	7"	10'-4	2'-11
	11'	20½"	13"	12"	14'-2	12"	28'-6	198	8	14"	46'-4	9'-1	4'-2	1'-5½	6'-2	6'-10	5	14"	40'-0	8	14"	31'-8	84	6	7"	11'-4	3'-5
	12'	20½"	13"	12"	15'-2	12"	30'-6	212	8	13"	46'-4	9'-1	4'-2	1'-5½	6'-2	6'-10	5	13"	40'-0	8	13"	31'-8	84	6	6½"	11'-9	3'-5

✦ Total number of bars in the cross-section.

TABLE V
25'-30' FILL

Span "S"	Height "H"	Top Slab "T"	Walls "W"	aa Spacing	aa Length	bb Spacing	bb Length	cc ✦ Number	dd Bar Size	dd Spacing	dd Length	dd A	dd B	dd C	dd D	dd E	ee Bar Size	ee Spacing	ee Length	ff Bar Size	ff Spacing	ff Length	gg ✦ Number	hh Bar Size	hh Spacing	hh Length	hh F
6'	3'	12½"	8"	12"	4'-10	12"	9'-8	128	6	16"	23'-8	4'-7	2'-1	9½"	3'-1	3'-7	6	16"	20'-9	6	16"	16'-0	48	4	8"	5'-4	2'-5
	4'	12½"	8"	12"	5'-10	12"	11'-8	142	6	16"	23'-8	4'-7	2'-1	9½"	3'-1	3'-7	6	16"	20'-9	6	16"	16'-0	48	4	8"	5'-10	2'-5
	5'	12½"	8"	12"	6'-10	12"	13'-8	142	6	16"	23'-8	4'-7	2'-1	9½"	3'-1	3'-7	6	16"	20'-9	6	16"	16'-0	48	4	8"	6'-4	2'-5
	6'	12½"	8"	12"	7'-10	12"	15'-8	156	5	12"	23'-8	4'-7	2'-1	9½"	3'-1	3'-7	5	12"	20'-9	5	12"	16'-0	48	4	6"	6'-10	2'-5
	7'	12½"	8"	12"	8'-10	12"	17'-8	170	5	12"	23'-8	4'-7	2'-1	9½"	3'-1	3'-7	5	12"	20'-9	5	12"	16'-0	48	4	6"	7'-4	2'-5
8'	3'	16"	9"	12"	5'-5	12"	11'-0	128	7	16"	31'-4	6'-1	2'-7	1'-1	4'-2	4'-7	4	16"	27'-0	7	16"	21'-0	60	5	8"	6'-0	2'-7
	4'	16"	9"	12"	6'-5	12"	13'-0	142	7	16"	31'-4	6'-1	2'-7	1'-1	4'-2	4'-7	4	16"	27'-0	7	16"	21'-0	60	5	8"	6'-6	2'-7
	5'	16"	9"	12"	7'-5	12"	15'-0	142	6	12"	31'-4	6'-1	2'-7	1'-1	4'-2	4'-7	4	12"	27'-0	6	12"	21'-0	60	4	6"	6'-9	2'-6
	6'	16"	9"	12"	8'-5	12"	17'-0	156	6	12"	31'-4	6'-1	2'-7	1'-1	4'-2	4'-7	4	12"	27'-0	6	12"	21'-0	60	4	6"	7'-3	2'-6
	7'	16"	9"	12"	9'-5	12"	19'-0	170	6	12"	31'-4	6'-1	2'-7	1'-1	4'-2	4'-7	4	12"	27'-0	6	12"	21'-0	60	4	6"	7'-9	2'-6
	8'	16"	9"	12"	10'-5	12"	21'-0	170	6	12"	31'-4	6'-1	2'-7	1'-1	4'-2	4'-7	4	12"	27'-0	6	12"	21'-0	60	4	6"	8'-3	2'-6
10'	3'	19"	11"	12"	5'-11	12"	11'-9	128	7	12"	38'-7	7'-7	3'-3	1'-4	5'-2	5'-3	4	12"	33'-6	7	12"	26'-6	72	5	6"	6'-6	2'-9
	4'	19"	11"	12"	6'-11	12"	13'-9	142	7	12"	38'-7	7'-7	3'-3	1'-4	5'-2	5'-3	4	12"	33'-6	7	12"	26'-6	72	5	6"	7'-0	2'-9
	5'	19"	11"	12"	7'-11	12"	15'-9	142	7	12"	38'-7	7'-7	3'-3	1'-4	5'-2	5'-3	4	12"	33'-6	7	12"	26'-6	72	5	6"	7'-6	2'-9
	6'	19"	11"	12"	8'-11	12"	17'-9	156	7	12"	38'-7	7'-7	3'-3	1'-4	5'-2	5'-3	4	12"	33'-6	7	12"	26'-6	72	5	6"	8'-0	2'-9
	7'	19"	11"	12"	9'-11	12"	19'-9	170	7	12"	38'-7	7'-7	3'-3	1'-4	5'-2	5'-3	4	12"	33'-6	7	12"	26'-6	72	5	6"	8'-6	2'-9
	8'	19"	11"	12"	10'-11	12"	21'-9	170	7	12"	38'-7	7'-7	3'-3	1'-4	5'-2	5'-3	4	12"	33'-6	7	12"	26'-6	72	5	6"	9'-0	2'-9
	9'	19"	11"	12"	11'-11	12"	23'-9	184	7	12"	38'-7	7'-7	3'-3	1'-4	5'-2	5'-3	4	12"	33'-6	7	12"	26'-6	72	5	6"	9'-6	2'-9
	10'	19"	11"	11½"	12'-11	12"	25'-9	198	7	12"	38'-7	7'-7	3'-3	1'-4	5'-2	5'-3	4	12"	33'-6	7	12"	26'-6	72	5	6"	10'-0	2'-9
12'	8'	23"	13"	12"	11'-7	12"	23'-0	170	8	14"	46'-7	9'-1	3'-9	1'-8	6'-2	6'-5	5	14"	40'-0	8	14"	31'-8	84	6	7"	10'-0	3'-5
	9'	23"	13"	12"	12'-7	12"	25'-0	184	8	14"	46'-7	9'-1	3'-9	1'-8	6'-2	6'-5	5	14"	40'-0	8	14"	31'-8	84	6	7"	10'-6	3'-5
	10'	23"	13"	12"	13'-7	12"	27'-0	198	8	14"	46'-7	9'-1	3'-9	1'-8	6'-2	6'-5	5	14"	40'-0	8	14"	31'-8	84	6	7"	11'-0	3'-5
	11'	23"	13"	12"	14'-7	12"	29'-0	198	8	14"	46'-7	9'-1	3'-9	1'-8	6'-2	6'-5	5	14"	40'-0	8	14"	31'-8	84	6	7"	11'-6	3'-5
	12'	23"	13"	9½"	15'-7	12"	31'-0	212	8	14"	46'-7	9'-1	3'-9	1'-8	6'-2	6'-5	6	14"	40'-0	8	14"	31'-8	84	6	7"	12'-0	3'-5

	DESIGN APPROVED J. D. Bard	ARIZONA DEPARTMENT OF TRANSPORTATION HIGHWAYS DIVISION STANDARD DRAWINGS	REVISION 7-88
	APPROVED FOR DISTRIBUTION T. D. Bryant, II	SIX BARREL BOX CULVERT	STANDARD NO. B-02.65

CADD FILENAME= ZFA
VIEW NAME=

DOUBLE BARREL

Span "S"	Height "H"	Table I Concrete C.Y.	Table I Reinf. Steel Lbs.	Table II Concrete C.Y.	Table II Reinf. Steel Lbs.	Table III Concrete C.Y.	Table III Reinf. Steel Lbs.	Table IV Concrete C.Y.	Table IV Reinf. Steel Lbs.	Table V Concrete C.Y.	Table V Reinf. Steel Lbs.
6'	3	1.172	172.1	1.039	167.5	1.172	177.7	1.305	190.0	1.437	187.7
	4	1.246	183.8	1.113	179.2	1.246	189.8	1.379	202.3	1.511	199.0
	5	1.320	191.6	1.187	187.0	1.320	197.8	1.453	210.7	1.585	206.3
	6	1.394	203.3	1.261	198.7	1.394	209.8	1.527	223.0	1.659	225.1
	7	1.468	224.5	1.335	210.5	1.468	221.8	1.601	235.4	1.734	237.5
8'	3	1.475	261.6	1.590	236.4	1.762	253.5	1.991	256.6	2.221	242.2
	4	1.558	274.9	1.673	248.5	1.845	265.8	2.075	268.9	2.304	253.5
	5	1.642	284.3	1.756	256.5	1.928	274.1	2.158	277.3	2.387	280.5
	6	1.725	297.6	1.840	268.5	2.012	286.5	2.241	289.6	2.471	292.8
	7	1.808	301.3	1.923	280.5	2.095	298.9	2.325	302.0	2.554	305.2
	8	1.892	337.1	2.006	304.5	2.178	307.2	2.408	310.3	2.637	313.5
10'	3	1.965	296.9	2.250	303.7	2.606	325.7	2.891	329.2	3.176	354.8
	4	2.067	310.0	2.352	333.8	2.708	337.8	2.993	341.2	3.278	367.1
	5	2.168	318.4	2.453	323.2	2.810	345.8	3.095	349.3	3.380	375.4
	6	2.270	330.7	2.555	353.9	2.912	357.8	3.197	361.3	3.481	387.8
	7	2.372	355.9	2.657	365.9	3.013	369.9	3.298	373.3	3.583	400.2
	8	2.474	364.9	2.759	373.9	3.115	377.9	3.400	381.3	3.685	408.5
	9	2.576	394.3	2.861	385.9	3.217	389.9	3.502	393.4	3.787	420.8
	10	2.678	410.1	2.963	398.0	3.319	401.9	3.604	405.4	3.889	434.4
12'	8	3.282	456.2	3.708	458.6	4.219	465.8	4.644	495.8	5.070	505.6
	9	3.403	453.7	3.828	471.6	4.339	477.5	4.765	509.1	5.190	519.0
	10	3.523	466.4	3.949	484.6	4.459	523.2	4.885	522.4	5.311	532.3
	11	3.643	523.5	4.069	491.1	4.580	532.5	5.005	536.9	5.431	541.6
	12	3.764	537.7	4.189	538.3	4.700	545.8	5.126	542.1	5.551	584.6

TRIPLE BARREL

Span "S"	Height "H"	Table I Concrete C.Y.	Table I Reinf. Steel Lbs.	Table II Concrete C.Y.	Table II Reinf. Steel Lbs.	Table III Concrete C.Y.	Table III Reinf. Steel Lbs.	Table IV Concrete C.Y.	Table IV Reinf. Steel Lbs.	Table V Concrete C.Y.	Table V Reinf. Steel Lbs.
6'	3	1.687	237.6	1.493	231.1	1.687	244.7	1.882	261.0	2.076	262.9
	4	1.786	252.8	1.592	246.3	1.786	260.2	1.980	276.8	2.175	277.6
	5	1.885	262.6	1.690	256.1	1.885	270.3	2.079	287.2	2.274	287.0
	6	1.984	277.8	1.789	271.3	1.984	285.7	2.178	303.0	2.372	305.8
	7	2.082	305.2	1.888	286.5	2.082	301.2	2.277	318.8	2.471	321.5
8'	3	2.135	358.1	2.303	330.0	2.557	356.4	2.894	360.3	3.231	344.1
	4	2.246	374.9	2.415	348.2	2.668	372.2	3.005	376.1	3.343	358.8
	5	2.357	386.3	2.526	358.4	2.779	382.6	3.116	386.5	3.454	391.2
	6	2.468	403.0	2.637	373.8	2.890	398.4	3.227	402.3	3.565	407.0
	7	2.579	415.4	2.748	389.3	3.001	414.2	3.338	418.0	3.676	422.8
	8	2.690	453.3	2.859	420.9	3.112	424.6	3.450	428.5	3.787	433.2
10'	3	2.851	430.6	3.271	433.3	3.795	464.5	4.215	469.1	4.635	503.4
	4	2.987	446.4	3.406	472.5	3.931	479.9	4.351	484.5	4.771	519.2
	5	3.122	459.1	3.542	458.3	4.067	490.0	4.487	494.7	4.906	529.7
	6	3.258	474.9	3.678	500.0	4.203	505.5	4.622	510.1	5.042	545.4
	7	3.394	504.9	3.814	515.5	4.338	520.9	4.758	525.6	5.178	561.2
	8	3.530	516.0	3.950	525.6	4.474	531.1	4.894	535.7	5.314	571.6
	9	3.666	556.8	4.085	541.0	4.610	546.5	5.030	551.1	5.450	587.4
	10	3.801	574.5	4.221	556.5	4.746	562.0	5.166	566.6	5.585	604.3
12'	8	4.703	646.9	5.330	643.6	6.083	662.3	6.711	695.8	7.338	705.2
	9	4.863	649.1	5.491	660.0	6.244	677.5	6.871	711.7	7.499	722.0
	10	5.024	665.2	5.651	676.4	6.404	726.5	7.032	728.4	7.659	738.7
	11	5.184	733.7	5.812	695.0	6.565	737.9	7.192	745.0	7.820	750.2
	12	5.345	752.3	5.972	745.4	6.725	754.7	7.353	764.1	7.980	806.9

FOUR BARREL

Span "S"	Height "H"	Table I Concrete C.Y.	Table I Reinf. Steel Lbs.	Table II Concrete C.Y.	Table II Reinf. Steel Lbs.	Table III Concrete C.Y.	Table III Reinf. Steel Lbs.	Table IV Concrete C.Y.	Table IV Reinf. Steel Lbs.	Table V Concrete C.Y.	Table V Reinf. Steel Lbs.
6'	3	2.203	305.2	1.947	295.8	2.203	313.9	2.459	334.3	2.715	340.3
	4	2.326	323.8	2.070	314.4	2.326	332.8	2.582	353.5	2.838	358.4
	5	2.450	335.7	2.193	326.3	2.450	345.0	2.706	366.0	2.962	369.9
	6	2.573	354.3	2.317	344.9	2.573	363.9	2.829	385.2	3.085	388.5
	7	2.697	388.1	2.440	363.5	2.697	382.8	2.953	404.4	3.209	407.7
8'	3	2.794	465.8	3.017	431.4	3.351	461.5	3.797	466.4	4.242	447.4
	4	2.933	486.0	3.156	450.3	3.490	480.7	3.936	485.6	4.381	465.6
	5	3.072	499.5	3.295	462.5	3.629	493.2	4.075	498.1	4.520	504.1
	6	3.211	518.8	3.434	481.3	3.768	512.4	4.213	517.3	4.659	523.3
	7	3.350	541.0	3.573	500.2	3.907	531.6	4.352	536.5	4.798	542.5
	8	3.489	581.0	3.712	539.7	4.046	544.2	4.491	549.1	4.937	555.0
10'	3	3.737	542.2	4.291	564.9	4.985	605.5	5.539	611.2	6.094	655.6
	4	3.907	561.5	4.461	615.2	5.154	624.3	5.709	630.1	6.263	674.8
	5	4.076	578.5	4.631	595.5	5.324	636.5	5.879	642.3	6.433	687.3
	6	4.246	597.7	4.801	648.2	5.494	655.4	6.048	661.2	6.603	706.5
	7	4.416	632.1	4.970	667.1	5.664	674.3	6.218	680.0	6.773	725.7
	8	4.586	645.2	5.140	679.3	5.833	686.5	6.388	692.2	6.942	738.2
	9	4.755	698.3	5.310	698.2	6.003	705.4	6.558	711.1	7.112	757.4
	10	4.925	717.3	5.480	717.1	6.173	724.9	6.727	730.0	7.282	777.8
12'	8	6.123	819.9	6.953	831.8	7.948	860.9	8.778	895.4	9.607	907.0
	9	6.324	826.6	7.153	851.6	8.149	879.5	8.978	915.6	9.808	927.2
	10	6.524	846.1	7.354	871.4	8.349	931.2	9.179	935.8	10.008	947.3
	11	6.725	926.2	7.555	901.1	8.550	944.7	9.379	954.4	10.209	960.8
	12	6.926	947.3	7.755	954.2	8.751	964.9	9.580	988.5	10.409	1032.1

FIVE BARREL

Span "S"	Height "H"	Table I Concrete C.Y.	Table I Reinf. Steel Lbs.	Table II Concrete C.Y.	Table II Reinf. Steel Lbs.	Table III Concrete C.Y.	Table III Reinf. Steel Lbs.	Table IV Concrete C.Y.	Table IV Reinf. Steel Lbs.	Table V Concrete C.Y.	Table V Reinf. Steel Lbs.
6'	3	2.718	369.1	2.400	364.3	2.718	386.4	3.036	411.2	3.354	421.8
	4	2.866	391.1	2.548	386.3	2.866	408.7	3.184	433.9	3.502	443.4
	5	3.014	405.1	2.697	400.3	3.014	423.0	3.332	448.5	3.650	457.0
	6	3.163	427.1	2.845	422.3	3.163	445.3	3.480	471.1	3.798	475.1
	7	3.311	467.6	2.993	444.3	3.311	467.6	3.629	493.7	3.947	497.7
8'	3	3.454	567.4	3.731	535.9	4.146	573.2	4.700	578.9	5.253	557.7
	4	3.621	591.0	3.898	558.1	4.313	595.9	4.866	601.5	5.420	579.3
	5	3.788	606.6	4.064	572.4	4.479	610.5	5.033	616.1	5.586	623.2
	6	3.954	630.2	4.231	594.7	4.646	633.1	5.200	638.8	5.753	645.8
	7	4.121	661.4	4.398	617.0	4.813	655.7	5.366	661.4	5.920	668.4
	8	4.288	702.8	4.564	664.8	4.979	670.3	5.533	676.0	6.086	683.0
10'	3	4.623	685.6	5.140	705.8	6.174	756.5	6.863	763.1	7.552	820.4
	4	4.827	708.3	5.516	768.0	6.378	778.8	7.067	785.4	7.756	843.0
	5	5.030	730.0	5.720	741.9	6.581	793.0	7.271	799.6	7.960	857.6
	6	5.234	752.6	5.923	806.5	6.785	815.3	7.474	821.9	8.164	880.2
	7	5.438	792.7	6.127	828.8	6.989	837.6	7.678	844.2	8.367	902.8
	8	5.641	808.0	6.331	843.1	7.192	851.9	7.882	858.5	8.571	917.4
	9	5.845	872.4	6.534	865.4	7.396	874.2	8.085	880.8	8.775	940.1
	10	6.049	894.1	6.738	887.7	7.600	896.5	8.289	903.1	8.978	963.9
12'	8	7.544	1025.0	8.575	1031.1	9.815	1072.9	10.844	1109.2	11.876	1122.1
	9	7.784	1037.5	8.816	1054.4	10.053	1095.0	11.085	1132.8	12.116	1145.7
	10	8.025	1060.4	9.057	1077.6	10.294	1150.9	11.326	1156.4	12.357	1169.3
	11	8.266	1151.9	9.297	1120.8	10.535	1166.5	11.566	1177.1	12.598	1184.9
	12	8.507	1176.3	9.538	1178.5	10.776	1190.1	11.807	1227.3	12.838	1269.7

SIX BARREL

Span "S"	Height "H"	Table I Concrete C.Y.	Table I Reinf. Steel Lbs.	Table II Concrete C.Y.	Table II Reinf. Steel Lbs.	Table III Concrete C.Y.	Table III Reinf. Steel Lbs.	Table IV Concrete C.Y.	Table IV Reinf. Steel Lbs.	Table V Concrete C.Y.	Table V Reinf. Steel Lbs.
6'	3	3.234	431.8	2.854	415.4	3.234	439.6	3.613	467.0	3.993	481.4
	4	3.406	457.2	3.027	440.9	3.406	465.3	3.786	493.0	4.166	506.4
	5	3.579	473.3	3.200	457.0	3.579	481.7	3.959	509.7	4.338	522.1
	6	3.752	498.8	3.372	482.4	3.752	507.4	4.132	535.7	4.511	541.3
	7	3.925	545.3	3.545	507.9	3.925	533.1	4.305	561.8	4.684	567.3
8'	3	4.114	679.4	4.445	609.6	4.941	650.2	5.602	656.3	6.264	634.1
	4	4.308	706.4	4.639	635.3	5.135	676.2	5.797	682.4	6.458	659.1
	5	4.503	724.0	4.834	651.7	5.330	692.9	5.991	699.1	6.653	709.0
	6	4.697	751.1	5.028	677.4	5.524	718.9	6.186	725.1	6.847	735.1
	7	4.892	790.1	5.222	703.1	5.719	745.0	6.380	751.2	7.042	761.1
	8	5.086	834.3	5.417	756.6	5.913	761.7	6.575	767.8	7.236	777.8
10'	3	5.509	816.5	6.333	801.8	7.363	857.8	8.187	864.3	9.011	926.5
	4	5.747	842.6	6.571	873.6	7.601	883.5	8.425	890.0	9.249	952.6
	5	5.984	868.7	6.808	843.3	7.838	899.9	8.663	906.4	9.487	969.3
	6	6.222	894.7	7.046	916.3	8.076	925.6	8.900	932.1	9.724	995.3
	7	6.460	939.5	7.284	942.1	8.314	951.3	9.138	957.8	9.962	1021.3
	8	6.697	956.9	7.521	958.4	8.551	967.7	9.376	974.2	10.200	1038.0
	9	6.935	1032.7	7.759	984.1	8.789	993.4	9.613	999.9	10.437	1064.1
	10	7.173	1056.3	7.997	1009.9	9.027	1019.8	9.851	1025.6	10.675	1091.3
12'	8	8.964	1208.2	10.198	1172.8	11.677	1220.8	12.911	1257.4	14.144	1270.0
	9	9.245	1225.6	10.478	1199.5	11.958	1246.3	13.192	1284.4	14.425	1297.1
	10	9.526	1252.0	10.759	1226.2	12.239	1305.6	13.472	1311.4	14.706	1324.1
	11	9.807	1354.6	11.040	1277.5	12.520	1323.3	13.753	1334.3	14.987	1341.0
	12	10.088	1382.5	11.321	1339.2	12.801	1350.3	14.034	1395.4	15.267	1440.3

NOTE:

Quantities shown in tables are per lin. foot of culvert length.

	DESIGN APPROVED	ARIZONA DEPARTMENT OF TRANSPORTATION HIGHWAYS DIVISION STANDARD DRAWINGS	REVISION
	APPROVED FOR DISTRIBUTION	CULVERT QUANTITIES	STANDARD NO. B-02.70

CADD FILENAME= 2FA
VIEW NAME=

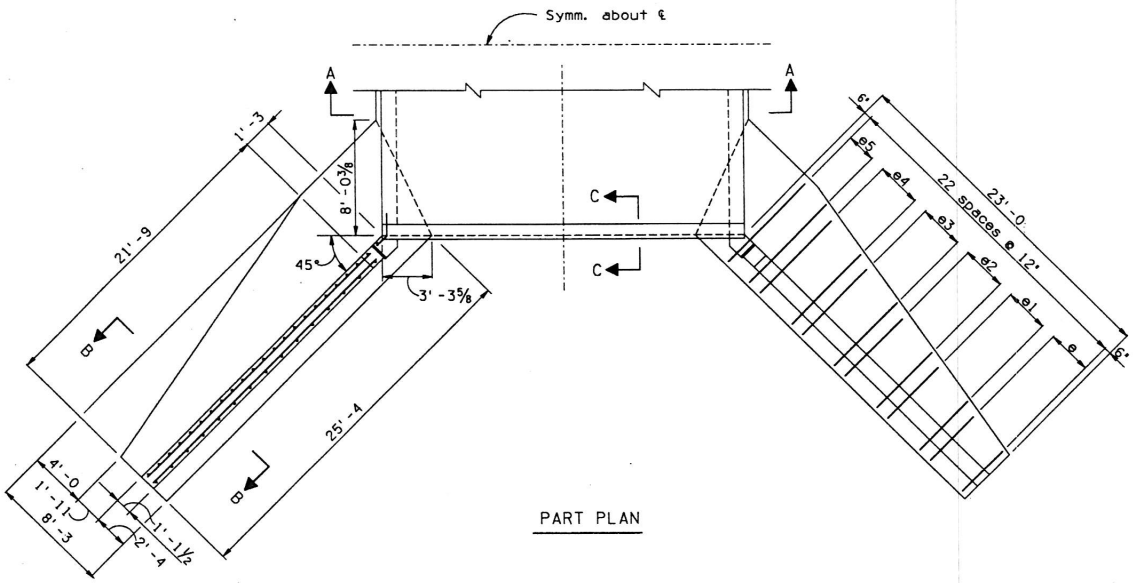

PART PLAN

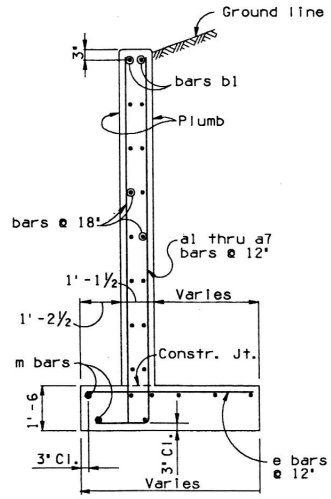

SECTION B-B

BARREL STEEL LIST					
FILL		TABLE I 0' to 5'	TABLE II 5' to 10'	TABLE III 10' to 15'	TABLE IV 15' to 20'
Slab (T)		14 1/2"	17"	20"	22"
Walls (W)		12"	13"	14"	16"
Bars aa(spa)		12"	11"	10 1/2"	6"
Bars cc(No.)		56	56	56	56
Bars ee	Size	#10	#9	#10	#10
	Spacing	9"	6"	7"	6 1/2"
	Length	17'-8	17'-10	18'-0	18'-4
Bars gg (No.)		38	24	24	24
Bars hh	Size	#7	#8	#7	#7
	Spacing	9"	8 1/2"	8 1/2"	8 1/2"
	Length	12'-10	13'-10	13'-4	13'-9"
	F	4'-1	4'-10	4'-1	4'-4
BARREL QUANTITIES					
Steel #/Lf		439	541	511	570
Conc. CY/Lf		2.687	3.074	3.524	3.972

HEAD WALL STEEL LIST									
Mark	Bend	Size	No.	Lgth.	Mark	Bend	Size	No.	Lgth.
a	A	#5	6	10'-9	b	B	#4	20	2'-9
a1	A	#5	6	11'-9	b1	str.	#6	4	22'-9
a2	A	#5	6	12'-9	b2	str.	#4	20	21'-6
a3	A	#6	6	13'-9	b3	str.	#4	4	18'-6
a4	A	#6	6	14'-9	b4	str.	#4	4	14'-6
a5	A	#6	6	16'-0	b5	str.	#4	4	10'-6
a6	A	#6	6	17'-0	b6	str.	#4	4	6'-0
a7	A	#7	4	18'-3	e	str.	#5	8	3'-9
a8	str.	#8	16	7'-3	e1	str.	#5	8	4'-6
a9	str.	#6	16	5'-3	e2	str.	#6	8	5'-3
a10	str.	#4	6	8'-9	e3	str.	#7	8	6'-0
a11	str.	#4	6	10'-3	e4	str.	#8	8	6'-9
a12	str.	#4	6	11'-9	e5	str.	#9	6	7'-3
a13	str.	#4	6	13'-3	CURB				
a14	str.	#4	6	15'-0	h	str.	#8	4	17'-6
m	str.	#4	16	22'-6	j	J	#4	12	4'-4
HEAD WALL QUANTITIES									
Steel									3173 Lbs
Conc.									41.5 CY

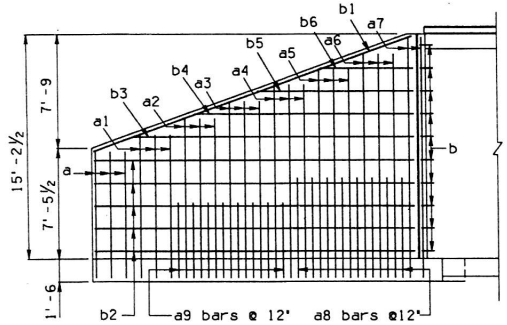

WING ELEVATION
(Back Face Reinf.)

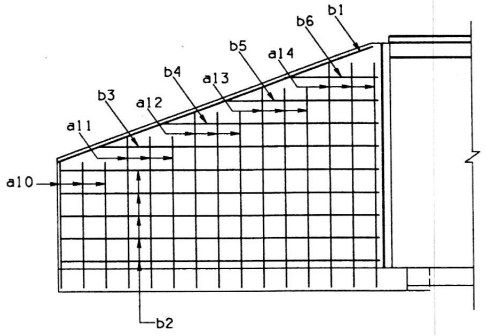

WING ELEVATION
(Front Face Reinf.)

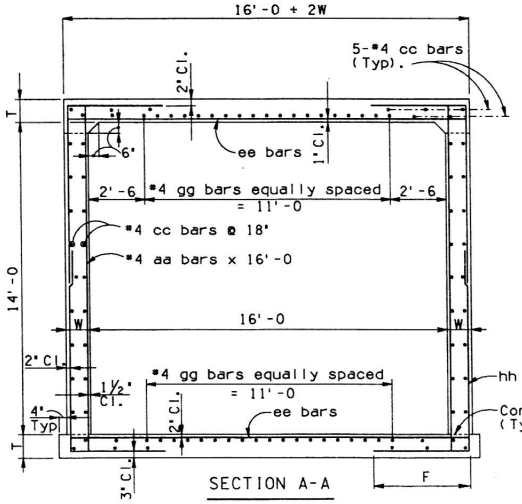

SECTION A-A

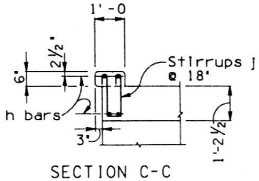

SECTION C-C

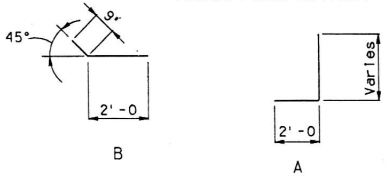

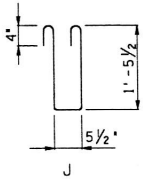

BENDS

NOTE:
For General Notes and Miscellaneous Details, see Std. B-01.10.
Use Table No. 1 next to headwall.

DESIGN APPROVED J. D. Davis	ARIZONA DEPARTMENT OF TRANSPORTATION HIGHWAYS DIVISION STANDARD DRAWINGS	REVISION 7-88	
APPROVED FOR DISTRIBUTION T. A. Bryant, II.	16' x 14' EQUIPMENT PASS	STANDARD NO. B-03.10	

CADD FILENAME= 2FA
VIEW NAME=

Skew ∡	Θ_1	Θ_2
0°	70°	70°
5°	75°	65°
10°	80°	60°
15°	85°	55°
20°	90°	50°

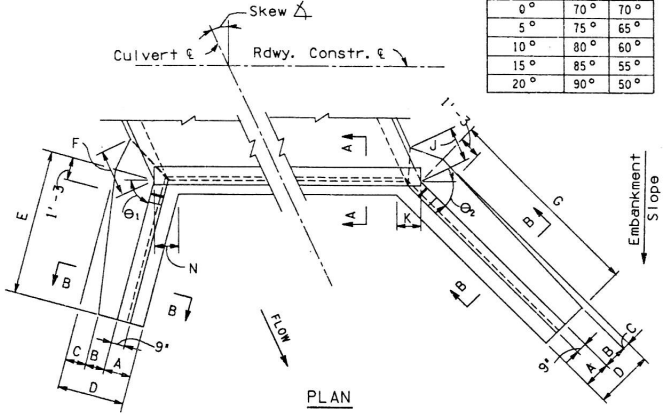

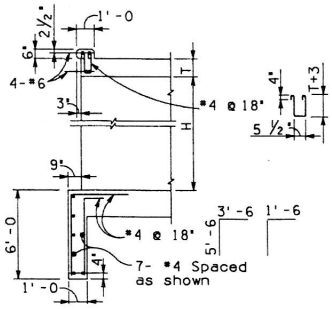

SECTION A-A

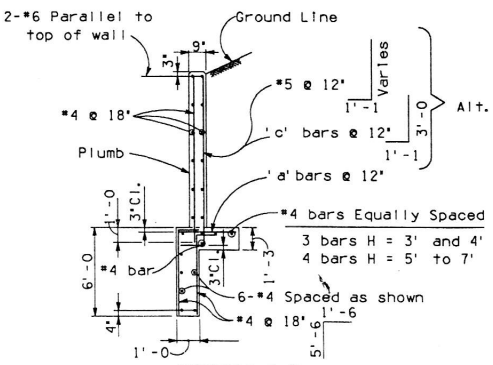

SECTION B-B

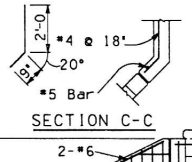

SECTION C-C

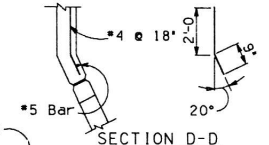

SECTION D-D

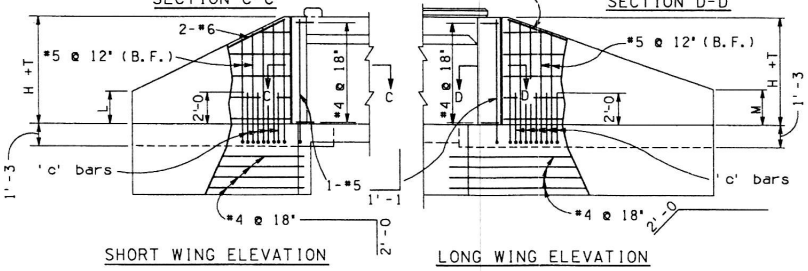

SHORT WING ELEVATION

LONG WING ELEVATION

Skew ∡	0°					5°					10°					15°					20°				
Height H	3'	4'	5'	6'	7'	3'	4'	5'	6'	7'	3'	4'	5'	6'	7'	3'	4'	5'	6'	7'	3'	4'	5'	6'	7'
2 : 1 Slope Dimensions																									
A	1'-6	1'-6	1'-6	1'-6	1'-6	1'-6	1'-6	1'-6	1'-6	1'-6	1'-6	1'-6	1'-6	1'-6	1'-6	1'-6	1'-6	1'-6	1'-6	1'-6	1'-6	1'-6	1'-6	1'-6	1'-6
B	9"	1'-0	1'-1	1'-2	1'-3	9"	1'-0	1'-1	1'-2	1'-3	9"	1'-0	1'-1	1'-2	1'-3	9"	1'-0	1'-1	1'-2	1'-3	9"	1'-0	1'-1	1'-2	1'-3
C	4"	7"	1'-0	1'-5	1'-10	4"	7"	1'-0	1'-5	1'-10	5"	8"	1'-1	1'-6	1'-11	5"	8"	1'-1	1'-7	2'-0	6"	9"	1'-2	1'-7	2'-1
D	2'-7	3'-1	3'-7	4'-1	4'-7	2'-7	3'-1	3'-7	4'-1	4'-7	2'-8	3'-2	3'-8	4'-2	4'-8	2'-8	3'-2	3'-8	4'-3	4'-9	2'-9	3'-3	3'-9	4'-3	4'-10
E	6'-6	8'-0	9'-6	11'-0	12'-6	6'-6	8'-0	9'-6	11'-0	12'-6	6'-6	8'-0	9'-6	11'-0	12'-6	6'-0	7'-6	9'-0	10'-6	12'-0	6'-0	7'-6	9'-0	10'-6	12'-0
F	1'-1	1'-9	2'-4	3'-0	3'-8	1'-1	1'-9	2'-4	3'-0	3'-8	1'-2	1'-10	2'-6	3'-1	3'-9	1'-2	1'-10	2'-6	3'-3	3'-10	1'-3	1'-11	2'-7	3'-3	4'-0
G	6'-6	8'-0	9'-6	11'-0	12'-6	6'-6	8'-0	10'-0	11'-6	13'-0	7'-0	8'-6	10'-0	12'-0	13'-6	7'-0	9'-0	10'-6	12'-6	14'-0	7'-6	9'-6	11'-0	13'-0	14'-6
J	1'-1	1'-9	2'-4	3'-0	3'-8	1'-1	1'-9	2'-4	3'-0	3'-8	1'-2	1'-10	2'-6	3'-1	3'-9	1'-2	1'-10	2'-6	3'-3	3'-10	1'-3	1'-11	2'-7	3'-3	4'-0
K	1'-3⅞	1'-3⅞	1'-3⅞	1'-3⅞	1'-3⅞	1'-3⅝	1'-3⅝	1'-3⅝	1'-3⅝	1'-3⅝	1'-3⅝	1'-3⅝	1'-3⅝	1'-3⅝	1'-3⅝	1'-3⅝	1'-3⅝	1'-3⅝	1'-3⅝	1'-3⅝	1'-4	1'-4	1'-4	1'-4	1'-4
L	1'-0	1'-4	1'-7	1'-11	2'-2	11"	1'-2	1'-6	1'-9	2'-0	10"	1'-1	1'-5	1'-8	1'-11	1'-1	1'-4	1'-7	1'-10	2'-1	1'-1	1'-4	1'-7	1'-10	2'-1
M	1'-0	1'-4	1'-7	1'-11	2'-2	1'-1	1'-5	1'-6	1'-10	2'-2	1'-0	1'-5	1'-9	1'-10	2'-3	1'-2	1'-5	1'-9	1'-11	2'-4	1'-2	1'-5	1'-10	2'-1	2'-6
N	1'-3⅞	1'-3⅞	1'-3⅞	1'-3⅞	1'-3⅞	1'-4¼	1'-4¼	1'-4¼	1'-4¼	1'-¼	1'-4¾	1'-4¾	1'-4¾	1'-4¾	1'-4¾	1'-5¼	1'-5¼	1'-5¼	1'-5¼	1'-5¼	1'-6	1'-6	1'-6	1'-6	1'-6

Skew ∡	0°					5°					10°					15°					20°				
Height H	3'	4'	5'	6'	7'	3'	4'	5'	6'	7'	3'	4'	5'	6'	7'	3'	4'	5'	6'	7'	3'	4'	5'	6'	7'
4 : 1 Slope Dimensions																									
A	1'-6	1'-6	1'-6	1'-6	1'-6	1'-6	1'-6	1'-6	1'-6	1'-6	1'-6	1'-6	1'-6	1'-6	1'-6	1'-6	1'-6	1'-6	1'-6	1'-6	1'-6	1'-6	1'-6	1'-6	1'-6
B	9"	1'-0	1'-1	1'-2	1'-3	9"	1'-0	1'-1	1'-2	1'-3	9"	1'-0	1'-1	1'-2	1'-3	9"	1'-0	1'-1	1'-2	1'-3	9"	1'-0	1'-1	1'-2	1'-3
C	4"	6"	11"	1'-4	1'-8	3"	6"	11"	1'-4	1'-9	3"	6"	11"	1'-4	1'-9	3"	6"	11"	1'-4	1'-9	3"	7"	1'-0	1'-5	1'-10
D	2'-7	3'-0	3'-6	4'-0	4'-5	2'-6	3'-0	3'-6	4'-0	4'-6	2'-6	3'-0	3'-6	4'-0	4'-6	2'-6	3'-0	3'-6	4'-0	4'-6	2'-6	3'-1	3'-7	4'-1	4'-7
E	10'-0	12'-6	15'-0	17'-6	20'-0	10'-0	12'-6	15'-0	17'-0	19'-6	10'-0	12'-6	14'-6	17'-0	19'-6	10'-0	12'-0	14'-6	17'-0	19'-6	10'-0	12'-0	14'-6	17'-0	19'-6
F	1'-0	1'-7	2'-3	2'-11	3'-5	1'-0	1'-7	2'-3	2'-11	3'-6	1'-0	1'-7	2'-3	2'-11	3'-6	1'-0	1'-7	2'-3	2'-11	3'-6	1'-0	1'-9	2'-4	3'-0	3'-8
G	10'-0	12'-6	15'-0	17'-6	20'-0	10'-6	13'-0	15'-6	18'-0	20'-6	10'-6	13'-0	16'-0	18'-6	21'-0	11'-0	13'-6	16'-0	19'-0	21'-6	11'-6	14'-0	17'-0	19'-6	22'-6
J	1'-0	1'-7	2'-3	2'-11	3'-5	1'-0	1'-7	2'-3	2'-11	3'-6	1'-0	1'-7	2'-3	2'-11	3'-6	1'-0	1'-7	2'-3	2'-11	3'-6	1'-0	1'-9	2'-4	3'-0	3'-8
K	1'-3⅞	1'-3⅞	1'-3⅞	1'-3⅞	1'-3⅞	1'-3⅝	1'-3⅝	1'-3⅝	1'-3⅝	1'-3⅝	1'-3⅝	1'-3⅝	1'-3⅝	1'-3⅝	1'-3⅝	1'-3⅝	1'-3⅝	1'-3⅝	1'-3⅝	1'-3⅝	1'-4	1'-4	1'-4	1'-4	1'-4
L	1'-9	2'-2	2'-6	2'-11	3'-4	1'-8	2'-1	2'-5	2'-11	3'-4	1'-7	2'-0	2'-6	2'-11	3'-3	1'-7	2'-1	2'-5	2'-10	3'-2	1'-7	2'-1	2'-5	2'-10	3'-2
M	1'-9	2'-2	2'-6	2'-11	3'-4	1'-8	2'-1	2'-7	3'-0	3'-5	1'-9	2'-3	2'-7	3'-1	3'-6	1'-10	2'-4	2'-9	3'-2	3'-8	1'-10	2'-5	2'-10	3'-4	3'-9
N	1'-3⅞	1'-3⅞	1'-3⅞	1'-3⅞	1'-3⅞	1'-4¼	1'-4¼	1'-4¼	1'-4¼	1'-4¼	1'-4¾	1'-4¾	1'-4¾	1'-4¾	1'-4¾	1'-5¼	1'-5¼	1'-5¼	1'-5¼	1'-5¼	1'-6	1'-6	1'-6	1'-6	1'-6

Skew ∡	0°					5°					10°					15°					20°				
Height H	3'	4'	5'	6'	7'	3'	4'	5'	6'	7'	3'	4'	5'	6'	7'	3'	4'	5'	6'	7'	3'	4'	5'	6'	7'
6 : 1 Slope Dimensions																									
A	1'-6	1'-6	1'-6	1'-6	1'-6	1'-6	1'-6	1'-6	1'-6	1'-6	1'-6	1'-6	1'-6	1'-6	1'-6	1'-6	1'-6	1'-6	1'-6	1'-6	1'-6	1'-6	1'-6	1'-6	1'-6
B	9"	1'-0	1'-1	1'-2	1'-3	9"	1'-0	1'-1	1'-2	1'-3	9"	1'-0	1'-1	1'-2	1'-3	9"	1'-0	1'-1	1'-2	1'-3	9"	1'-0	1'-1	1'-2	1'-3
C	3"	6"	11"	1'-4	1'-8	3"	6"	11"	1'-4	1'-8	3"	6"	11"	1'-4	1'-8	3"	6"	11"	1'-4	1'-9	3"	6"	11"	1'-4	1'-9
D	2'-6	3'-0	3'-6	4'-0	4'-5	2'-6	3'-0	3'-6	4'-0	4'-5	2'-6	3'-0	3'-6	4'-0	4'-5	2'-6	3'-0	3'-6	4'-0	4'-6	2'-6	3'-0	3'-6	4'-0	4'-6
E	12'-6	15'-6	18'-6	21'-6	24'-6	12'-6	15'-6	18'-6	21'-6	24'-6	12'-0	15'-0	18'-0	21'-0	24'-0	12'-0	15'-0	18'-0	21'-0	24'-0	12'-0	15'-0	18'-0	21'-0	24'-0
F	1'-0	1'-7	2'-3	2'-11	3'-5	1-0	1'-7	2'-3	2'-11	3'-5	1'-0	1'-7	2'-3	2'-11	3'-5	1'-0	1'-7	2'-3	2'-11	3'-6	1'-0	1'-7	2'-3	2'-11	3'-6
G	12'-6	15'-6	18'-6	21'-6	24'-6	12'-6	16'-0	19'-0	22'-0	25'-0	13'-0	16'-0	19'-6	22'-6	25'-6	13'-6	16'-6	20'-0	23'-0	26'-6	13'-6	17'-0	20'-6	23'-6	27'-0
J	1'-0	1'-7	2'-3	2'-11	3'-5	1'-0	1'-7	2'-3	2'-11	3'-5	1'-0	1'-7	2'-3	2'-11	3'-5	1'-0	1'-7	2'-3	2'-11	3'-6	1'-0	1'-7	2'-3	2'-11	3'-6
K	1'-3⅞	1'-3⅞	1'-3⅞	1'-3⅞	1'-3⅞	1'-3⅝	1'-3⅝	1'-3⅝	1'-3⅝	1'-3⅝	1'-3⅝	1'-3⅝	1'-3⅝	1'-3⅝	1'-3⅝	1'-3⅝	1'-3⅝	1'-3⅝	1'-3⅝	1'-3⅝	1'-4	1'-4	1'-4	1'-4	1'-4
L	2'-1	2'-8	3'-2	3'-8	4'-3	2'-1	2'-7	3'-1	3'-7	4'-1	2'-1	2'-7	3'-1	3'-7	4'-1	2'-1	2'-7	3'-1	3'-7	4'-1	2'-1	2'-7	3'-1	3'-7	4'-1
M	2'-1	2'-8	3'-2	3'-8	4'-3	2'-2	2'-8	3'-2	3'-9	4'-3	2'-2	2'-9	3'-3	3'-10	4'-5	2'-3	2'-10	3'-4	3'-11	4'-5	2'-4	2'-11	3'-5	4'-1	4'-7
N	1'-3⅞	1'-3⅞	1'-3⅞	1'-3⅞	1'-3⅞	1'-4¼	1'-4¼	1'-4¼	1'-4¼	1'-4¼	1'-4¾	1'-4¾	1'-4¾	1'-4¾	1'-4¾	1'-5¼	1'-5¼	1'-5¼	1'-5¼	1'-5¼	1'-6	1'-6	1'-6	1'-6	1'-6

Hgt. H	Slope	'c' bars Short Wing 0° to 10°	'c' bars Long Wing 0° to 20°
7'	2 : 1	3 - *5	3 - *5
	4 : 1	5 - *5	5 - *5

Height H	'a' bars Short Wing 0° to 20°	'a' bars Long Wing 0° & 5°	'a' bars Long Wing 10° to 20°
3'	*4	*4	*4
4'	*4	*4	*4
5'	*4	*4	*4
6'	*4	*4	*5
7'	*4	*4	*6

NOTE :

For General Notes and Miscellaneous Details see B-01.10.
For Headwall Quantities see B-05.10, B-05.20 and B-05.30.

DESIGN APPROVED

APPROVED FOR DISTRIBUTION

ARIZONA
DEPARTMENT OF TRANSPORTATION
HIGHWAYS DIVISION
STANDARD DRAWINGS

OUTLET WINGS
CULVERT HEIGHT 3' to 7'
SKEW 0° to 20°

REVISION 7-88

STANDARD NO. B-04.10

CADD FILENAME= ZFA
VIEW NAME=

Skew ∡	Θ_1	Θ_2
0°	70°	70°
5°	75°	65°
10°	80°	60°
15°	85°	55°
20°	90°	50°

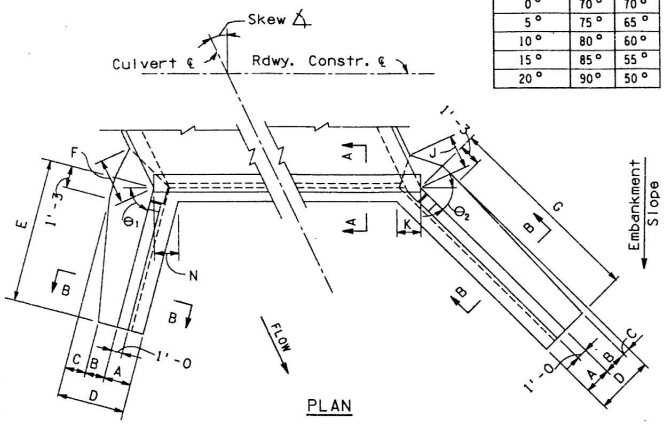

2 : 1 Slope Dimensions	Skew ∡	0°					5°					10°					15°					20°				
	Height H	8'	9'	10'	11'	12'	8'	9'	10'	11'	12'	8'	9'	10'	11'	12'	8'	9'	10'	11'	12'	8'	9'	10'	11'	12'
	A	2'-0	2'-1	2'-2	2'-3	2'-4	2'-0	2'-1	2'-2	2'-3	2'-4	2'-0	2'-1	2'-2	2'-3	2'-4	2'-0	2'-1	2'-2	2'-3	2'-4	2'-0	2'-1	2'-2	2'-3	2'-4
	B	1'-4	1'-5	1'-6	1'-7	1'-8	1'-4	1'-5	1'-6	1'-7	1'-8	1'-4	1'-5	1'-6	1'-7	1'-8	1'-4	1'-5	1'-6	1'-7	1'-8	1'-4	1'-5	1'-6	1'-7	1'-8
	C	1'-10	2'-2	2'-6	3'-0	3'-8	1'-11	2'-3	2'-7	3'-2	3'-10	1'-11	2'-4	2'-8	3'-3	4'-0	2'-0	2'-5	2'-9	3'-5	4'-1	2'-1	2'-6	2'-10	3'-6	4'-3
	D	5'-2	5'-8	6'-2	6'-10	7'-8	5'-3	5'-9	6'-3	7'-0	7'-10	5'-3	5'-10	6'-4	7'-1	8'-0	5'-4	5'-11	6'-5	7'-3	8'-1	5'-5	6'-0	6'-6	7'-4	8'-3
	E	14'-6	16'-0	17'-6	19'-0	20'-6	14'-0	15'-6	17'-0	18'-6	20'-0	14'-0	15'-6	17'-0	18'-6	20'-0	13'-6	15'-0	16'-6	18'-0	19'-6	13'-6	15'-0	16'-6	18'-0	19'-6
	F	3'-9	4'-3	4'-10	5'-7	6'-6	3'-10	4'-5	4'-11	5'-9	6'-9	3'-10	4'-6	5'-0	5'-11	6'-11	4'-0	4'-7	5'-2	6'-1	7'-1	4'-1	4'-9	5'-3	6'-2	7'-3
	G	14'-6	16'-0	17'-6	19'-0	20'-6	14'-6	16'-6	18'-0	19'-6	21'-0	15'-0	17'-0	18'-6	20'-0	22'-0	15'-6	17'-6	19'-0	21'-0	22'-6	16'-6	18'-6	20'-0	22'-0	23'-6
	J	3'-9	4'-3	4'-10	5'-7	6'-6	3'-10	4'-5	4'-11	5'-9	6'-9	3'-10	4'-6	5'-0	5'-11	6'-11	4'-0	4'-7	5'-2	6'-1	7'-1	4'-1	4'-9	5'-3	6'-2	7'-3
	K	1'-10¼	1'-11⅜	2'-0⅜	2'-1½	2'-2½	1'-10¼	1'-11⅜	2'-0½	2'-1⅝	2'-2¾	1'-10½	1'-11⅝	2'-0⅞	2'-2	2'-3⅛	1'-11	2'-0¼	2'-1½	2'-2⅝	2'-3⅞	1'-11¾	2'-1⅛	2'-2⅜	2'-3¾	2'-5
	L	2'-3	2'-7	2'-10	3'-2	3'-5	2'-4	2'-7	2'-10	3'-2	3'-5	2'-2	2'-5	2'-8	2'-11	3'-3	2'-4	2'-7	2'-10	3'-1	3'-4	2'-4	2'-7	2'-10	3'-1	3'-4
	M	2'-3	2'-7	2'-10	3'-2	3'-5	2'-6	2'-7	2'-11	3'-3	3'-7	2'-7	2'-8	3'-1	3'-5	3'-6	2'-9	2'-11	3'-3	3'-6	3'-10	2'-9	3'-0	3'-5	3'-8	4'-1
	N	1'-10¼	1'-11⅜	2'-0⅜	2'-1½	2'-2½	1'-10½	1'-11½	2'-0½	2'-1½	2'-2⅝	1'-10¾	1'-11¾	2'-0⅞	2'-1⅞	2'-2⅞	1'-11¼	2'-0¼	2'-1¼	2'-2⅜	2'-3⅜	2'-0	2'-1	2'-2	2'-3	2'-4

4 : 1 Slope Dimensions	Skew ∡	0°					5°					10°					15°					20°				
	Height H	8'	9'	10'	11'	12'	8'	9'	10'	11'	12'	8'	9'	10'	11'	12'	8'	9'	10'	11'	12'	8'	9'	10'	11'	12'
	A	2'-0	2'-1	2'-2	2'-3	2'-4	2'-0	2'-1	2'-2	2'-3	2'-4	2'-0	2'-1	2'-2	2'-3	2'-4	2'-0	2'-1	2'-2	2'-3	2'-4	2'-0	2'-1	2'-2	2'-3	2'-4
	B	1'-4	1'-5	1'-6	1'-7	1'-8	1'-4	1'-5	1'-6	1'-7	1'-8	1'-4	1'-5	1'-6	1'-7	1'-8	1'-4	1'-5	1'-6	1'-7	1'-8	1'-4	1'-5	1'-6	1'-7	1'-8
	C	1'-8	2'-0	2'-4	2'-10	3'-6	1'-9	2'-1	2'-5	2'-11	3'-6	1'-9	2'-1	2'-5	2'-11	3'-7	1'-9	2'-1	2'-5	3'-0	3'-8	1'-10	2'-2	2'-6	3'-0	3'-8
	D	5'-0	5'-6	6'-0	6'-8	7'-6	5'-1	5'-7	6'-1	6'-9	7'-6	5'-1	5'-7	6'-1	6'-9	7'-7	5'-1	5'-7	6'-1	6'-10	7'-8	5'-2	5'-8	6'-2	6'-10	7'-8
	E	22'-6	25'-0	27'-6	30'-0	32'-6	22'-0	24'-6	27'-0	29'-6	32'-0	22'-0	24'-0	26'-6	29'-0	31'-6	21'-6	24'-0	26'-6	29'-0	31'-0	21'-6	24'-0	26'-6	29'-0	31'-0
	F	3'-6	4'-1	4'-7	5'-4	6'-4	3'-8	4'-2	4'-9	5'-5	6'-4	3'-8	4'-2	4'-9	5'-5	6'-5	3'-8	4'-2	4'-9	5'-7	6'-6	3'-9	4'-3	4'-10	5'-7	6'-6
	G	22'-6	25'-0	27'-6	30'-0	32'-6	23'-0	25'-6	28'-0	30'-6	33'-0	23'-6	26'-0	28'-6	31'-0	34'-0	24'-0	27'-0	29'-6	32'-0	35'-0	25'-0	28'-0	30'-6	33'-6	36'-0
	J	3'-6	4'-1	4'-7	5'-4	6'-4	3'-8	4'-2	4'-9	5'-5	6'-4	3'-8	4'-2	4'-9	5'-5	6'-5	3'-8	4'-2	4'-9	5'-7	6'-6	3'-9	4'-3	4'-10	5'-7	6'-6
	K	1'-10¼	1'-11⅜	2'-0⅜	2'-1½	2'-2½	1'-10¼	1'-11⅜	2'-0½	2'-1⅝	2'-2¾	1'-10½	1'-11⅝	2'-0⅞	2'-2	2'-3⅛	1'-11	2'-0¼	2'-1½	2'-2⅝	2'-3⅞	1'-11¾	2'-1⅛	2'-2⅜	2'-3¾	2'-5
	L	3'-9	4'-2	4'-7	5'-0	5'-5	3'-9	4'-2	4'-7	4'-11	5'-4	3'-8	4'-2	4'-6	4'-11	5'-4	3'-9	4'-1	4'-6	4'-10	5'-4	3'-8	4'-1	4'-5	4'-10	5'-4
	M	3'-9	4'-2	4'-7	5'-0	5'-5	3'-10	4'-3	4'-9	5'-2	5'-7	4'-0	4'-5	4'-11	5'-4	5'-8	4'-2	4'-6	5'-0	5'-6	5'-11	4'-3	4'-8	5'-3	5'-8	6'-2
	N	1'-10¼	1'-11⅜	2'-0⅜	2'-1½	2'-2½	1'-10½	1'-11½	2'-0½	2'-1½	2'-2⅝	1'-10¾	1'-11¾	2'-0⅞	2'-1⅞	2'-2⅞	1'-11¼	2'-0¼	2'-1¼	2'-2⅜	2'-3⅜	2'-0	2'-1	2'-2	2'-3	2'-4

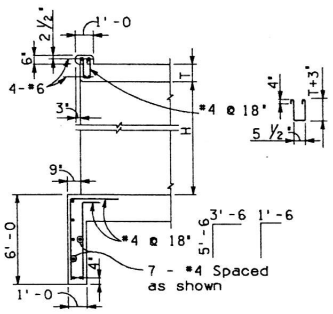

SECTION A-A

6 : 1 Slope Dimensions	Skew ∡	0°	5°	10°	15°	20°
	Height H	8'	8'	8'	8'	8'
	A	2'-0	2'-0	2'-0	2'-0	2'-0
	B	1'-4	1'-4	1'-4	1'-4	1'-4
	C	1'-8	1'-8	1'-8	1'-9	1'-9
	D	5'-0	5'-0	5'-0	5'-1	5'-1
	E	28'-0	27'-6	27'-0	27'-0	27'-0
	F	3'-6	3'-6	3'-6	3'-8	3'-8
	G	28'-0	28'-0	29'-0	29'-6	30'-6
	J	3'-6	3'-6	3'-6	3'-8	3'-8
	K	1'-10¼	1'-10¼	1'-10½	1'-11	1'-11¾
	L	4'-8	4'-8	4'-8	4'-7	4'-7
	M	4'-8	4'-10	4'-11	5'-0	5'-2
	N	1'-10¼	1'-10½	1'-10¾	1'-11¼	2'-0

Height H	'c' Bars: Short Wing Skew ∡ 0°	5°	10°	15°	20°	Long Wing Skew ∡ 0°	5°	10°	15°	20°	Dim 'X'	•'d' Bars: Short Wing 0° to 10°	15° & 20°	Long Wing 0° to 20°
2:1 Slope 8'	2-#5	2-#5	2-#5	-	-	2-#5	2-#5	2-#5	3-#5	3-#5	2'-0	-	-	-
9'	4-#5	4-#5	4-#5	3-#5	2-#5	4-#5	4-#5	4-#5	5-#5	5-#5	3'-0	-	-	-
10'	6-#6	6-#6	5-#6	5-#6	4-#6	6-#6	7-#6	7-#6	7-#6	8-#6	4'-3	-	-	-
11'	8-#7	8-#7	7-#7	6-#7	6-#7	8-#7	9-#7	9-#7	10-#7	10-#7	6'-9	5-#6	4-#6	5-#6
12'	9-#7	8-#7	7-#7	6-#7	6-#7	9-#7	9-#7	9-#7	10-#7	10-#7	6'-9	8-#6	6-#6	8-#6
4:1 Slope 9'	6-#5	6-#5	5-#5	4-#5	3-#5	6-#5	6-#5	6-#5	7-#5	7-#5	3'-0	-	-	-
10'	10-#5	10-#5	9-#5	8-#5	7-#5	10-#5	10-#5	11-#5	11-#5	12-#5	4'-0	-	-	-
11'	14-#6	14-#6	13-#6	12-#6	12-#6	14-#6	15-#6	15-#6	16-#6	17-#6	5'-3	9-#6	8-#6	10-#6
12'	14-#7	14-#7	13-#7	12-#7	11-#7	14-#7	14-#7	15-#7	16-#7	17-#7	6'-9	13-#6	12-#6	15-#6

• 'd' bars alternate with 'a' bars at high end of wall.

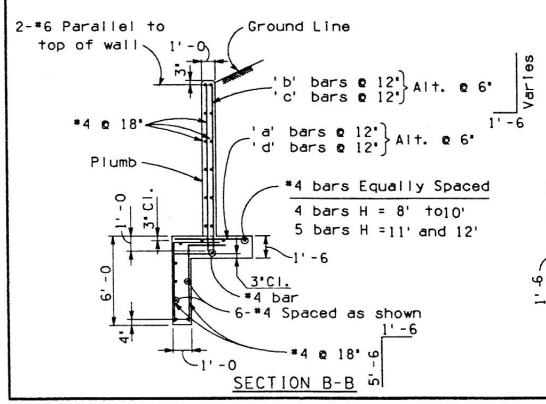

SECTION B-B

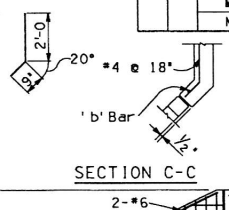

SECTION C-C

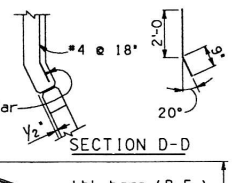

SECTION D-D

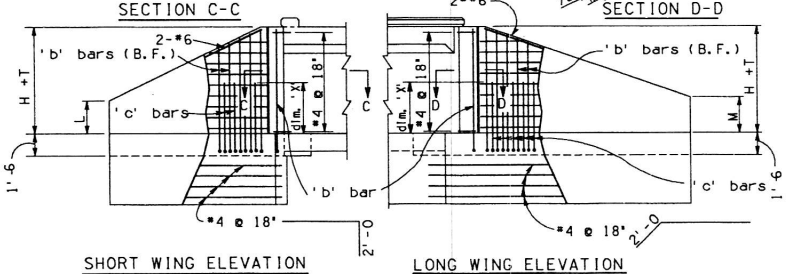

SHORT WING ELEVATION

LONG WING ELEVATION

Height H	'a' bars	'b' bars
8'	#5	#5
9'	#5	#5
10'	#6	#5
11'	#5	#5
12'	#6	#6

NOTE :

For General Notes and Miscellaneous Details see B-01.10.
For Headwall Quantities see B-05.10, B-05.20 and B-05.30.

DESIGN APPROVED	ARIZONA DEPARTMENT OF TRANSPORTATION HIGHWAYS DIVISION STANDARD DRAWINGS	REVISION 7-88
APPROVED FOR DISTRIBUTION	OUTLET WINGS CULVERT HEIGHT 8' to 12' SKEW 0° to 20°	STANDARD NO. B-04.20

CADD FILENAME= ZFA
VIEW NAME=

Skew ∡	θ_1
0°	45°
5°	55°
10°	65°
15°	75°
20°	85°

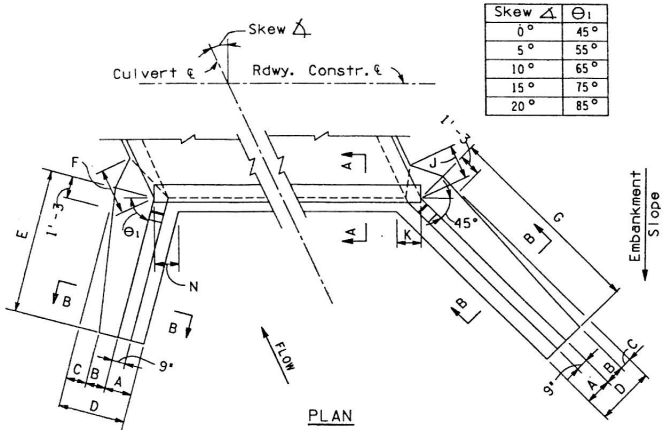

PLAN

2 : 1 Slope	Skew ∡	0°					5°					10°					15°					20°				
	Height H	3'	4'	5'	6'	7'	3'	4'	5'	6'	7'	3'	4'	5'	6'	7'	3'	4'	5'	6'	7'	3'	4'	5'	6'	7'
Dimensions	A	1'-6	1'-6	1'-6	1'-6	1'-6	1'-6	1'-6	1'-6	1'-6	1'-6	1'-6	1'-6	1'-6	1'-6	1'-6	1'-6	1'-6	1'-6	1'-6	1'-6	1'-6	1'-6	1'-6	1'-6	1'-6
	B	9"	1'-0	1'-1	1'-2	1'-3	9"	1'-0	1'-1	1'-2	1'-3	9"	1'-0	1'-1	1'-2	1'-3	9"	1'-0	1'-1	1'-2	1'-3	9"	1'-0	1'-1	1'-2	1'-3
	C	6"	9"	1'-3	1'-8	2'-1	6"	9"	1'-3	1'-8	2'-1	6"	9"	1'-3	1'-8	2'-1	6"	9"	1'-3	1'-8	2'-1	6"	9"	1'-3	1'-8	2'-1
	D	2'-9	3'-3	3'-10	4'-4	4'-10	2'-9	3'-3	3'-10	4'-4	4'-10	2'-9	3'-3	3'-10	4'-4	4'-10	2'-9	3'-3	3'-10	4'-4	4'-10	2'-9	3'-3	3'-10	4'-4	4'-10
	E	6'-0	7'-6	8'-6	10'-0	11'-6	5'-6	7'-0	8'-6	10'-0	11'-0	5'-6	7'-0	8'-6	9'-6	11'-0	5'-6	7'-0	8'-6	10'-0	11'-0	6'-0	7'-6	8'-6	10'-0	11'-6
	F	1'-5	2'-2	3'-0	3'-8	4'-5	1'-5	2'-2	3'-0	3'-8	4'-5	1'-5	2'-2	2'-11	3'-8	4'-4	1'-5	2'-1	2'-11	3'-7	4'-3	1'-4	2'-0	2'-9	3'-5	4'-1
	G	6'-0	7'-6	8'-6	10'-0	11'-6	6'-0	7'-6	9'-6	10'-6	12'-0	6'-6	8'-0	9'-6	11'-0	12'-6	7'-0	8'-6	10'-0	12'-0	13'-6	7'-6	9'-0	11'-0	12'-6	14'-6
	J	1'-5	2'-2	3'-0	3'-8	4'-5	1'-5	2'-2	3'-0	3'-8	4'-5	1'-5	2'-2	2'-11	3'-8	4'-4	1'-5	2'-1	2'-11	3'-7	4'-3	1'-4	2'-0	2'-9	3'-5	4'-1
	K	1'-4½	1'-4½	1'-4½	1'-4½	1'-4½	1'-4½	1'-4½	1'-4½	1'-4½	1'-4½	1'-4½	1'-4½	1'-4½	1'-4½	1'-4½	1'-4½	1'-4½	1'-4½	1'-4½	1'-4½	1'-4½	1'-4½	1'-4½	1'-4½	1'-4½
	L	1'-11	2'-5	3'-1	3'-6	4'-0	1'-10	2'-2	2'-5	3'-0	3'-7	1'-7	1'-11	2'-3	2'-9	3'-1	1'-5	1'-8	1'-11	2'-3	2'-9	1'-1	1'-4	1'-10	2'-1	2'-4
	M	1'-11	2'-5	3'-1	3'-6	4'-0	1'-11	2'-5	2'-11	3'-4	3'-10	1'-9	2'-3	2'-8	3'-2	3'-8	1'-7	2'-1	2'-6	2'-10	3'-3	1'-5	1'-11	2'-2	2'-8	2'-11
	N	1'-4½	1'-4½	1'-4½	1'-4½	1'-4½	1'-3⅝	1'-3⅝	1'-3⅝	1'-3⅝	1'-3⅝	1'-3⅝	1'-3⅝	1'-3⅝	1'-3⅝	1'-3⅝	1'-4¼	1'-4¼	1'-4¼	1'-4¼	1'-4¼	1'-5¼	1'-5¼	1'-5¼	1'-5¼	1'-5¼

4 : 1 Slope	Skew ∡	0°					5°					10°					15°					20°				
	Height H	3'	4'	5'	6'	7'	3'	4'	5'	6'	7'	3'	4'	5'	6'	7'	3'	4'	5'	6'	7'	3'	4'	5'	6'	7'
Dimensions	A	1'-6	1'-6	1'-6	1'-6	1'-6	1'-6	1'-6	1'-6	1'-6	1'-6	1'-6	1'-6	1'-6	1'-6	1'-6	1'-6	1'-6	1'-6	1'-6	1'-6	1'-6	1'-6	1'-6	1'-6	1'-6
	B	9"	1'-0	1'-1	1'-4	1'-8	9"	1'-0	1'-1	1'-3	1'-7	9"	1'-0	1'-1	1'-2	1'-6	9"	1'-0	1'-1	1'-2	1'-5	9"	1'-0	1'-1	1'-2	1'-3
	C	4"	7"	1'-0	1'-3	1'-5	4"	7"	1'-0	1'-4	1'-6	4"	7"	1'-0	1'-5	1'-7	4"	7"	1'-0	1'-5	1'-8	4"	7"	1'-0	1'-5	1'-10
	D	2'-7	3'-1	3'-7	4'-1	4'-7	2'-7	3'-1	3'-7	4'-1	4'-7	2'-7	3'-1	3'-7	4'-1	4'-7	2'-7	3'-1	3'-7	4'-1	4'-7	2'-7	3'-1	3'-7	4'-1	4'-7
	E	8'-0	9'-6	11'-6	13'-6	15'-6	8'-0	10'-0	11'-6	13'-6	15'-6	8'-0	10'-0	12'-0	14'-0	16'-0	8'-6	10'-6	12'-6	14'-6	16'-6	9'-0	11'-0	13'-6	15'-6	17'-6
	F	1'-3	1'-11	2'-8	3'-4	4'-1	1'-3	1'-11	2'-7	3'-4	4'-0	1'-2	1'-11	2'-7	3'-3	4'-0	1'-2	1'-10	2'-6	3'-3	3'-11	1'-2	1'-10	2'-5	3'-1	3'-9
	G	8'-0	9'-6	11'-6	13'-6	15'-6	8'-6	10'-6	12'-6	14'-6	16'-6	9'-0	11'-0	13'-0	15'-6	17'-6	9'-6	12'-0	14'-6	16'-6	19'-0	10'-6	13'-0	15'-6	18'-6	21'-0
	J	1'-3	1'-11	2'-8	3'-4	4'-1	1'-3	1'-11	2'-7	3'-4	4'-0	1'-2	1'-11	2'-7	3'-3	4'-0	1'-2	1'-10	2'-6	3'-3	3'-11	1'-2	1'-10	2'-5	3'-1	3'-9
	K	1'-4½	1'-4½	1'-4½	1'-4½	1'-4½	1'-4½	1'-4½	1'-4½	1'-4½	1'-4½	1'-4½	1'-4½	1'-4½	1'-4½	1'-4½	1'-4½	1'-4½	1'-4½	1'-4½	1'-4½	1'-4½	1'-4½	1'-4½	1'-4½	1'-4½
	L	2'-8	3'-5	4'-0	4'-8	5'-4	2'-5	3'-0	3'-8	4'-4	4'-11	2'-3	2'-10	3'-4	3'-11	4'-5	2'-0	2'-6	3'-1	3'-7	4'-1	1'-10	2'-4	2'-8	3'-2	3'-8
	M	2'-8	3'-5	4'-0	4'-8	5'-4	2'-7	3'-2	3'-10	4'-6	5'-2	2'-6	3'-1	3'-9	4'-4	5'-0	2'-5	2'-11	3'-6	4'-2	4'-8	2'-2	2'-9	3'-4	3'-10	4'-4
	N	1'-4½	1'-4½	1'-4½	1'-4½	1'-4½	1'-3⅝	1'-3⅝	1'-3⅝	1'-3⅝	1'-3⅝	1'-3⅝	1/-3⅝	1'-3⅝	1'-3⅝	1'-3⅝	1'-4¼	1'-4¼	1'-4¼	1'-4¼	1'-4¼	1'-5¼	1'-5¼	1'-5¼	1'-5¼	1'-5¼

6 : 1 Slope	Skew ∡	0°					5°					10°					15°					20°				
	Height H	3'	4'	5'	6'	7'	3'	4'	5'	6'	7'	3'	4'	5'	6'	7'	3'	4'	5'	6'	7'	3'	4'	5'	6'	7'
Dimensions	A	1'-6	1'-6	1'-6	1'-6	1'-6	1'-6	1'-6	1'-6	1'-6	1'-6	1'-6	1'-6	1'-6	1'-6	1'-6	1'-6	1'-6	1'-6	1'-6	1'-6	1'-6	1'-6	1'-6	1'-6	1'-6
	B	9"	1'-0	1'-3	1'-7	2'-0	9"	1'-0	1'-2	1'-7	1'-11	9"	1'-0	1'-1	1'-6	1'-10	9"	1'-0	1'-1	1'-4	1'-8	9"	1'-0	1'-1	1'-3	1'-7
	C	3"	6"	9"	11"	1'-0	3"	6"	10"	11"	1'-1	3"	6"	11"	1'-0	1'-2	3"	6"	11"	1'-2	1'-4	3"	6"	11"	1'-3	1'-5
	D	2'-6	3'-0	3'-6	4'-0	4'-6	2'-6	3'-0	3'-6	4'-0	4'-6	2'-6	3'-0	3'-6	4'-0	4'-6	2'-6	3'-0	3'-6	4'-0	4'-6	2'-6	3'-0	3'-6	4'-0	4'-6
	E	8'-6	11'-0	13'-0	15'-0	17'-0	9'-0	11'-0	13'-6	15'-6	17'-6	9'-6	11'-6	14'-0	16'-6	18'-6	10'-0	12'-6	15'-0	17'-6	19'-6	11'-0	13'-6	16'-0	19'-0	21'-6
	F	1'-1	1'-10	2'-6	3'-3	3'-11	1'-1	1'-10	2'-6	3'-3	3'-11	1'-1	1'-9	2'-6	3'-2	3'-10	1'-1	1'-9	2'-5	3'-1	3'-9	1'-0	1'-8	2'-4	3'-0	3'-8
	G	8'-6	11'-0	13'-0	15'-0	17'-0	9'-6	11'-6	14'-0	16'-0	18'-6	10'-0	12'-6	15'-0	17'-6	20'-0	11'-0	14'-0	16'-6	19'-6	22'-0	12'-6	15'-6	18'-6	21'-6	24'-6
	J	1'-1	1'-10	2'-6	3'-3	3'-11	1'-1	1'-10	2'-6	3'-3	3'-11	1'-1	1'-9	2'-6	3'-2	3'-10	1'-1	1'-9	2'-5	3'-1	3'-9	1'-0	1'-8	2'-4	3'-0	3'-8
	K	1'-4½	1'-4½	1'-4½	1'-4½	1'-4½	1'-4½	1'-4½	1'-4½	1'-4½	1'-4½	1'-4½	1'-4½	1'-4½	1'-4½	1'-4½	1'-4½	1'-4½	1'-4½	1'-4½	1'-4½	1'-4½	1'-4½	1'-4½	1'-4½	1'-4½
	L	3'-1	3'-9	4'-6	5'-4	6'-1	2'-10	3'-7	4'-3	4'-11	5'-8	2'-8	3'-4	3'-11	4'-7	5'-3	2'-5	3'-1	3'-8	4'-3	4'-11	2'-3	2'-10	3'-5	3'-11	4'-6
	M	3'-1	3'-9	4'-6	5'-4	6'-1	2'-11	3'-8	4'-5	5'-2	5'-11	2'-11	3'-7	4'-4	5'-0	5'-8	2'-9	3'-5	4'-1	4'-9	5'-6	2'-7	3'-3	3'-11	4'-6	5'-2
	N	1'-4½	1'-4½	1'-4½	1'-4½	1'-4½	1'-3⅝	1'-3⅝	1'-3⅝	1'-3⅝	1'-3⅝	1'-3⅝	1'-3⅝	1'-3⅝	1'-3⅝	1'-3⅝	1'-4¼	1'-4¼	1'-4¼	1'-4¼	1'-4¼	1'- 5¼	1'-5¼	1'-5¼	1'-5¼	1'-5¼

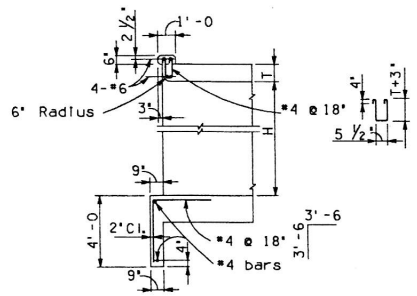

SECTION A-A

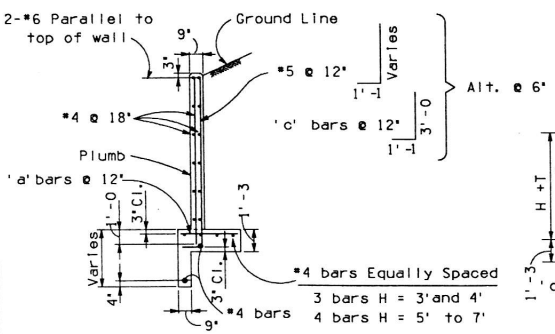

SECTION B-B

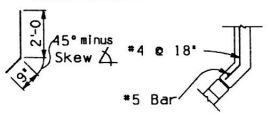

SECTION C-C

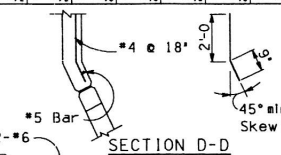

SECTION D-D

'c' bars			
Hgt. H	Slope	Short Wing 0° to 10°	Long Wing 0° to 20°
7'	2 : 1	3 - #5	3 - #5
	4 : 1	5 - #5	5 - #5

'a' bars			
Height H	Short Wing 0° to 10°	Short Wing 15° & 20°	Long Wing 0° to 20°
3'	#4	#4	#4
4'	#4	#4	#4
5'	#4	#4	#4
6'	#5	#4	#5
7'	#6	#4	#6

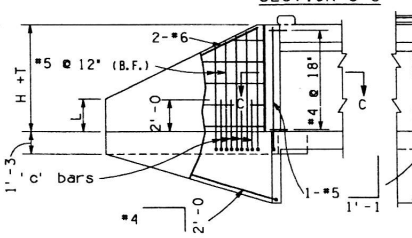

SHORT WING ELEVATION

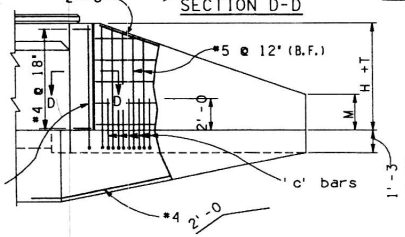

LONG WING ELEVATION

NOTE :

For General Notes and Miscellaneous Details see B-01.10.
For Headwall Quantities see B-05.10, B-05.20 and B-05.30.

DESIGN APPROVED	ARIZONA DEPARTMENT OF TRANSPORTATION HIGHWAYS DIVISION STANDARD DRAWINGS	REVISION 7-88
APPROVED FOR DISTRIBUTION	INLET WINGS CULVERT HEIGHT 3' to 7' SKEW 0° to 20°	STANDARD NO. B-04.30

CADD FILENAME= 2FA
VIEW NAME=

Skew ∡	Θ_1
0°	45°
5°	55°
10°	65°
15°	75°
20°	85°

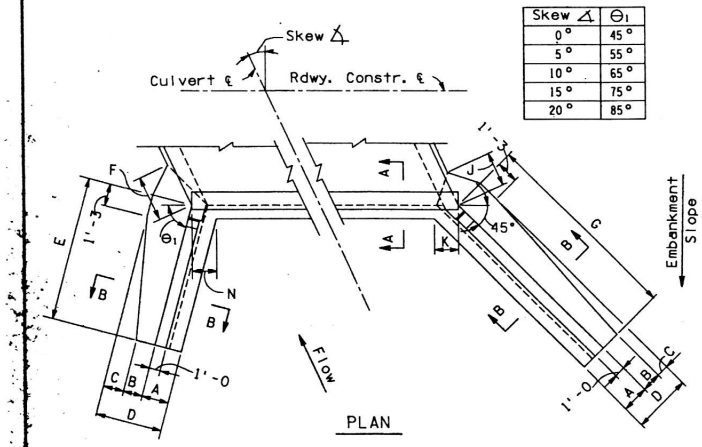

2 : 1 Slope	Skew ∡	0°					5°					10°					15°					20°				
	Height H	8'	9'	10'	11'	12'	8'	9'	10'	11'	12'	8'	9'	10'	11'	12'	8'	9'	10'	11'	12'	8'	9'	10'	11'	12'
Dimensions	A	2'-0	2'-1	2'-2	2'-3	2'-4	2'-0	2'-1	2'-2	2'-3	2'-4	2'-0	2'-1	2'-2	2'-3	2'-4	2'-0	2'-1	2'-2	2'-3	2'-4	2'-0	2'-1	2'-2	2'-3	2'-4
	B	1'-4	1'-5	1'-6	1'-9	1'-11	1'-4	1'-5	1'-6	1'-7	1'-9	1'-4	1'-5	1'-6	1'-7	1'-8	1'-4	1'-5	1'-6	1'-7	1'-8	1'-4	1'-5	1'-6	1'-7	1'-8
	C	2'-2	2'-7	3'-0	3'-6	4'-2	2'-2	2'-7	3'-0	3'-8	4'-4	2'-2	2'-7	3'-0	3'-8	4'-5	2'-2	2'-7	3'-0	3'-8	4'-5	2'-2	2'-7	3'-0	3'-8	4'-5
	D	5'-6	6'-1	6'-8	7'-6	8'-5	5'-6	6'-1	6'-8	7'-6	8'-5	5'-6	6'-1	6'-8	7'-6	8'-5	5'-6	6'-1	6'-8	7'-6	8'-5	5'-6	6'-1	6'-8	7'-6	8'-5
	E	13'-0	14'-6	16'-0	17'-0	18'-6	12'-6	14'-0	15'-6	16'-6	18'-0	12'-6	13'-6	15'-0	16'-6	18'-0	12'-6	14'-0	15'-0	16'-6	18'-0	13'-0	14'-6	15'-6	17'-0	18'-6
	F	4'-8	5'-4	6'-1	7'-1	8'-3	4'-7	5'-4	6'-0	7'-1	8'-3	4'-7	5'-3	5'-11	7'-0	8'-2	4'-6	5'-2	5'-10	6'-10	8'-0	4'-4	5'-0	5'-8	6'-8	7'-9
	G	13'-0	14'-6	16'-0	17'-0	18'-6	13'-6	15'-0	16'-6	18'-0	19'-6	14'-6	16'-0	17'-6	19'-0	20'-6	15'-0	17'-0	18'-6	20'-0	22'-0	16'-0	18'-0	19'-6	21'-6	23'-6
	J	4'-8	5'-4	6'-1	7'-1	8'-3	4'-7	5'-4	6'-0	7'-1	8'-3	4'-7	5'-3	5'-11	7'-0	8'-2	4'-6	5'-2	5'-10	6'-10	8'-0	4'-4	5'-0	5'-8	6'-8	7'-9
	K	2'-0⅞	2'-2⅜	2'-3¾	2'-5⅛	2'-6⅝	2'-0⅞	2'-2⅜	2'-3¾	2'-5⅛	2'-6⅝	2'-0⅞	2'-2⅜	2'-3¾	2'-5⅛	2'-6⅝	2'-0⅞	2'-2⅜	2'-3¾	2'-5⅛	2'-6⅝	2'-0⅞	2'-2⅜	2'-3¾	2'-5⅛	2'-6⅝
	L	4'-6	4'-11	5'-5	6'-1	6'-6	3'-11	4'-4	4'-9	5'-4	5'-8	3'-5	3'-11	4'-3	4'-7	4'-11	3'-0	3'-4	3'-10	4'-1	4'-4	2'-7	2'-10	3'-4	3'-7	3'-10
	M	4'-6	4'-11	5'-5	6'-1	6'-6	4'-3	4'-9	5'-3	5'-8	6'-2	3'-11	4'-5	4'-11	5'-4	5'-10	3'-9	4'-1	4'-6	5'-0	5'-3	3'-5	3'-8	4'-2	4'-6	4'-9
	N	2'-0⅞	2'-2⅜	2'-3¾	2'-5⅛	2'-6⅝	1'-11	2'-0¼	2'-1½	2'-2⅝	2'-3⅞	1'-10¼	1'-11⅜	2'-0½	2'-1⅝	2'-2¾	1'-10½	1'-11½	2'-0½	2'-1½	2'-2⅝	1'-11¼	2'-0¼	2'-1¼	2'-2⅜	2'-3⅞

4 : 1 Slope	Skew ∡	0°					5°					10°					15°					20°				
	Height H	8'	9'	10'	11'	12'	8'	9'	10'	11'	12'	8'	9'	10'	11'	12'	8'	9'	10'	11'	12'	8'	9'	10'	11'	12'
Dimensions	A	2'-0	2'-1	2'-2	2'-3	2'-4	2'-0	2'-1	2'-2	2'-3	2'-4	2'-0	2'-1	2'-2	2'-3	2'-4	2'-0	2'-1	2'-2	2'-3	2'-4	2'-0	2'-1	2'-2	2'-3	2'-4
	B	1'-8	1'-11	2'-2	2'-5	2'-8	1'-6	1'-9	2'-0	2'-3	2'-6	1'-5	1'-8	1'-11	2'-2	2'-4	1'-4	1'-6	1'-9	1'-11	2'-2	1'-4	1'-5	1'-6	1'-8	1'-10
	C	1'-6	1'-8	1'-10	2'-3	2'-9	1'-8	1'-10	2'-0	2'-5	2'-11	1'-9	1'-11	2'-1	2'-6	3'-1	1'-10	2'-1	2'-3	2'-9	3'-3	1'-10	2'-2	2'-6	3'-0	3'-7
	D	5'-2	5'-8	6'-2	6'-11	7'-9	5'-2	5'-8	6'-2	6'-11	7'-9	5'-2	5'-8	6'-2	6'-11	7'-9	5'-2	5'-8	6'-2	6'-11	7'-9	5'-2	5'-8	6'-2	6'-11	7'-9
	E	17'-0	19'-0	21'-0	23'-0	25'-0	17'-6	19'-6	21'-0	23'-0	25'-0	18'-0	19'-6	21'-6	23'-6	25'-6	18'-6	20'-6	22'-6	24'-6	26'-6	20'-0	22'-0	24'-0	26'-6	28'-6
	F	4'-2	4'-9	5'-4	6'-3	7'-4	4'-2	4'-9	5'-4	6'-3	7'-4	4'-1	4'-8	5'-3	6'-2	7'-3	4'-0	4'-7	5'-2	6'-1	7'-1	3'-11	4'-5	5'-0	5'-11	6'-11
	G	17'-0	19'-0	21'-0	23'-0	25'-0	18'-6	20'-6	22'-6	24'-6	26'-6	19'-6	22'-0	24'-0	26'-0	28'-6	21'-6	23'-6	26'-0	28'-6	30'-6	23'-6	26'-0	28'-6	31'-0	34'-0
	J	4'-2	4'-9	5'-4	6'-3	7'-4	4'-2	4'-9	5'-4	6'-3	7'-4	4'-1	4'-8	5'-3	6'-2	7'-3	4'-0	4'-7	5'-2	6'-1	7'-1	3'-11	4'-5	5'-0	5'-11	6'-11
	K	2'-0⅞	2'-2⅜	2'-3¾	2'-5⅛	2'-6⅝	2'-0⅞	2'-2⅜	2'-3¾	2'-5⅛	2'-6⅝	2'-0⅞	2'-2⅜	2'-3¾	2'-5⅛	2'-6⅝	2'-0⅞	2'-2⅜	2'-3¾	2'-5⅛	2'-6⅝	2'-0⅞	2'-2⅜	2'-3¾	2'-5⅛	2'-6⅝
	L	6'-1	6'-8	7'-4	8'-0	8'-8	5'-6	6'-1	6'-9	7'-4	7'-11	5'-0	5'-8	6'-2	6'-9	7'-3	4'-7	5'-1	5'-8	6'-2	6'-8	4'-1	4'-7	5'-1	5'-6	6'-0
	M	6'-1	6'-8	7'-4	8'-0	8'-8	5'-10	6'-5	7'-1	7'-9	8'-5	5'-7	6'-2	6'-10	7'-6	8'-0	5'-3	5'-11	6'-6	7'-0	7'-8	4'-11	5'-6	6'-0	6'-7	7'-1
	N	2'-0⅞	2'-2⅜	2'-3¾	2'-5⅛	2'-6⅝	1'-11	2'-0¼	2'-1½	2'-2⅝	2'-3⅞	1'-10¼	1'-11⅜	2'-0½	2'-1⅝	2'-2¾	1'-10½	1'-11½	2'-0½	2'-1½	2'-2⅝	1'-11¼	2'-0¼	2'-1¼	2'-2⅜	2'-3⅞

6 : 1 Slope	Skew ∡	0°	5°	10°	15°	20°
	Height H	8'	8'	8'	8'	8'
Dimensions	A	2'-0	2'-0	2'0	2'-0	2'-0
	B	1'-11	1'-10	1'-9	1'-8	1'-6
	C	1'-2	1'-3	1'-4	1'-5	1'-7
	D	5'-1	5'-1	5'-1	5'-1	5'-1
	E	19'-6	20'-0	21'-0	22'-0	24'-0
	F	4'-1	4'-0	4'-0	3'-11	3'-9
	G	19'-6	21'-0	22'-6	24'-6	27'-6
	J	4'-1	4'-0	4'-0	3'-11	3'-9
	K	2'-0⅞	2'-0⅞	2'-0⅞	2'-0⅞	2'-0⅞
	L	6'-9	6'-4	5'-11	5'-6	5'-1
	M	6'-9	6'-7	6'-5	6'-2	5'-10
	N	2'-0⅞	1'-11	1'-10¼	1'-10½	1'-11¼

Height H	'a' bars	'b' bars
8'	#5	#5
9'	#6	#5
10'	#6	#5
11'	#6	#5
12'	#6	#6

	Height H.	'c' Bars: Short Wing Skew ∡ 0°	5°	10°	15°	20°	Long Wing Wall	Dim 'X'	• 'd' Bars: Short Wing 0° to 10°	15° & 20°	Long Wing 0° to 20°
2:1 Slope	8'	3-#5	3-#5	2-#5	2-#5	-	3-#5	2'-0	-	-	-
	9'	5-#5	4-#5	3-#5	3-#5	2-#5	5-#5	3'-0	-	-	-
	10'	8-#6	7-#6	6-#6	5-#6	4-#6	8-#6	4'-3	3-#5	-	3-#5
	11'	11-#7	10-#7	9-#7	7-#7	6-#7	11-#7	6'-9	6-#5	5-#5	6-#5
	12'	11-#7	10-#7	9-#7	7-#7	6-#7	11-#7	6'-9	9-#7	7-#6	9-#7
4:1 Slope	9'	7-#5	6-#5	6-#5	5-#5	4-#5	7-#5	3'-0	-	-	-
	10'	12-#5	11-#5	10-#5	9-#5	8-#5	12-#5	4'-0	-	-	-
	11'	18-#7	17-#7	16-#7	15-#7	14-#7	18-#7	6-3	11-#5	6-#5	11-#5
	12'	18-#7	17-#7	16-#7	15-#7	14-#7	18-#7	6'-3	11-#6	11-#6	11-#6

• 'd' bars alternate with 'a' bars at high end of wall.

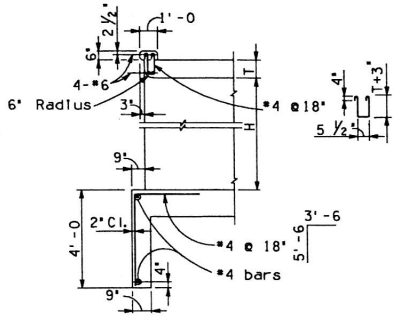

SECTION A-A

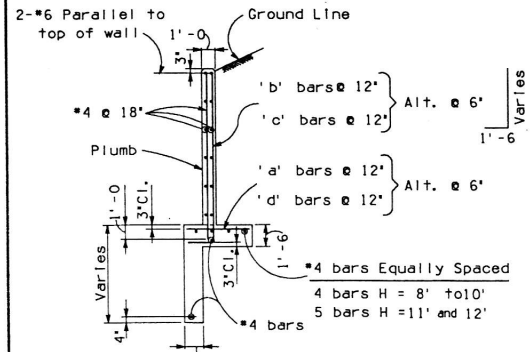

SECTION B-B

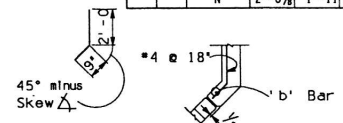

SECTION C-C

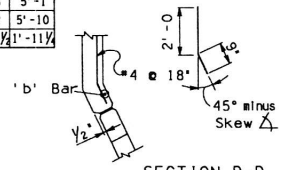

SECTION D-D

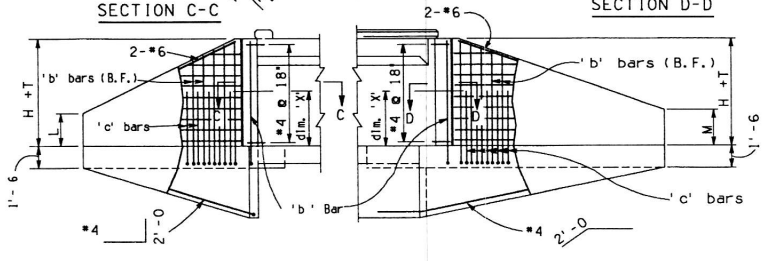

SHORT WING ELEVATION

LONG WING ELEVATION

NOTE :

For General Notes and Miscellaneous Details see B-01.10.
For Headwall Quantities see B-05.10, B-05.20 and B-05.30.

DESIGN APPROVED	ARIZONA DEPARTMENT OF TRANSPORTATION HIGHWAYS DIVISION STANDARD DRAWINGS	REVISION
APPROVED FOR DISTRIBUTION	INLET WINGS CULVERT HEIGHT 8' to 12' SKEW 0° to 20°	STANDARD NO. B-04.40

CADD FILENAME= 2FA
VIEW NAME=

Skew ∡	Θ_1	Θ_2
25°	65°	45°
30°	60°	40°
35°	55°	35°
40°	50°	30°
45°	45°	25°

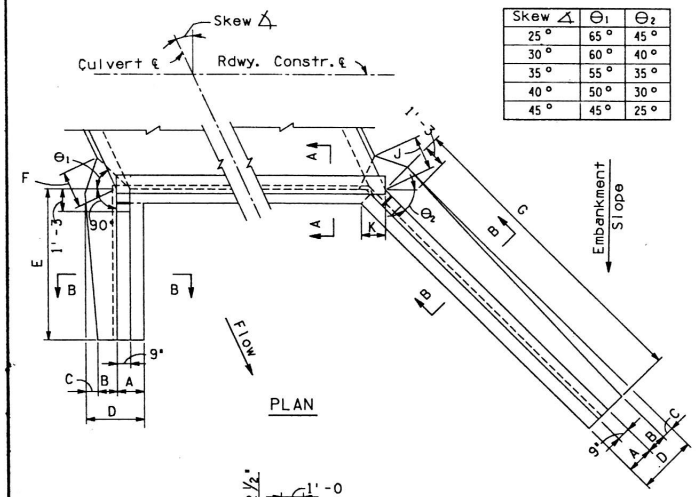

2 : 1 Slope	Skew ∡	25°					30°					35°					40°					45°				
	Height H	3'	4'	5'	6'	7'	3'	4'	5'	6'	7'	3'	4'	5'	6'	7'	3'	4'	5'	6'	7'	3'	4'	5'	6'	7'
Dimensions	A	1'-6	1'-6	1'-6	1'-6	1'-6	1'-6	1'-6	1'-6	1'-6	1'-6	1'-6	1'-6	1'-6	1'-6	1'-6	1'-6	1'-6	1'-6	1'-6	1'-6	1'-6	1'-6	1'-6	1'-6	1'-6
	B	9"	1'-0	1'-1	1'-2	1'-3	9"	1'-0	1'-1	1'-2	1'-3	9"	1'-0	1'-1	1'-2	1'-3	9"	1'-0	1'-1	1'-2	1'-3	9"	1'-0	1'-1	1'-2	1'-3
	C	6"	9"	1'-3	1'-8	2'-1	7"	10"	1'-3	1'-9	2'-2	7"	11"	1'-4	1'-10	2'-3	8"	11"	1'-5	1'-10	2'-4	8"	1'-0	1'-6	1'-11	2'-5
	D	2'-9	3'-3	3'-10	4'-4	4'-10	2'-10	3'-4	3'-10	4'-5	4'-11	2'-10	3'-5	3'-11	4'-6	5'-0	2'-11	3'-5	4'-0	4'-6	5'-1	2'-11	3'-6	4'-1	4'-7	5'-2
	E	6'-0	7'-6	8'-6	10'-0	11'-6	5'-6	7'-0	8'-0	9'-6	11'-0	5'-6	6'-6	8'-0	9'-0	10'-6	5'-0	6'-6	7'-6	8'-6	10'-0	5'-0	6'-0	7'-0	8'-6	9'-6
	F	1'-4	2'-0	2'-9	3'-5	4'-1	1'-6	2'-2	2'-11	3'-8	4'-4	1'-7	2'-4	3'-1	3'-10	4'-7	1'-8	2'-5	3'-3	3'-11	4'-9	1'-8	2'-6	3'-4	4'-1	4'-10
	G	8'-0	10'-0	11'-6	13'-6	15'-6	8'-6	10'-6	12'-6	14'-6	16'-6	9'-0	11'-0	13'-6	15'-6	17'-6	10'-0	12'-0	14'-6	17'-0	19'-6	10'-6	13'-6	16'-0	18'-6	21'-0
	J	1'-3	1'-11	2'-8	3'-4	4'-0	1'-5	2'-0	2'-8	3'-5	4'-1	1'-5	2'-2	2'-9	3'-6	4'-2	1'-6	2'-2	2'-11	3'-6	4'-3	1'-6	2'-3	3'-0	3'-8	4'-5
	K	1'-4½	1'-4½	1'-4½	1'-4½	1'-4½	1'-5¼	1'-5¼	1'-5¼	1'-5¼	1'-5¼	1'-6½	1'-6½	1'-6½	1'-6½	1'-6½	1'-8⅜	1'-8⅜	1'-8⅜	1'-8⅜	1'-8⅜	1'-11¼	1'-11¼	1'-11¼	1'-11¼	1'-11¼
	L	1'-1	1'-4	1'-10	2'-1	2'-4	1'-4	1'-7	2'-1	2'-4	2'-7	1'-4	1'-10	2'-1	2'-7	2'-10	1'-7	1'-10	2'-4	2'-10	3'-1	1'-7	2'-1	2'-7	2'-10	3'-4
	M	1'-3	1'-6	2'-0	2'-3	2'-7	1'-4	1'-8	2'-1	2'-5	2'-9	1'-6	1'-11	2'-2	2'-7	3'-1	1'-7	2'-1	2'-5	2'-10	3'-2	1'-10	2'-3	2'-8	3'-2	3'-8

4 : 1 Slope	Skew ∡	25°					30°					35°					40°					45°				
	Height H	3'	4'	5'	6'	7'	3'	4'	5'	6'	7'	3'	4'	5'	6'	7'	3'	4'	5'	6'	7'	3'	4'	5'	6'	7'
Dimensions	A	1'-6	1'-6	1'-6	1'-6	1'-6	1'-6	1'-6	1'-6	1'-6	1'-6	1'-6	1'-6	1'-6	1'-6	1'-6	1'-6	1'-6	1'-6	1'-6	1'-6	1'-6	1'-6	1'-6	1'-6	1'-6
	B	9"	1'-0	1'-1	1'-2	1'-3	9"	1'-0	1'-1	1'-2	1'-3	9"	1'-0	1'-1	1'-2	1'-3	9"	1'-0	1'-1	1'-2	1'-4	9"	1'-0	1'-1	1'-3	1'-7
	C	4"	7"	1'-0	1'-5	1'-10	4"	7"	1'-0	1'-5	1'-10	4"	7"	1'-0	1'-5	1'-10	4"	7"	1'-0	1'-5	1'-9	4"	7"	1'-0	1'-5	1'-7
	D	2'-7	3'-1	3'-7	4'-1	4'-7	2'-7	3'-1	3'-7	4'-1	4'-7	2'-7	3'-1	3'-7	4'-1	4'-7	2'-7	3'-1	3'-7	4'-1	4'-7	2'-7	3'-1	3'-7	4'-2	4'-8
	E	9'-0	11'-0	13'-6	15'-6	17'-6	8'-6	10'-6	12'-6	14'-6	16'-6	7'-6	9'-6	11'-6	13'-6	15'-0	7'-0	9'-0	10'-6	12'-6	14'-0	7'-0	8'-6	10'-0	12'-0	13'-6
	F	1'-2	1'-10	2'-5	3'-1	3'-9	1'-2	1'-10	2'-6	3'-3	3'-11	1'-2	1'-11	2'-7	3'-3	4'-0	1'-3	1'-11	2'-7	3'-4	4'-0	1'-3	1'-11	2'-8	3'-6	4'-2
	G	12'-0	14'-6	17'-6	20'-6	23'-6	12'-6	15'-6	18'-6	21'-6	24'-6	13'-0	16'-0	19'-6	22'-6	25'-6	14'-0	17'-0	20'-6	24'-0	27'-6	15'-0	18'-6	22'-0	25'-6	29'-0
	J	1'-1	1'-9	2'-4	3'-0	3'-8	1'-1	1'-9	2'-4	3'-0	3'-8	1'-1	1'-9	2'-4	3'-0	3'-8	1'-1	1'-9	2'-4	3'-0	3'-8	1'-1	1'-9	2'-4	3'-1	3'-9
	K	1'-4½	1'-4½	1'-4½	1'-4½	1'-4½	1'-5¼	1'-5¼	1'-5¼	1'-5¼	1'-5¼	1'-6½	1'-6½	1'-6½	1'-6½	1'-6½	1'-8⅜	1'-8⅜	1'-8⅜	1'-8⅜	1'-8⅜	1'-11¼	1'-11¼	1'-11¼	1'-11¼	1'-11¼
	L	1'-10	2'-4	2'-8	3'-2	3'-8	1'-11	2'-5	2'-11	3'-5	3'-11	2'-2	2'-8	3'-2	3'-8	4'-4	2'-4	2'-10	3'-5	3'-11	4'-7	2'-4	2'-11	3'-7	4'-1	4'-8
	M	1'-11	2'-6	3'-0	3'-5	3'-11	2'-1	2'-7	3'-1	3'-7	4'-2	2'-2	2'-9	3'-3	3'-10	4'-5	2'-4	2'-11	3'-6	4'-1	4'-8	2'-6	3'-1	3'-9	4'-4	5'-0

6 : 1 Slope	Skew ∡	25°					30°					35°					40°					45°				
	Height H	3'	4'	5'	6'	7'	3'	4'	5'	6'	7'	3'	4'	5'	6'	7'	3'	4'	5'	6'	7'	3'	4'	5'	6'	7'
Dimensions	A	1'-6	1'-6	1'-6	1'-6	1'-6	1'-6	1'-6	1'-6	1'-6	1'-6	1'-6	1'-6	1'-6	1'-6	1'-6	1'-6	1'-6	1'-6	1'-6	1'-6	1'-6	1'-6	1'-6	1'-6	1'-6
	B	9"	1'-0	1'-1	1'-2	1'-4	9"	1'-0	1'-1	1'-2	1'-6	9"	1'-0	1'-1	1'-3	1'-7	9"	1'-0	1'-1	1'-4	1'-8	9"	1'-0	1'-2	1'-6	1'-10
	C	3"	6"	11"	1'-4	1'-8	3"	6"	11"	1'-4	1'-6	3"	6"	11"	1'-3	1'-5	3"	6"	11"	1'-2	1'-4	3"	6"	10"	1'-0	1'-2
	D	2'-6	3'-0	3'-6	4'-0	4'-6	2'-6	3'-0	3'-6	4'-0	4'-6	2'-6	3'-0	3'-6	4'-0	4'-6	2'-6	3'-0	3'-6	4'-0	4'-6	2'-6	3'-0	3'-6	4'-0	4'-6
	E	11'-0	13'-6	16'-0	19'-0	21'-6	10'-0	12'-6	14'-6	17'-0	19'-6	9'-0	11'-6	13'-6	15'-6	18'-0	8'-6	10'-6	12'-6	14'-6	16'-6	8'-0	10'-0	12'-0	13'-6	15'-6
	F	1'-0	1'-8	2'-4	3'-0	3'-8	1'-1	1'-9	2'-5	3'-1	3'-9	1'-1	1'-9	2'-6	3'-2	3'-10	1'-1	1'-10	2'-6	3'-3	3'-11	1'-1	1'-10	2'-6	3'-3	3'-11
	G	14'-0	17'-6	21'-0	24'-6	28'-0	14'-6	18'-6	22'-0	25'-6	29'-0	15'-6	19'-0	23'-0	26'-6	30'-6	16'-0	20'-0	24'-0	28'-0	32'-0	17'-0	21'-0	25'-0	29'-6	33'-6
	J	1'-0	1'-7	2'-3	2'-11	3'-6	1'-0	1'-7	2'-3	2'-11	3'-6	1'-0	1'-7	2'-3	2'-11	3'-6	1'-0	1'-7	2'-3	2'-11	3'-6	1'-0	1'-7	2'-3	2'-11	3'-6
	K	1'-4½	1'-4½	1'-4½	1'-4½	1'-4½	1'-5¼	1'-5¼	1'-5¼	1'-5¼	1'-5¼	1'-6½	1'-6½	1'-6½	1'-6½	1'-6½	1'-8⅜	1'-8⅜	1'-8⅜	1'-8⅜	1'-8⅜	1'-11¼	1'-11¼	1'-11¼	1'-11¼	1'-11¼
	L	2'-3	2'-10	3'-5	3'-11	4'-6	2'-5	3'-0	3'-8	4'-3	4'-10	2'-7	3'-2	3'-10	4'-6	5'-1	2'-8	3'-4	4'-0	4'-8	5'-4	2'-9	3'-5	4'-1	4'-10	5'-6
	M	2'-5	3'-0	3'-7	4'-2	4'-9	2'-6	3'-1	3'-8	4'-4	4'-11	2'-7	3'-3	3'-10	4'-6	5'-2	2'-9	3'-5	4'-1	4'-9	5'-5	2'-10	3'-7	4'-4	5'-0	5'-8

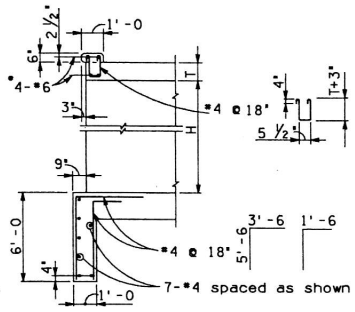

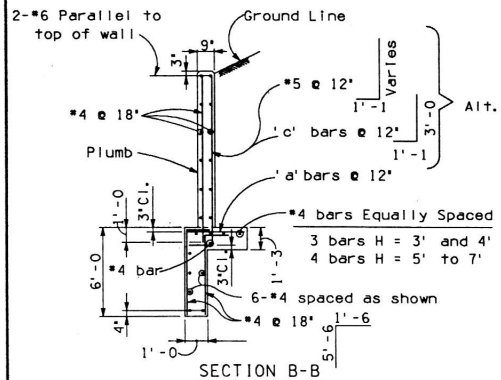

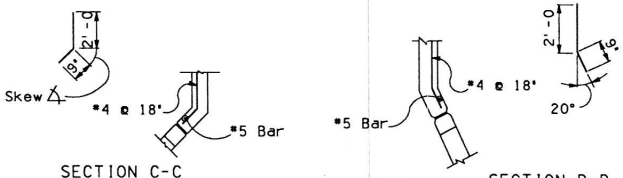

H = 7'	'c' Bars Long Wingwall	
Skew ∡	2 : 1 Slope	4 : 1 Slope
25°	3 - *5	3 - *5
30°	3 - *5	3 - *5
35°	4 - *5	4 - *5
40°	4 - *5	4 - *5
45°	5 - *5	4 - *5

'a' Bars		
Height H	Short Wing	Long Wing
3'	*4	*4
4'	*4	*4
5'	*4	*4
6'	*4	*5
7'	*4	*6

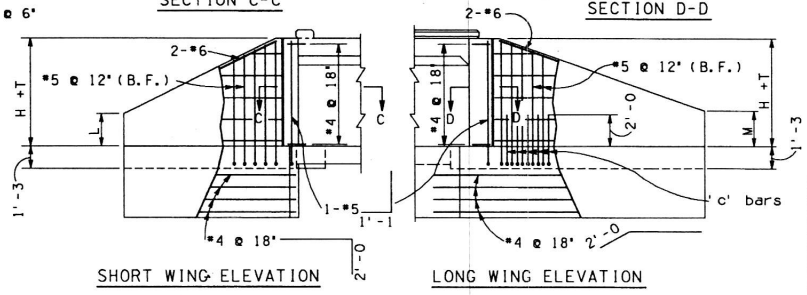

NOTE :

For General Notes and Miscellaneous Details see B-01.10.
For Headwall Quantities see B-05.10, B-05.20 and B-05.30.

DESIGN APPROVED	ARIZONA DEPARTMENT OF TRANSPORTATION HIGHWAYS DIVISION STANDARD DRAWINGS	REVISION 7-88
APPROVED FOR DISTRIBUTION	OUTLET WINGS CULVERT HEIGHT 3' to 7' SKEW 25° to 45°	STANDARD NO. B-04.50

CADD FILENAME= ZFA
VIEW NAME=

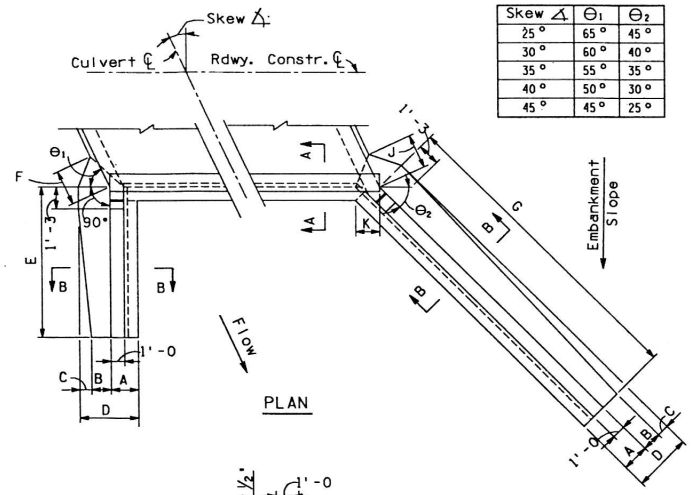

Skew ∆	Θ_1	Θ_2
25°	65°	45°
30°	60°	40°
35°	55°	35°
40°	50°	30°
45°	45°	25°

2 : 1 Slope Dimensions	Skew ∆	25°					30°					35°					40°					45°				
	Height H	8'	9'	10'	11'	12'	8'	9'	10'	11'	12'	8'	9'	10'	11'	12'	8'	9'	10'	11'	12'	8'	9'	10'	11'	12'
	A	2'-0	2'-1	2'-2	2'-3	2'-4	2'-0	2'-1	2'-2	2'-3	2'-4	2'-0	2'-1	2'-2	2'-3	2'-4	2'-0	2'-1	2'-2	2'-3	2'-4	2'-0	2'-1	2'-2	2'-3	2'-4
	B	1'-4	1'-5	1'-6	1'-7	1'-8	1'-4	1'-5	1'-6	1'-7	1'-8	1'-4	1'-5	1'-6	1'-7	1'-8	1'-4	1'-5	1'-6	1'-7	1'-8	1'-4	1'-5	1'-6	1'-7	1'-9
	C	2'-2	2'-7	3'-0	3'-8	4'-5	2'-3	2'-8	3'-1	3'-9	4'-7	2'-4	2'-9	3'-2	3'-11	4'-9	2'-5	2'-10	3'-4	4'-1	4'-11	2'-6	2'-11	3'-5	4'-2	5'-0
	D	5'-6	6'-1	6'-8	7'-6	8'-5	5'-7	6'-2	6'-9	7'-7	8'-7	5'-8	6'-3	6'-10	7'-9	8'-9	5'-9	6'-4	7'-0	7'-11	8'-11	5'-10	6'-5	7'-1	8'-0	9'-1
	E	13'-0	14'-6	15'-6	17'-0	18'-6	12'-0	13'-6	15'-0	16'-0	17'-6	11'-6	13'-0	14'-0	15'-6	16'-6	11'-0	12'-6	13'-6	15'-0	16'-0	11'-0	12'-0	13'-0	14'-6	15'-6
	F	4'-4	5'-0	5'-8	6'-8	7'-9	4'-7	5'-3	5'-11	7'-0	8'-3	4'-10	5'-6	6'-2	7'-4	8'-8	5'-0	5'-8	6'-6	7'-8	9'-0	5'-1	5'-10	6'-8	7'-10	9'-3
	G	17'-6	19'-6	21'-0	23'-0	25'-0	18'-6	20'-6	22'-6	24'-6	26'-6	20'-0	22'-0	24'-6	26'-6	28'-6	21'-6	24'-0	26'-6	29'-0	31'-0	24'-0	26'-6	29'-0	31'-6	34'-6
	J	4'-2	4'-10	5'-5	6'-5	7'-6	4'-3	4'-11	5'-7	6'-6	7'-8	4'-5	5'-0	5'-8	6'-9	7'-11	4'-6	5'-2	5'-11	6'-11	8'-2	4'-7	5'-3	6'-0	7'-1	8'-4
	K	2'-0⅞	2'-2⅜	2'-3¾	2'-5⅛	2'-6⅝	2'-2⅝	2'-4⅛	2'-5¾	2'-7¼	2'-8⅞	2'-5	2'-6¾	2'-8½	2'-10¼	3'-0	2'-8⅜	2'-10⅜	3'-0⅜	3'-2⅜	3'-4⅜	3'-1½	3'-3⅞	3'-6¼	3'-8⅝	3'-11
	L	2'-7	2'-10	3'-4	3'-7	3'-10	3'-1	3'-4	3'-7	4'-1	4'-4	3'-4	3'-7	4'-1	4'-4	4'-10	3'-7	3'-10	4'-4	4'-7	5'-1	3'-7	4'-1	4'-7	4'-10	5'-4
	M	2'-11	3'-2	3'-8	3'-11	4'-3	3'-1	3'-6	3'-10	4'-2	4'-7	3'-4	3'-9	4'-0	4'-6	4'-11	3'-8	4'-1	4'-5	4'-10	5'-4	4'-0	4'-6	4'-11	5'-5	5'-9

4 : 1 Slope Dimensions	Skew ∆	25°					30°					35°					40°					45°				
	Height H	8'	9'	10'	11'	12'	8'	9'	10'	11'	12'	8'	9'	10'	11'	12'	8'	9'	10'	11'	12'	8'	9'	10'	11'	12'
	A	2'-0	2'-1	2'-2	2'-3	2'-4	2'-0	2'-1	2'-2	2'-3	2'-4	2'-0	2'-1	2'-2	2'-3	2'-4	2'-0	2'-1	2'-2	2'-3	2'-4	2'-0	2'-1	2'-2	2'-3	2'-4
	B	1'-4	1'-5	1'-6	1'-7	1'-8	1'-4	1'-5	1'-6	1'-7	1'-9	1'-4	1'-5	1'-6	1'-9	1'-11	1'-4	1'-6	1'-9	1'-11	2'-2	1'-6	1'-9	2'-0	2'-3	2'-5
	C	1'-10	2'-2	2'-6	3'-1	3'-9	1'-10	2'-2	2'-7	3'-1	3'-8	1'-11	2'-3	2'-7	2'-11	3'-7	1'-11	2'-2	2'-4	2'-10	3'-4	1'-9	1'-11	2'-1	2'-6	3'-2
	D	5'-2	5'-8	6'-2	6'-11	7'-9	5'-2	5'-8	6'-3	6'-11	7'-9	5'-3	5'-9	6'-3	6'-11	7'-10	5'-3	5'-9	6'-3	7'-0	7'-10	5'-3	5'-9	6'-3	7'-0	7'-11
	E	20'-0	22'-0	24'-0	22'-6	28'-6	18'-6	20'-6	22'-6	24'-6	26'-6	17'-0	19'-0	20'-6	22'-6	24'-6	16'-0	17'-6	19'-6	21'-0	23'-0	15'-0	17'-0	18'-6	20'-0	22'-0
	F	3'-11	4'-5	5'-0	5'-11	6'-11	4'-0	4'-7	5'-3	6'-1	7'-1	4'-3	4'-10	5'-5	6'-2	7'-4	4'-3	4'-10	5'-5	6'-5	7'-5	4'-3	4'-10	5'-6	6'-5	7'-7
	G	26'-0	29'-0	32'-0	35'-0	37'-6	27'-6	30'-6	33'-6	36'-6	39'-6	29'-0	32'-0	35'-6	38'-6	41'-6	30'-6	34'-0	37'-6	41'-0	44'-0	33'-0	36'-6	40'-0	43'-6	47'-6
	J	3'-9	4'-3	4'-10	5'-8	6'-8	3'-9	4'-3	4'-11	5'-8	6'-8	3'-10	4'-5	4'-11	5'-8	6'-9	3'-10	4'-5	4'-11	5'-9	6'-9	3'-10	4'-5	4'-11	5'-9	6'-10
	K	2'-0⅞	2'-2⅜	2'-3¾	2'-5⅛	2'-6⅝	2'-2⅝	2'-4⅛	2'-5¾	2'-7¼	2'-8⅞	2'-5	2'-6¾	2'-8½	2'-10¼	3'-0	2'-8⅜	2'-10⅜	3'-0⅜	3'-2⅜	3'-4⅜	3'-1½	3'-3⅞	3'-6¼	3'-8⅝	3'-11
	L	4'-1	4'-7	5'-1	5'-5	5'-11	4'-5	4'-11	5'-5	5'-11	6'-5	4'-10	5'-4	5'-11	6'-5	6'-11	5'-1	5'-8	6'-2	6'-10	7'-4	5'-4	5'-10	6'-5	7'-1	7'-7
	M	4'-6	4'-11	5'-5	5'-11	6'-5	4'-8	5'-2	5'-8	6'-2	6'-9	4'-11	5'-6	6'-0	6'-7	7'-1	5'-3	5'-10	6'-5	6'-11	7'-7	5'-7	6'-2	6'-10	7'-6	8'-1

6 : 1 Slope Dimensions	Skew ∆	25°	30°	35°	40°	45°
	Height H	8'	8'	8'	8'	8'
	A	2'-0	2'-0	2'-0	2'-0	2'-0
	B	1'-4	1'-4	1'-6	1'-8	1'-10
	C	1'-9	1'-9	1'-7	1'-5	1'-3
	D	5'-1	5'-1	5'-1	5'-1	5'-1
	E	24'-0	22'-0	20'-0	18'-6	17'-6
	F	3'-9	3'-11	4'-0	4'-0	4'-1
	G	31'-6	32'-6	34'-0	35'-6	37'-6
	J	3'-8	3'-8	3'-8	3'-8	3'-8
	K	2'-0⅞	2'-2⅝	2'-5	2'-8⅜	3'-1½
	L	5'-1	5'-5	5'-9	6'-0	6'-2
	M	5'-4	5'-7	5'-10	6'-1	6'-5

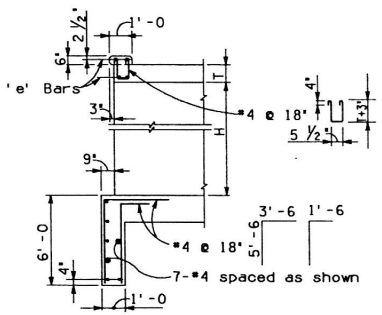

SECTION A-A

'e' Bars	Span		
Skew ∆	8'	10'	12'
25° to 30°	*6	*6	*7
35°	*6	*7	*8
40° & 45°	*6	*7	*9

		'c' Bars							'd' Bars	
		Long Wing					Short Wing		Long Wing	Short Wing
	Height H	Skew ∆					Dim. 'X'	All Skew ∆	Dim. 'X'	All Skew ∆
		25°	30°	35°	40°	45°				
2 : 1 Slope	8'	4 -*5	4 -*5	5 -*5	5 -*5	6 -*5	2'-3	-	-	-
	9'	6 -*5	7 -*5	8 -*5	9 -*5	10 -*5	3'-3	2 -*5	2'-3	4 -*5
	10'	9 -*7	10 -*7	11 -*7	13 -*7	15 -*7	6'-0	4 -*5	3'-3	8 -*5
	11'	11 -*7	12 -*7	14 -*7	16 -*7	19 -*7	7'-0	6 -*6	4'-3	13 -*7
	12'	7 -*7	8 -*7	9 -*7	10 -*7	12 -*7	5'-3	6 -*6	4'-6	9 -*7
4 : 1 Slope	8'	3 -*5	4 -*5	4 -*5	5 -*5	5 -*5	2'-3	-	-	-
	9'	8 -*5	9 -*5	10 -*5	11 -*5	13 -*5	2'-6	4 -*5	2'-3	-
	10'	14 -*6	15 -*6	17 -*6	19 -*6	23 -*6	3'-9	8 -*5	3'-3	-
	11'	19 -*7	21 -*7	24 -*7	27 -*7	31 -*7	6'-3	12 -*6	4'-3	10 -*5
	12'	10 -*5	11 -*5	12 -*5	14 -*5	16 -*5	2'-9	12 -*6	4'-6	8 -*5

• 'd' bars alternate with 'a' bars at high end of wall

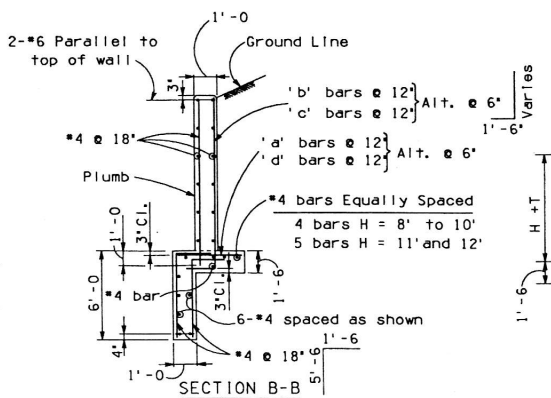

SECTION B-B

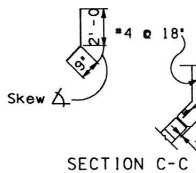

SECTION C-C

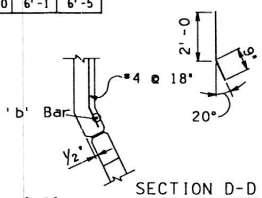

SECTION D-D

Height H	Short Wing 'a' Bars	Short Wing 'b' Bars	Long Wing 'a' Bars	Long Wing 'b' Bars
8'	*4	*5	*6	*5
9'	*5	*5	*6	*5
10'	*6	*5	*6	*5
11'	*6	*5	*6	*5
12'	*6	*6	*7	*7

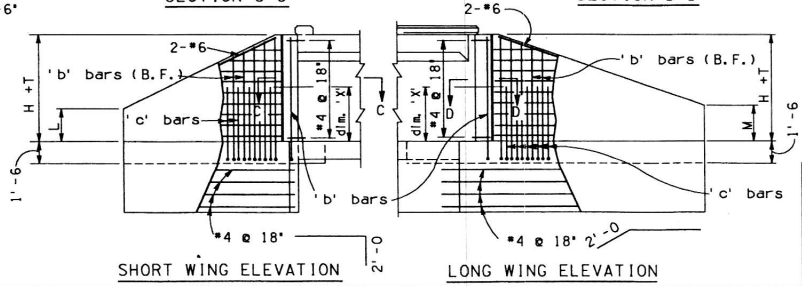

SHORT WING ELEVATION

LONG WING ELEVATION

NOTE:

For General Notes and Miscellaneous Details see B-01.10.
For Headwall Quantities see B-05.10, B-05.20 and B-05.30.

DESIGN APPROVED	ARIZONA DEPARTMENT OF TRANSPORTATION HIGHWAYS DIVISION STANDARD DRAWINGS	REVISION 7-88
APPROVED FOR DISTRIBUTION	OUTLET WINGS CULVERT HEIGHT 8' to 12' SKEW 25° to 45°	STANDARD NO. B-04.60

CADD FILENAME= 2FA
VIEW NAME=

Skew ∡	Θ_1	Θ_2
25°	65°	45°
30°	60°	40°
35°	55°	35°
40°	50°	30°
45°	45°	25°

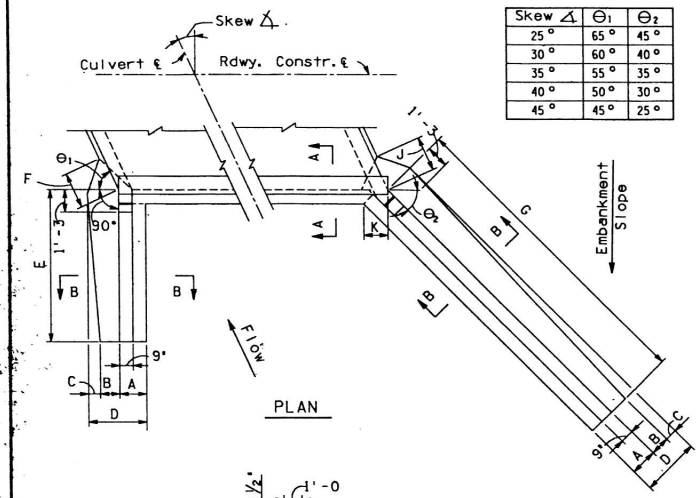

2 : 1 Slope Dimensions	Skew ∡	25°					30°					35°					40°					45°				
	Height H	3'	4'	5'	6'	7'	3'	4'	5'	6'	7'	3'	4'	5'	6'	7'	3'	4'	5'	6'	7'	3'	4'	5'	6'	7'
	A	1'-6	1'-6	1'-6	1'-6	1'-6	1'-6	1'-6	1'-6	1'-6	1'-6	1'-6	1'-6	1'-6	1'-6	1'-6	1'-6	1'-6	1'-6	1'-6	1'-6	1'-6	1'-6	1'-6	1'-6	1'-6
	B	9"	1'-0	1'-1	1'-2	1'-3	9"	1'-0	1'-1	1'-2	1'-3	9"	1'-0	1'-1	1'-2	1'-3	9"	1'-0	1'-1	1'-2	1'-3	9"	1'-0	1'-1	1'-2	1'-3
	C	6"	9"	1'-3	1'-8	2'-1	7"	10"	1'-3	1'-9	2'-2	7"	11"	1'-4	1'-10	2'-3	8"	11"	1'-5	1'-10	2'-4	8"	1'-0	1'-6	1'-11	2'-5
	D	2'-9	3'-3	3'-10	4'-4	4'-10	2'-10	3'-4	3'-10	4'-5	4'-11	2'-10	3'-5	3'-11	4'-6	5'-0	2'-11	3'-5	4'-0	4'-6	5'-1	2'-11	3'-6	4'-1	4'-7	5'-2
	E	6'-0	7'-6	8'-6	10'-0	11'-6	5'-6	7'-0	8'-0	9'-6	11'-0	5'-6	6'-6	8'-0	9'-0	10'-6	5'-0	6'-6	7'-6	8'-6	10'-0	5'-0	6'-0	7'-0	8'-6	9'-6
	F	1'-4	2'-0	2'-9	3'-5	4'-1	1'-6	2'-2	2'-11	3'-8	4'-4	1'-7	2'-4	3'-1	3'-10	4'-7	1'-8	2'-5	3'-3	3'-11	4'-9	1'-8	2'-6	3'-4	4'-1	4'-10
	G	8'-0	10'-0	11'-6	13'-6	15'-6	8'-6	10'-6	12'-6	14'-6	16'-6	9'-0	11'-0	13'-6	15'-6	17'-6	10'-0	12'-0	14'-6	17'-0	19'-6	10'-6	13'-6	16'-0	18'-6	21'-0
	J	1'-3	1'-11	2'-8	3'-4	4'-0	1'-5	2'-0	2'-8	3'-5	4'-1	1'-5	2'-2	2'-9	3'-6	4'-2	1'-6	2'-2	2'-11	3'-6	4'-3	1'-6	2'-3	3'-0	3'-8	4'-5
	K	1'-4½	1'-4½	1'-4½	1'-4½	1'-4½	1'-5¼	1'-5¼	1'-5¼	1'-5¼	1'-5¼	1'-6½	1'-6½	1'-6½	1'-6½	1'-6½	1'-8⅜	1'-8⅜	1'-8⅜	1'-8⅜	1'-8⅜	1'-11¼	1'-11¼	1'-11¼	1'-11¼	1'-11¼
	L	1'-1	1'-4	1'-10	2'-1	2'-4	1'-4	1'-7	2'-1	2'-4	2'-7	1'-4	1'-10	2'-1	2'-7	2'-10	1'-7	1'-10	2'-4	2'-10	3'-1	1'-7	2'-1	2'-7	2'-10	3'-4
	M	1'-3	1'-6	2'-0	2'-3	2'-7	1'-4	1'-8	2'-1	2'-5	2'-9	1'-6	1'-11	2'-2	2'-7	3'-1	1'-7	2'-1	2'-5	2'-10	3'-2	1'-10	2'-3	2'-8	3'-2	3'-8

4 : 1 Slope Dimensions	Skew ∡	25°					30°					35°					40°					45°				
	Height H	3'	4'	5'	6'	7'	3'	4'	5'	6'	7'	3'	4'	5'	6'	7'	3'	4'	5'	6'	7'	3'	4'	5'	6'	7'
	A	1'-6	1'-6	1'-6	1'-6	1'-6	1'-6	1'-6	1'-6	1'-6	1'-6	1'-6	1'-6	1'-6	1'-6	1'-6	1'-6	1'-6	1'-6	1'-6	1'-6	1'-6	1'-6	1'-6	1'-6	1'-6
	B	9"	1'-0	1'-1	1'-2	1'-3	9"	1'-0	1'-1	1'-2	1'-3	9"	1'-0	1'-1	1'-2	1'-3	9"	1'-0	1'-1	1'-2	1'-4	9"	1'-0	1'-1	1'-3	1'-7
	C	4"	7"	1'-0	1'-5	1'-10	4"	7"	1'-0	1'-5	1'-10	4"	7"	1'-0	1'-5	1'-10	4"	7"	1'-0	1'-5	1'-9	4"	7"	1'-0	1'-5	1'-7
	D	2'-7	3'-1	3'-7	4'-1	4'-7	2'-7	3'-1	3'-7	4'-1	4'-7	2'-7	3'-1	3'-7	4'-1	4'-7	2'-7	3'-1	3'-7	4'-1	4'-7	2'-7	3'-1	3'-7	4'-2	4'-8
	E	9'-0	11'-0	13'-6	15'-6	17'-6	8'-6	10'-6	12'-6	14'-6	16'-6	7'-6	9'-6	11'-6	13'-6	15'-0	7'-0	9'-0	10'-6	12'-6	14'-0	7'-0	8'-6	10'-0	12'-0	13'-6
	F	1'-2	1'-10	2'-5	3'-1	3'-9	1'-2	1'-10	2'-6	3'-3	3'-11	1'-2	1'-11	2'-7	3'-3	4'-0	1'-3	1'-11	2'-7	3'-4	4'-0	1'-3	1'-11	2'-8	3'-6	4'-2
	G	12'-0	14'-6	17'-6	20'-6	23'-6	12'-6	15'-6	18'-6	21'-6	24'-6	13'-0	16'-0	19'-6	22'-6	25'-6	14'-0	17'-0	20'-6	24'-0	27'-6	15'-0	18'-6	22'-0	25'-6	29'-0
	J	1'-1	1'-9	2'-4	3'-0	3'-8	1'-1	1'-9	2'-4	3'-0	3'-8	1'-1	1'-9	2'-4	3'-0	3'-8	1'-1	1'-9	2'-4	3'-0	3'-8	1'-1	1'-9	2'-4	3'-1	3'-9
	K	1'-4½	1'-4½	1'-4½	1'-4½	1'-4½	1'-5¼	1'-5¼	1'-5¼	1'-5¼	1'-5¼	1'-6½	1'-6½	1'-6½	1'-6½	1'-6½	1'-8⅜	1'-8⅜	1'-8⅜	1'-8⅜	1'-8⅜	1-11¼	1'-11¼	1'-11¼	1'-11¼	1'-11¼
	L	1'-10	2'-4	2'-8	3'-2	3'-8	1'-11	2'-5	2'-11	3'-5	3'-11	2'-2	2'-8	3'-2	3'-8	4'-4	2'-4	2'-10	3'-5	3'-11	4'-7	2'-4	2'-11	3'-7	4'-1	4'-8
	M	1'-11	2'-6	3'-0	3'-5	3'-11	2'-1	2'-7	3'-1	3'-7	4'-2	2'-2	2'-9	3'-3	3'-10	4'-5	2'-4	2'-11	3'-6	4'-1	4'-8	2'-6	3'-1	3'-9	4'-4	5'-0

6 : 1 Slope Dimensions	Skew ∡	25°					30°					35°					40°					45°				
	Height H	3'	4'	5'	6'	7'	3'	4'	5'	6'	7'	3'	4'	5'	6'	7'	3'	4'	5'	6'	7'	3'	4'	5'	6'	7'
	A	1'-6	1'-6	1'-6	1'-6	1'-6	1'-6	1'-6	1'-6	1'-6	1'-6	1'-6	1'-6	1'-6	1'-6	1'-6	1'-6	1'-6	1'-6	1'-6	1'-6	1'-6	1'-6	1'-6	1'-6	1'-6
	B	9"	1'-0	1'-1	1'-2	1'-4	9"	1'-0	1'-1	1'-2	1'-6	9"	1'-0	1'-1	1'-3	1'-7	9"	1'-0	1'-1	1'-4	1'-8	9"	1'-0	1'-2	1'-6	1'-10
	C	3"	6"	11"	1'-4	1'-8	3"	6"	11"	1'-4	1'-6	3"	6"	11"	1'-3	1'-5	3"	6"	11"	1'-2	1'-4	3"	6"	10"	1'-0	1'-2
	D	2'-6	3'-0	3'-6	4'-0	4'-6	2'-6	3'-0	3'-6	4'-0	4'-6	2'-6	3'-0	3'-6	4'-0	4'-6	2'-6	3'-0	3'-6	4'-0	4'-6	2'-6	3'-0	3'-6	4'-0	4'-6
	E	11'-0	13'-6	16'-0	19'-0	21'-6	10'-0	12'-6	14'-6	17'-0	19'-6	9'-0	11'-6	13'-6	15'-6	18'-0	8'-6	10'-6	12'-6	14'-6	16'-6	8'-0	10'-0	12'-0	13'-6	15'-6
	F	1'-0	1'-8	2'-4	3'-0	3'-8	1'-1	1'-9	2'-5	3'-1	3'-9	1'-1	1'-9	2'-6	3'-2	3'-10	1'-1	1'-10	2'-6	3'-3	3'-11	1'-1	1'-10	2'-6	3'-3	3'-11
	G	14'-0	17'-6	21'-0	24'-6	28'-0	14'-6	18'-6	22'-0	25'-6	29'-0	15'-6	19'-0	23'-0	26'-6	30'-6	16'-0	20'-0	24'-0	28'-0	32'-0	17'-0	21'-0	25'-0	29'-6	33'-6
	J	1'-0	1'-7	2'-3	2'-11	3'-6	1'-0	1'-7	2'-3	2'-11	3'-6	1'-0	1'-7	2'-3	2'-11	3'-6	1'-0	1'-7	2'-3	2'-11	3'-6	1'-0	1'-7	2'-3	2'-11	3'-6
	K	1'-4½	1'-4½	1'-4½	1'-4½	1'-4½	1'-5¼	1'-5¼	1'-5¼	1'-5¼	1'-5¼	1'-6½	1'-6½	1'-6½	1'-6½	1'-6½	1'-8⅜	1'-8⅜	1'-8⅜	1'-8⅜	1'-8⅜	1'-11¼	1'-11¼	1'-11¼	1'-11¼	1'-11¼
	L	2'-3	2'-10	3'-5	3'-11	4'-6	2'-5	3'-0	3'-8	4'-3	4'-10	2'-7	3'-2	3'-10	4'-6	5'-1	2'-8	3'-4	4'-0	4'-8	5'-4	2'-9	3'-5	4'-1	4'-10	5'-6
	M	2'-5	3'-0	3'-7	4'-2	4'-9	2'-6	3'-1	3'-8	4'-4	4'-11	2'-7	3'-3	3'-10	4'-6	5'-2	2'-9	3'-5	4'-1	4'-9	5'-5	2'-10	3'-7	4'-4	5'-0	5'-8

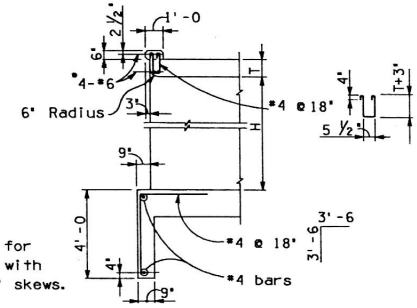

*Use 4-#7 for 10' spans with 35° to 45° skews.

SECTION A-A

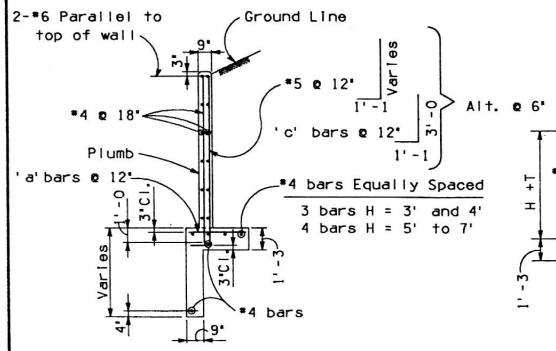

SECTION B-B

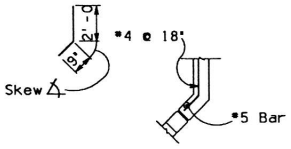

SECTION C-C

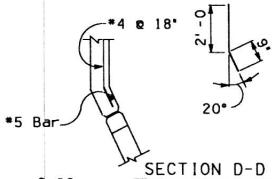

SECTION D-D

H = 7'	'c' Bars Long Wingwall	
Skew ∡	2 : 1 Slope	4 : 1 Slope
25°	3 - #5	3 - #5
30°	3 - #5	3 - #5
35°	4 - #5	4 - #5
40°	4 - #5	4 - #5
45°	5 - #5	4 - #5

'a' Bars		
Height H	Short Wing	Long Wing
3'	#4	#4
4'	#4	#4
5'	#4	#4
6'	#4	#5
7'	#4	#6

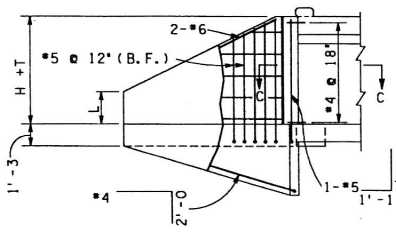

SHORT WING ELEVATION

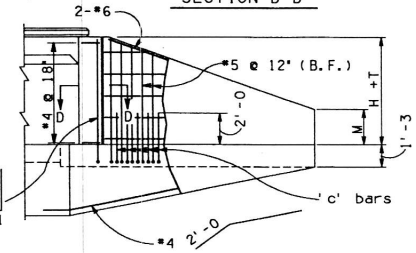

LONG WING ELEVATION

NOTE :

For General Notes and Miscellaneous Details see B-01.10.
For Headwall Quantities see B-05.10, B-05.20 and B-05.30.

	DESIGN APPROVED	ARIZONA DEPARTMENT OF TRANSPORTATION HIGHWAYS DIVISION STANDARD DRAWINGS	REVISION
	APPROVED FOR DISTRIBUTION	INLET WINGS CULVERT HEIGHT 3' to 7' SKEW 25° to 45°	STANDARD NO. B-04.70

CADD FILENAME= ZFA
VIEW NAME=

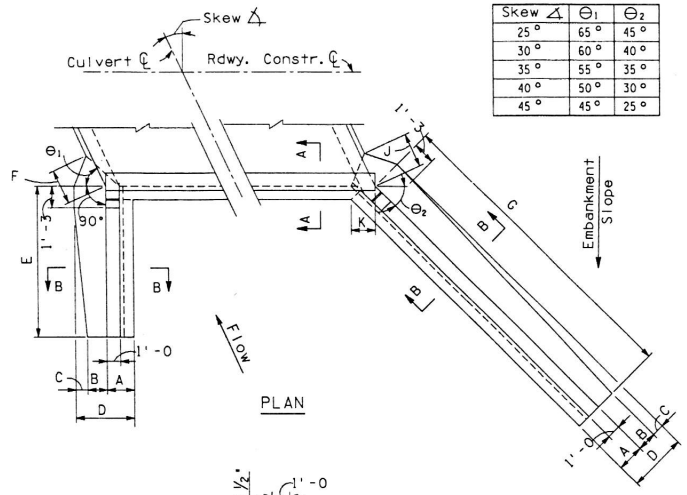

Skew ∆	Θ_1	Θ_2
25°	65°	45°
30°	60°	40°
35°	55°	35°
40°	50°	30°
45°	45°	25°

	Skew ∆	25°					30°					35°					40°					45°				
	Height H	8'	9'	10'	11'	12'	8'	9'	10'	11'	12'	8'	9'	10'	11'	12'	8'	9'	10'	11'	12'	8'	9'	10'	11'	12'
2 : 1 Slope Dimensions	A	2'-0	2'-1	2'-2	2'-3	2'-4	2'-0	2'-1	2'-2	2'-3	2'-4	2'-0	2'-1	2'-2	2'-3	2'-4	2'-0	2'-1	2'-2	2'-3	2'-4	2'-0	2'-1	2'-2	2'-3	2'-4
	B	1'-4	1'-5	1'-6	1'-7	1'-8	1'-4	1'-5	1'-6	1'-7	1'-8	1'-4	1'-5	1'-6	1'-7	1'-8	1'-4	1'-5	1'-6	1'-7	1'-8	1'-4	1'-5	1'-6	1'-7	1'-9
	C	2'-2	2'-7	3'-0	3'-8	4'-5	2'-3	2'-8	3'-1	3'-9	4'-7	2'-4	2'-9	3'-2	3'-11	4'-9	2'-5	2'-10	3'-4	4'-[illegible]1	4'-11	2'-6	2'-11	3'-5	4'-2	5'-0
	D	5'-6	6'-1	6'-8	7'-6	8'-5	5'-7	6'-2	6'-9	7'-7	8'-7	5'-8	6'-3	6'-10	7'-9	8'-9	5'-9	6'-4	7'-0	7'-11	8'-11	5'-10	6'-5	7'-1	8'-0	9'-1
	E	13'-0	14'-6	15'-6	17'-0	18'-6	12'-0	13'-6	15'-0	16'-0	17'-6	11'-6	13'-0	14'-0	15'-6	16'-6	11'-0	12'-6	13'-6	15'-0	16'-0	11'-0	12'-0	13'-0	14'-6	15'-6
	F	4'-4	5'-0	5'-8	6'-8	7'-9	4'-7	5'-3	5'-11	7'-0	8'-3	4'-10	5'-6	6'-2	7'-4	8'-8	5'-0	5'-8	6'-6	7'-8	9'-0	5'-1	5'-10	6'-8	7'-10	9'-3
	G	17'-6	19'-6	21'-0	23'-0	25'-0	18'-6	20'-6	22'-6	24'-6	26'-6	20'-0	22'-0	24'-6	26'-6	28'-6	21'-6	24'-0	26'-6	29'-0	31'-0	24'-0	26'-6	29'-0	31'-6	34'-6
	J	4'-2	4'-10	5'-5	6'-5	7'-6	4'-3	4'-11	5'-7	6'-6	7'-8	4'-5	5'-0	5'-8	6'-9	7'-11	4'-6	5'-2	5'-11	6'-11	8'-2	4'-7	5'-3	6'-0	7'-1	8'-4
	K	2'-0⅞	2'-2⅜	2'-3¾	2'-5⅛	2'-6⅝	2'-2⅝	2'-4⅛	2'-5¾	2'-7¼	2'-8⅞	2'-5	2'-6¾	2'-8½	2'-10¼	3'-0	2'-8⅜	2'-10⅜	3'-0⅜	3'-2⅜	3'-4⅜	3'-1½	3'-3⅜	3'-6¼	3'-8⅝	3'-11
	L	2'-7	2'-10	3'-4	3'-7	3'-10	3'-1	3'-4	3'-7	4'-1	4'-4	3'-4	3'-7	4'-1	4'-4	4'-10	3'-7	3'-10	4'-4	4'-7	5'-1	3'-7	4'-1	4'-7	4'-10	5'-4
	M	2'-11	3'-2	3'-8	3'-11	4'-3	3'-1	3'-6	3'-10	4'-2	4'-7	3'-4	3'-9	4'-0	4'-6	4'-11	3'-8	4'-1	4'-5	4'-10	5'-4	4'-0	4'-6	4'-11	5'-5	5'-9

	Skew ∆	25°					30°					35°					40°					45°				
	Height H	8'	9'	10'	11'	12'	8'	9'	10'	11'	12'	8'	9'	10'	11'	12'	8'	9'	10'	11'	12'	8'	9'	10'	11'	12'
4 : 1 Slope Dimensions	A	2'-0	2'-1	2'-2	2'-3	2'-4	2'-0	2'-1	2'-2	2'-3	2'-4	2'-0	2'-1	2'-2	2'-3	2'-4	2'-0	2'-1	2'-2	2'-3	2'-4	2'-0	2'-1	2'-2	2'-3	2'-4
	B	1'-4	1'-5	1'-6	1'-7	1'-8	1'-4	1'-5	1'-6	1'-7	1'-9	1'-4	1'-5	1'-6	1'-9	1'-11	1'-4	1'-6	1'-9	1'-11	2'-2	1'-6	1'-9	2'-0	2'-3	2'-5
	C	1'-10	2'-2	2'-6	3'-1	3'-9	1'-10	2'-2	2'-7	3'-1	3'-8	1'-11	2'-3	2'-7	2'-11	3'-7	1'-11	2'-2	2'-4	2'-10	3'-4	1'-9	1'-11	2'-1	2'-6	3'-2
	D	5'-2	5'-8	6'-2	6'-11	7'-9	5'-2	5'-8	6'-3	6'-11	7'-9	5'-3	5'-9	6'-3	6'-11	7'-10	5'-3	5'-9	6'-3	7'-0	7'-10	5'-3	5'-9	6'-3	7'-0	7'-11
	E	20'-0	22'-0	24'-0	22'-6	28'-6	18'-6	20'-6	22'-6	24'-6	26'-6	17'-0	19'-0	20'-6	22'-6	24'-6	16'-0	17'-6	19'-6	21'-0	23'-0	15'-0	17'-0	18'-6	20'-0	22'-0
	F	3'-11	4'-5	5'-0	5'-11	6'-11	4'-0	4'-7	5'-3	6'-1	7'-1	4'-3	4'-10	5'-5	6'-2	7'-4	4'-3	4'-10	5'-5	6'-5	7'-5	4'-3	4'-10	5'-6	6'-5	7'-7
	G	26'-0	29'-0	32'-0	35'-0	37'-6	27'-6	30'-6	33'-6	36'-6	39'-6	29'-0	32'-0	35'-6	38'-6	41'-6	30'-6	34'-0	37'-6	41'-0	44'-0	33'-0	36'-6	40'-0	43'-6	47'-6
	J	3'-9	4'-3	4'-10	5'-8	6'-8	3'-9	4'-3	4'-11	5'-8	6'-8	3'-10	4'-5	4'-11	5'-8	6'-9	3'-10	4'-5	4'-11	5'-9	6'-9	3'-10	4'-5	4'-11	5'-9	6'-10
	K	2'-0⅞	2'-2⅜	2'-3¾	2'-5⅛	2'-6⅝	2'-2⅝	2'-4⅛	2'-5¾	2'-7¼	2'-8⅞	2'-5	2'-6¾	2'-8½	2'-10¼	3'-0	2'-8⅜	2'-10⅜	3'-0⅜	3'-2⅜	3'-4⅜	3'-1½	3'-3⅜	3'-6¼	3'-8⅝	3'-11
	L	4'-1	4'-7	5'-1	5'-5	5'-11	4'-5	4'-11	5'-5	5'-11	6'-5	4'-10	5'-4	5'-11	6'-5	6'-11	5'-1	5'-8	6'-2	6'-10	7'-4	5'-4	5'-10	6'-5	7'-1	7'-7
	M	4'-6	4'-11	5'-5	5'-11	6'-5	4'-8	5'-2	5'-8	6'-2	6'-9	4'-11	5'-6	6'-0	6'-7	7'-1	5'-3	5'-10	6'-5	6'-11	7'-7	5'-7	6'-2	6'-10	7'-6	8'-1

	Skew ∆	25°	30°	35°	40°	45°
	Height H	8'	8'	8'	8'	8'
6 : 1 Slope Dimensions	A	2'-0	2'-0	2'-0	2'-0	2'-0
	B	1'-4	1'-4	1'-6	1'-8	1'-10
	C	1'-9	1'-9	1'-7	1'-5	1'-3
	D	5'-1	5'-1	5'-1	5'-1	5'-1
	E	24'-0	22'-0	20'-0	18'-6	17'-6
	F	3'-9	3'-11	4'-0	4'-0	4'-1
	G	31'-6	32'-6	34'-0	35'-6	37'-6
	J	3'-8	3'-8	3'-8	3'-8	3'-8
	K	2'-0⅞	2'-2⅝	2'-5	2'-8⅜	3'-1½
	L	5'-1	5'-5	5'-9	6'-0	6'-2
	M	5'-4	5'-7	5'-10	6'-1	6'-5

		'c' Bars								'd' Bars	
		Long Wing						Short Wing		Long Wing	Short Wing
	Height H	Skew ∆ 25°	30°	35°	40°	45°	Dim. 'X'	All Skew ∆	Dim. 'X'	All Skew ∆	
2:1 Slope	8'	4 -*5	4 -*5	5 -*5	5 -*5	6 -*5	2'-3	-	-	-	-
	9'	6 -*5	7 -*5	8 -*5	9 -*5	10 -*5	3'-3	2 -*5	2'-3	4 -*5	-
	10'	9 -*7	10 -*7	11 -*7	13 -*7	15 -*7	6'-0	4 -*5	3'-3	8 -*5	-
	11'	11 -*7	12 -*7	14 -*7	16 -*7	19 -*7	7'-0	6 -*6	4'-3	13 -*7	3 -*5
	12'	7 -*7	8 -*7	9 -*7	10 -*7	12 -*7	5'-3	6 -*6	4'-6	9 -*7	5 -*5
4:1 Slope	8'	3 -*5	4 -*5	4 -*5	5 -*5	5 -*5	2'-3	-	-	-	-
	9'	8 -*5	9 -*5	10 -*5	11 -*5	13 -*5	2'-6	4 -*5	2'-3	-	-
	10'	14 -*6	15 -*6	17 -*6	19 -*6	23 -*6	3'-9	8 -*5	3'-3	-	-
	11'	19 -*7	21 -*7	24 -*7	27 -*7	31 -*7	6'-3	12 -*6	4'-3	10 -*5	5 -*5
	12'	10 -*5	11 -*5	12 -*5	14 -*5	16 -*5	2'-9	12 -*6	4'-6	8 -*5	8 -*5

• 'd' bars alternate with 'a' bars at high end of wall

'e' Bars		
Skew ∆	Span 8'	Span 10'	Span 12'
25° to 30°	*6	*6	*7
35°	*6	*7	*8
40° & 45°	*6	*7	*9

Height H	Short Wing 'a' Bars	Short Wing 'b' Bars	Long Wing 'a' Bars	Long Wing 'b' Bars
8'	*4	*5	*6	*5
9'	*5	*5	*6	*5
10'	*6	*5	*6	*5
11'	*6	*5	*6	*5
12'	*6	*6	*7	*7

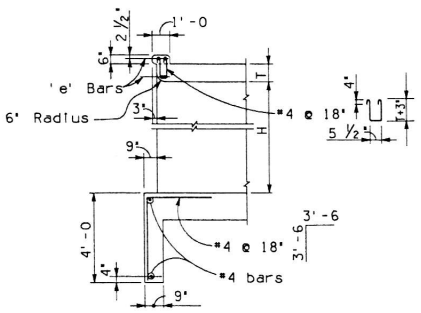

SECTION A-A

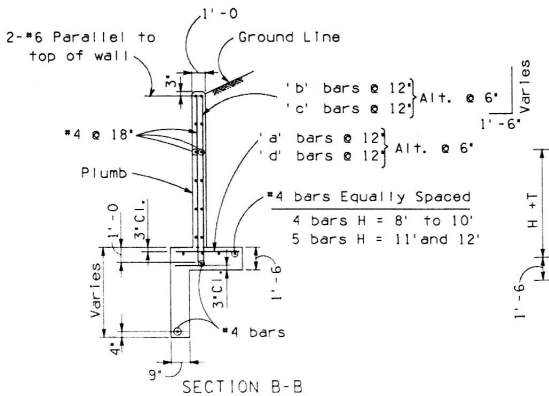

SECTION B-B

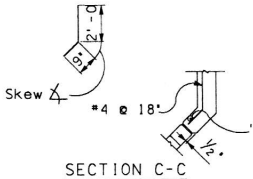

SECTION C-C

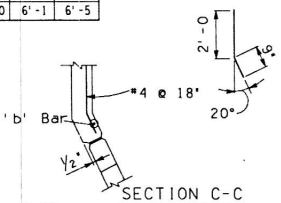

SECTION C-C

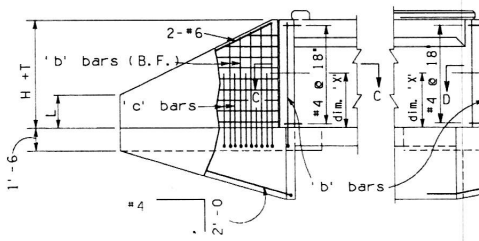

SHORT WING ELEVATION

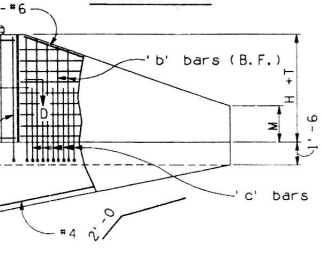

LONG WING ELEVATION

NOTE:

For General Notes and Miscellaneous Details see B-01.10.
For Headwall Quantities see B-05.10, B-05.20 and B-05.30.

DESIGN APPROVED	ARIZONA DEPARTMENT OF TRANSPORTATION HIGHWAYS DIVISION STANDARD DRAWINGS	REVISION
APPROVED FOR DISTRIBUTION	INLET WINGS CULVERT HEIGHT 8' to 12' SKEW 25° to 45°	STANDARD NO. B-04.80

CADD FILENAME: 2FA
VIEW NAME:

INLET WINGS

Span	Hgt.	0°Skew				5°Skew				10°Skew				15°Skew				20°Skew				25°Skew				30°Skew				35°Skew				40°Skew				45°Skew			
		Conc. C.Y.		Steel lbs.		Conc. C.Y.		Steel lbs.		Conc. C.Y.		Steel lbs.		Conc. C.Y.		Steel lbs.		Conc. C.Y.		Steel lbs.		Conc. C.Y.		Steel lbs.		Conc. C.Y.		Steel lbs.		Conc. C.Y.		Steel lbs.		Conc. C.Y.		Steel lbs.		Conc. C.Y.		Steel lbs.	
		1 Bbl.	Δc	1 Bbl.	Δs	1 Bbl.	Δc	1 Bbl.	Δs	1 Bbl.	Δc	1 Bbl.	Δs	1 Bbl.	Δc	1 Bbl.	Δs	1 Bbl.	Δc	1 Bbl.	Δs	1 Bbl.	Δc	1 Bbl.	Δs	1 Bbl.	Δc	1 Bbl.	Δs	1 Bbl.	Δc	1 Bbl.	Δs	1 Bbl.	Δc	1 Bbl.	Δs	1 Bbl.	Δc	1 Bbl.	Δs
6'	3'	3.81	.86	276	80	3.66	.87	271	80	3.73	.88	281	81	3.81	.89	284	83	4.00	.92	302	85	4.11	.95	303	88	4.23	1.00	320	93	4.44	1.05	332	98	4.71	1.13	341	105	4.97	1.22	369	113
	4'	5.18	.86	376	80	5.00	.87	357	80	5.07	.88	356	81	5.16	.89	368	83	5.38	.92	391	85	5.61	.95	405	88	5.76	1.00	417	93	5.94	1.05	423	98	6.32	1.13	449	105	6.80	1.22	484	113
	5'	6.52	.86	452	80	6.59	.87	457	80	6.65	.88	468	81	6.75	.89	470	83	7.00	.92	487	85	7.14	.95	503	88	7.39	1.00	523	93	7.83	1.05	550	98	8.20	1.13	574	105	8.75	1.22	597	113
	6'	8.26	.86	552	80	8.34	.87	570	80	8.28	.88	564	81	8.67	.89	570	83	8.80	.92	585	85	9.08	.95	608	88	9.44	1.00	637	93	9.80	1.05	654	98	10.30	1.13	681	105	11.07	1.22	747	113
	7'	10.26	.86	774	80	10.18	.87	748	80	10.25	.88	763	81	10.52	.89	735	83	10.96	.92	764	85	11.28	.95	790	88	11.67	1.00	821	93	12.11	1.05	857	98	12.88	1.13	900	105	13.61	1.22	956	113
8'	3'	4.11	1.13	318	105	3.95	1.14	311	106	4.02	1.15	322	107	4.11	1.17	332	109	4.31	1.21	352	112	4.43	1.25	356	116	4.57	1.31	367	121	4.80	1.38	386	128	5.09	1.48	398	137	5.38	1.60	429	149
	4'	5.47	1.13	397	105	5.29	1.14	380	106	5.37	1.15	381	107	5.47	1.17	400	109	5.69	1.21	423	112	5.93	1.25	438	116	6.10	1.31	444	121	6.30	1.38	458	128	6.70	1.48	485	137	7.22	1.60	523	149
	5'	6.81	1.13	477	105	6.88	1.14	482	106	6.95	1.15	493	107	7.06	1.17	499	109	7.31	1.21	520	112	7.47	1.25	532	116	7.73	1.31	551	121	8.19	1.38	586	128	8.59	1.48	611	137	9.17	1.60	635	149
	6'	8.56	1.13	604	105	8.64	1.14	620	106	8.58	1.15	617	107	8.98	1.17	633	109	9.12	1.21	649	112	9.41	1.25	674	116	9.78	1.31	698	121	10.16	1.38	723	128	10.68	1.48	753	137	11.49	1.60	823	149
	7'	10.55	1.13	791	105	10.48	1.14	773	106	10.55	1.15	788	107	10.83	1.17	767	109	11.28	1.21	798	112	11.61	1.25	824	116	12.02	1.31	849	121	12.48	1.38	893	128	13.27	1.48	937	137	14.03	1.60	995	149
	8'	15.95	1.13	892	105	15.73	1.14	909	106	16.04	1.15	922	107	16.18	1.17	935	109	16.76	1.21	948	112	17.40	1.25	1016	116	17.75	1.31	1037	121	18.60	1.38	1086	128	19.50	1.48	1150	137	21.19	1.60	1247	149
10'	3'	4.41	1.40	358	130	4.25	1.41	352	131	4.33	1.43	362	132	4.42	1.45	365	135	4.63	1.49	388	139	4.76	1.55	395	144	4.92	1.62	412	150	5.16	1.71	456	188	5.48	1.83	476	201	5.80	1.99	510	217
	4'	5.77	1.40	440	130	5.59	1.41	422	131	5.68	1.43	424	132	5.78	1.45	437	135	6.01	1.49	462	139	6.27	1.55	480	144	6.45	1.62	492	150	6.67	1.71	531	188	7.10	1.83	569	201	7.64	1.99	607	217
	5'	7.11	1.40	521	130	7.18	1.41	526	131	7.26	1.43	539	132	7.37	1.45	538	135	7.64	1.49	560	139	7.81	1.55	576	144	8.08	1.62	593	150	8.56	1.71	659	188	8.98	1.83	697	201	9.59	1.99	722	217
	6'	8.86	1.40	651	130	8.94	1.41	667	131	8.88	1.43	664	132	9.29	1.45	675	135	9.44	1.49	691	139	9.75	1.55	720	144	10.13	1.62	750	150	10.53	1.71	800	188	11.08	1.83	842	201	11.91	1.99	913	217
	7'	10.86	1.40	840	130	10.78	1.41	822	131	10.86	1.43	837	132	11.14	1.45	811	135	11.60	1.49	843	139	11.95	1.55	866	144	12.37	1.62	899	150	12.85	1.71	973	188	13.67	1.83	1029	201	14.46	1.99	1088	217
	8'	16.25	1.40	943	130	16.04	1.41	961	131	16.35	1.43	974	132	16.50	1.45	981	135	17.10	1.49	996	139	17.76	1.55	1067	144	18.12	1.62	1094	150	18.99	1.71	1169	188	19.92	1.83	1240	201	21.64	1.99	1338	217
	9'	19.48	1.40	1210	130	19.29	1.41	1182	131	19.36	1.43	1195	132	19.99	1.45	1225	135	20.60	1.49	1273	139	21.30	1.55	1334	144	21.76	1.62	1371	150	22.69	1.71	1429	188	23.99	1.83	1531	201	25.67	1.99	1633	217
	10'	23.08	1.40	1412	130	22.84	1.41	1435	131	22.95	1.43	1431	132	23.30	1.45	1439	135	24.00	1.49	1497	139	24.76	1.55	1641	144	25.72	1.62	1714	150	26.76	1.71	1806	188	28.34	1.83	1961	201	30.18	1.99	2070	217
12'	8'	16.59	1.69	972	156	16.36	1.69	991	157	16.71	1.71	1004	159	16.86	1.74	1007	162	17.48	1.79	1034	196	18.15	1.86	1104	204	18.52	1.95	1130	213	19.42	2.06	1179	265	20.37	2.20	1236	334	22.13	2.38	1348	361
	9'	19.82	1.69	1240	156	19.63	1.69	1205	157	19.71	1.71	1226	159	20.35	1.74	1258	162	20.99	1.79	1312	196	21.70	1.86	1362	204	22.16	1.95	1407	213	23.12	2.06	1440	265	24.45	2.20	1537	334	26.16	2.38	1643	361
	10'	23.42	1.69	1442	156	23.18	1.69	1465	157	23.24	1.71	1454	159	23.66	1.74	1473	162	24.38	1.79	1526	196	25.15	1.86	1678	204	26.13	1.95	1751	213	27.18	2.06	1817	265	28.79	2.20	1968	334	30.67	2.38	2080	361
	11'	27.28	1.69	1828	156	27.16	1.69	1852	157	27.49	1.71	1865	159	28.02	1.74	1882	162	29.01	1.79	1938	196	29.83	1.86	2111	204	30.66	1.95	2193	213	32.29	2.06	2334	265	34.32	2.20	2460	334	36.40	2.38	2678	361
	12'	32.13	1.69	2526	156	32.03	1.69	2498	157	32.41	1.71	2518	159	33.16	1.74	2480	162	34.22	1.79	2581	196	35.14	1.86	2714	204	36.25	1.95	2828	213	37.74	2.06	2988	265	39.97	2.20	3103	334	43.12	2.38	3421	361

OUTLET WINGS

Span	Hgt.	0°Skew				5°Skew				10°Skew				15°Skew				20°Skew				25°Skew				30°Skew				35°Skew				40°Skew				45°Skew			
		Conc. C.Y.		Steel lbs.		Conc. C.Y.		Steel lbs.		Conc. C.Y.		Steel lbs.		Conc. C.Y.		Steel lbs.		Conc. C.Y.		Steel lbs.		Conc. C.Y.		Steel lbs.		Conc. C.Y.		Steel lbs.		Conc. C.Y.		Steel lbs.		Conc. C.Y.		Steel lbs.		Conc. C.Y.		Steel lbs.	
		1 Bbl.	Δc	1 Bbl.	Δs	1 Bbl.	Δc	1 Bbl.	Δs	1 Bbl.	Δc	1 Bbl.	Δs	1 Bbl.	Δc	1 Bbl.	Δs	1 Bbl.	Δc	1 Bbl.	Δs	1 Bbl.	Δc	1 Bbl.	Δs	1 Bbl.	Δc	1 Bbl.	Δs	1 Bbl.	Δc	1 Bbl.	Δs	1 Bbl.	Δc	1 Bbl.	Δs	1 Bbl.	Δc	1 Bbl.	Δs
6'	3'	5.98	1.55	467	135	5.98	1.56	468	135	6.19	1.58	475	137	6.07	1.61	464	140	6.31	1.65	485	143	6.58	1.71	495	149	6.73	1.79	520	156	7.05	1.90	538	165	7.43	2.03	555	177	7.82	2.20	598	191
	4'	7.72	1.55	574	135	7.71	1.56	574	135	7.96	1.58	592	137	8.00	1.61	600	140	8.28	1.65	619	143	8.56	1.71	630	149	8.74	1.79	651	156	8.96	1.90	658	165	9.53	2.03	696	177	10.21	2.20	751	191
	5'	9.61	1.55	707	135	9.80	1.56	713	135	9.90	1.58	716	137	9.94	1.61	724	140	10.26	1.65	734	143	10.44	1.71	752	149	10.78	1.79	786	156	11.40	1.90	824	165	11.89	2.03	855	177	12.63	2.20	897	191
	6'	11.75	1.55	807	135	11.94	1.56	826	135	12.23	1.58	852	137	12.37	1.61	871	140	12.66	1.65	882	143	12.86	1.71	890	149	13.31	1.79	933	156	13.79	1.90	956	165	14.47	2.03	995	177	15.50	2.20	1086	191
	7'	14.08	1.55	976	135	14.29	1.56	981	135	14.63	1.58	1050	137	14.77	1.61	1040	140	15.17	1.65	1077	143	15.54	1.71	1107	149	16.02	1.79	1151	156	16.58	1.90	1192	165	17.60	2.03	1252	177	18.52	2.20	1328	191
8'	3'	6.50	2.02	525	177	6.51	2.03	525	178	6.73	2.05	534	180	6.61	2.09	536	184	6.87	2.15	559	189	7.16	2.23	570	196	7.34	2.34	582	204	7.68	2.47	616	216	8.11	2.64	636	231	8.55	2.86	683	251
	4'	8.25	2.02	613	177	8.24	2.03	613	178	8.50	2.05	632	180	8.55	2.09	654	184	8.84	2.15	674	189	9.14	2.23	686	196	9.35	2.34	694	204	9.60	2.47	717	216	10.21	2.64	757	231	10.94	2.86	815	251
	5'	10.14	2.02	746	177	10.34	2.03	753	178	10.44	2.05	756	180	10.49	2.09	779	184	10.82	2.15	789	189	11.02	2.23	804	196	11.39	2.34	829	204	12.05	2.47	883	216	12.58	2.64	916	231	13.38	2.86	961	251
	6'	12.28	2.02	877	177	12.48	2.03	896	178	12.78	2.05	924	180	12.93	2.09	958	184	13.23	2.15	970	189	13.45	2.23	979	196	13.93	2.34	1010	204	14.43	2.47	1049	216	15.16	2.64	1092	231	16.25	2.86	1187	251
	7'	14.62	2.02	1016	177	14.84	2.03	1021	178	15.18	2.05	1091	180	15.33	2.09	1095	184	15.74	2.15	1126	189	16.13	2.23	1163	196	16.65	2.34	1195	204	17.23	2.47	1253	216	18.30	2.64	1314	231	19.27	2.86	1393	251
	8'	20.30	2.02	1278	177	20.18	2.03	1256	178	20.48	2.05	1270	180	20.72	2.09	1316	184	21.49	2.15	1360	189	22.12	2.23	1389	196	22.50	2.34	1412	204	23.53	2.47	1479	216	24.62	2.64	1556	231	26.70	2.86	1688	251
10'	3'	7.06	2.51	589	220	7.06	2.52	589	221	7.29	2.55	598	223	7.19	2.59	586	228	7.46	2.67	610	235	7.77	2.77	625	243	7.97	2.89	851	254	8.36	3.06	702	298	8.83	3.27	739	318	9.33	3.54	781	344
	4'	8.80	2.51	679	220	8.80	2.52	679	221	9.06	2.55	696	223	9.13	2.59	707	228	9.43	2.67	728	235	9.76	2.77	744	243	9.99	2.89	765	254	10.27	3.06	806	298	10.93	3.27	865	318	11.72	3.54	917	344
	5'	10.70	2.51	814	220	10.90	2.52	821	221	11.01	2.55	825	223	11.07	2.59	834	228	11.42	2.67	845	235	11.64	2.77	863	243	12.04	2.89	895	254	12.72	3.06	973	298	13.30	3.27	1027	318	14.16	3.54	1066	344
	6'	12.84	2.51	947	220	13.04	2.52	967	221	13.35	2.55	996	223	13.51	2.59	1016	228	13.82	2.67	1029	235	14.07	2.77	1041	243	14.57	2.89	1085	254	15.11	3.06	1143	298	15.88	3.27	1205	318	17.04	3.54	1295	344
	7'	15.18	2.51	1088	220	15.40	2.52	1094	221	15.75	2.55	1165	223	15.91	2.59	1155	228	16.34	2.67	1187	235	16.75	2.77	1221	243	17.30	2.89	1268	254	17.91	3.06	1350	298	19.03	3.27	1430	318	20.06	3.54	1503	344
	8'	20.88	2.51	1354	220	20.77	2.52	1332	221	21.08	2.55	1346	223	21.32	2.59	1378	228	22.11	2.67	1424	235	22.76	2.77	1456	243	23.17	2.89	1492	254	24.23	3.06	1579	298	25.37	3.27	1670	318	27.51	3.54	1797	344
	9'	24.31	2.51	1530	220	24.44	2.52	1560	221	24.89	2.55	1567	223	25.17	2.59	1584	228	26.06	2.67	1632	235	26.75	2.77	1756	243	27.25	2.89	1801	254	28.38	3.06	1872	298	29.95	3.27	2000	318	31.98	3.54	2125	344
	10'	27.99	2.51	1830	220	28.14	2.52	1827	221	28.65	2.55	1860	223	28.94	2.59	1872	228	29.90	2.67	1935	235	30.52	2.77	2086	243	31.65	2.89	2178	254	32.88	3.06	2283	298	34.73	3.27	2463	318	36.92	3.54	2595	344
12'	8'	21.47	2.98	1385	264	21.36	2.99	1377	265	21.68	3.02	1386	268	21.93	3.08	1427	274	22.74	3.17	1486	311	23.40	3.29	1516	323	23.83	3.44	1545	337	24.93	3.64	1614	397	26.11	3.89	1684	475	28.32	4.21	1833	513
	9'	24.90	2.98	1576	264	25.04	2.99	1606	265	25.49	3.02	1614	268	25.78	3.08	1634	274	26.68	3.17	1694	311	27.40	3.29	1808	323	27.92	3.44	1855	337	29.08	3.64	1908	397	30.70	3.89	2024	475	32.79	4.21	2165	513
	10'	28.58	2.98	1876	264	28.74	2.99	1873	265	29.25	3.02	1898	268	29.55	3.08	1922	274	30.52	3.17	1998	311	31.16	3.29	2148	323	32.32	3.44	2232	337	33.58	3.64	2319	397	35.48	3.89	2488	475	37.73	4.21	2632	513
	11'	32.86	2.98	2175	264	33.17	2.99	2235	265	33.71	3.02	2243	268	34.51	3.08	2285	274	35.56	3.17	2344	311	36.27	3.29	2614	323	37.22	3.44	2703	337	39.12	3.64	2869	397	41.50	3.89	3018	475	43.95	4.21	3268	513
	12'	37.72	2.98	2866	264	38.11	2.99	2849	265	39.17	3.02	2890	268	39.56	3.08	2968	274	40.87	3.17	3045	311	42.02	3.29	3250	323	43.24	3.44	3372	337	44.93	3.64	3552	397	47.51	3.89	3690	475	51.16	4.21	4049	513

NOTES :

All quantities are for headwalls of barrels shown in Table No. 1 (0-10' Fill).

Quantities are shown for single barrel culvert only.

Multi-barrel culvert headwall quantities are obtained by adding, for each additional barrel, Δs and Δc to the inlet and outlet quantities.

NOTATIONS :

Δc = Inlet or outlet concrete quantity per additional barrel.

Δs = Inlet or outlet steel quantity per additional barrel.

DESIGN APPROVED

APPROVED FOR DISTRIBUTION

ARIZONA DEPARTMENT OF TRANSPORTATION HIGHWAYS DIVISION STANDARD DRAWINGS

HEADWALL QUANTITIES 2 : 1 SLOPE

REVISION 7-88

STANDARD NO. B-05.10

CADD FILENAME= ZFA BOSIO
VIEW NAME= BOS10

INLET WINGS

Span	Hgt.	0° Skew				5° Skew				10° Skew				15° Skew			
		Conc. C.Y.		Steel lbs.		Conc. C.Y.		Steel lbs.		Conc. C.Y.		Steel lbs.		Conc. C.Y.		Steel lbs.	
		1 Bbl.	Δc	1 Bbl.	Δs	1 Bbl.	Δc	1 Bbl.	Δs	1 Bbl.	Δc	1 Bbl.	Δs	1 Bbl.	Δc	1 Bbl.	Δs
6'	3'	4.80	.86	342	80	4.84	.87	351	80	4.92	.88	357	81	5.11	.89	378	83
	4'	6.38	.86	455	80	6.68	.87	475	80	6.77	.88	477	81	7.11	.89	512	83
	5'	8.44	.86	593	80	8.64	.87	613	80	8.88	.88	620	81	9.41	.89	668	83
	6'	10.92	.86	762	80	11.11	.87	774	80	11.47	.88	792	81	11.89	.89	814	83
	7'	13.81	.86	1048	80	14.00	.87	1070	80	14.39	.88	1088	81	14.96	.89	1060	83
8'	3'	5.09	1.13	388	105	5.14	1.14	399	106	5.22	1.15	405	107	5.42	1.17	435	109
	4'	6.68	1.13	480	105	6.98	1.14	500	106	7.08	1.15	503	107	7.42	1.17	542	109
	5'	8.74	1.13	618	105	8.94	1.14	638	106	9.19	1.15	646	107	9.73	1.17	698	109
	6'	11.22	1.13	824	105	11.41	1.14	835	106	11.78	1.15	858	107	12.21	1.17	889	109
	7'	14.11	1.13	1073	105	14.31	1.14	1095	106	14.71	1.15	1114	107	15.28	1.17	1093	109
	8'	20.89	1.13	1168	105	21.54	1.14	1231	106	22.01	1.15	1258	107	23.01	1.17	1332	109
10'	3'	5.40	1.40	432	130	5.45	1.41	443	131	5.54	1.43	450	132	5.74	1.45	474	135
	4'	6.99	1.40	526	130	7.29	1.41	547	131	7.40	1.43	550	132	7.74	1.45	585	135
	5'	9.05	1.40	667	130	9.26	1.41	688	131	9.51	1.43	696	132	10.06	1.45	743	135
	6'	11.53	1.40	876	130	11.73	1.41	887	131	12.10	1.43	912	132	12.55	1.45	937	135
	7'	14.43	1.40	1128	130	14.63	1.41	1151	131	15.04	1.43	1171	132	15.62	1.45	1139	135
	8'	21.23	1.40	1225	130	21.88	1.41	1290	131	22.36	1.43	1318	132	23.37	1.45	1387	135
	9'	25.65	1.40	1580	130	26.36	1.41	1655	131	26.92	1.43	1687	132	27.91	1.45	1756	135
	10'	30.59	1.40	1858	130	31.03	1.41	1892	131	31.90	1.43	1948	132	33.29	1.45	2040	135
12'	8'	21.60	1.69	1254	156	22.26	1.69	1321	157	22.75	1.71	1349	159	23.77	1.74	1413	162
	9'	26.06	1.69	1611	156	26.74	1.69	1687	157	27.31	1.71	1710	159	28.31	1.74	1790	162
	10'	30.96	1.69	1889	156	31.41	1.69	1923	157	32.30	1.71	1980	159	33.70	1.74	2065	162
	11'	36.81	1.69	2573	156	37.27	1.69	2625	157	38.25	1.71	2677	159	39.97	1.74	2777	162
	12'	43.37	1.69	3310	156	43.91	1.69	3374	157	45.07	1.71	3486	159	46.79	1.74	3583	162

Span	Hgt.	20° Skew				25° Skew				30° Skew				35° Skew				40° Skew				45° Skew			
		Conc. C.Y.		Steel lbs.		Conc. C.Y.		Steel lbs.		Conc. C.Y.		Steel lbs.		Conc. C.Y.		Steel lbs.		Conc. C.Y.		Steel lbs.		Conc. C.Y.		Steel lbs.	
		1 Bbl.	Δc	1 Bbl.	Δs	1 Bbl.	Δc	1 Bbl.	Δs	1 Bbl.	Δc	1 Bbl.	Δs	1 Bbl.	Δc	1 Bbl.	Δs	1 Bbl.	Δc	1 Bbl.	Δs	1 Bbl.	Δc	1 Bbl.	Δs
6'	3'	5.40	.92	400	85	5.73	.95	420	88	5.82	1.00	436	93	5.82	1.05	431	98	6.07	1.13	440	105	6.44	1.22	472	113
	4'	7.46	.92	527	85	7.84	.95	560	88	8.06	1.00	590	93	8.06	1.05	580	98	8.34	1.13	595	105	8.77	1.22	635	113
	5'	9.92	.92	706	85	10.47	.95	744	88	10.59	1.00	756	93	10.74	1.05	766	98	10.93	1.13	783	105	11.44	1.22	808	113
	6'	12.76	.92	874	85	13.35	.95	915	88	13.51	1.00	931	93	13.69	1.05	949	98	14.06	1.13	964	105	14.79	1.22	1014	113
	7'	15.79	.92	1121	85	16.62	.95	1181	88	16.81	1.00	1213	93	16.86	1.05	1217	98	17.52	1.13	1257	105	18.49	1.22	1318	113
8'	3'	5.72	1.21	460	112	6.06	1.25	482	116	6.17	1.31	492	121	6.18	1.38	495	128	6.46	1.48	506	137	6.87	1.60	541	149
	4'	7.79	1.21	560	112	8.18	1.25	590	116	8.41	1.31	616	121	8.43	1.38	616	128	8.73	1.48	632	137	9.20	1.60	674	149
	5'	10.24	1.21	739	112	10.81	1.25	778	116	10.95	1.31	784	121	11.12	1.38	802	128	11.33	1.48	814	137	11.87	1.60	847	149
	6'	13.09	1.21	954	112	13.69	1.25	998	116	13.86	1.31	1008	121	14.07	1.38	1034	128	14.47	1.48	1051	137	15.22	1.60	1104	149
	7'	16.12	1.21	1155	112	16.97	1.25	1206	116	17.18	1.31	1236	121	17.24	1.38	1253	128	17.93	1.48	1295	137	18.93	1.60	1358	149
	8'	24.55	1.21	1404	112	25.70	1.25	1498	116	25.97	1.31	1539	121	26.47	1.38	1551	128	27.09	1.48	1618	137	28.50	1.60	1699	149
10'	3'	6.05	1.49	501	139	6.41	1.55	527	144	6.53	1.62	543	150	6.56	1.71	569	188	6.86	1.83	591	201	7.30	1.99	627	217
	4'	8.12	1.49	604	139	8.53	1.55	638	144	8.78	1.62	666	150	8.82	1.71	694	188	9.14	1.83	721	201	9.64	1.99	765	217
	5'	10.58	1.49	786	139	11.17	1.55	830	144	11.32	1.62	842	150	11.51	1.71	884	188	11.74	1.83	907	201	12.32	1.99	939	217
	6'	13.44	1.49	1005	139	14.06	1.55	1054	144	14.24	1.62	1069	150	14.46	1.71	1120	188	14.88	1.83	1148	201	15.67	1.99	1202	217
	7'	16.47	1.49	1209	139	17.33	1.55	1265	144	17.56	1.62	1301	150	17.64	1.71	1343	188	18.35	1.83	1395	201	19.38	1.99	1459	217
	8'	24.93	1.49	1462	139	26.09	1.55	1561	144	26.38	1.62	1607	150	26.89	1.71	1644	188	27.54	1.83	1717	201	28.98	1.99	1804	217
	9'	29.75	1.49	1849	139	31.21	1.55	1905	144	31.57	1.62	1965	150	32.18	1.71	2007	188	33.02	1.83	2074	201	34.98	1.99	2212	217
	10'	34.99	1.49	2151	139	36.88	1.55	2292	144	37.43	1.62	2366	150	37.94	1.71	2442	188	39.43	1.83	2553	201	41.33	1.99	2670	217
12'	8'	25.35	1.79	1502	196	26.54	1.86	1599	204	26.84	1.95	1645	213	27.37	2.06	1656	265	28.04	2.20	1712	334	29.53	2.38	1816	361
	9'	30.18	1.79	1889	196	31.66	1.86	1944	204	32.04	1.95	2003	213	32.67	2.06	2019	265	33.53	2.20	2082	334	35.53	2.38	2210	361
	10'	35.43	1.79	2192	196	37.34	1.86	2331	204	37.91	1.95	2389	213	38.44	2.06	2456	265	39.95	2.20	2562	334	41.89	2.38	2682	361
	11'	42.14	1.79	2894	196	44.33	1.86	3038	204	44.50	1.95	3096	213	45.38	2.06	3194	265	47.09	2.20	3336	334	49.43	2.38	3542	361
	12'	49.68	1.79	3777	196	51.55	1.86	3917	204	52.28	1.95	3987	213	53.38	2.06	4072	265	55.28	2.20	4181	334	58.56	2.38	4472	361

OUTLET WINGS

Span	Hgt.	0° Skew				5° Skew				10° Skew				15° Skew			
		Conc. C.Y.		Steel lbs.		Conc. C.Y.		Steel lbs.		Conc. C.Y.		Steel lbs.		Conc. C.Y.		Steel lbs.	
		1 Bbl.	Δc	1 Bbl.	Δs	1 Bbl.	Δc	1 Bbl.	Δs	1 Bbl.	Δc	1 Bbl.	Δs	1 Bbl.	Δc	1 Bbl.	Δs
6'	3'	8.58	1.55	639	135	8.74	1.56	657	135	8.75	1.58	658	137	8.96	1.61	667	140
	4'	11.40	1.55	837	135	11.58	1.56	843	135	11.60	1.58	845	137	11.65	1.61	853	140
	5'	14.49	1.55	1043	135	14.71	1.56	1062	135	14.74	1.58	1060	137	14.78	1.61	1062	140
	6'	17.97	1.55	1241	135	17.99	1.56	1235	135	18.26	1.58	1278	137	18.51	1.61	1281	140
	7'	21.70	1.55	1493	135	21.82	1.56	1512	135	22.09	1.58	1584	137	22.38	1.61	1611	140
8'	3'	9.12	2.02	706	177	9.29	2.03	725	178	9.31	2.05	726	180	9.53	2.09	751	184
	4'	11.96	2.02	877	177	12.14	2.03	883	178	12.17	2.05	885	180	12.23	2.09	908	184
	5'	15.06	2.02	1083	177	15.28	2.03	1102	178	15.31	2.05	1100	180	15.36	2.09	1117	184
	6'	18.55	2.02	1316	177	18.57	2.03	1310	178	18.84	2.05	1360	180	19.11	2.09	1385	184
	7'	22.28	2.02	1534	177	22.41	2.03	1553	178	22.68	2.05	1625	180	22.99	2.09	1670	184
	8'	30.92	2.02	1924	177	31.11	2.03	1901	178	31.48	2.05	1930	180	31.62	2.09	1958	184
10'	3'	9.69	2.51	775	220	9.86	2.52	794	221	9.89	2.55	794	223	10.12	2.59	805	228
	4'	12.54	2.51	949	220	12.72	2.52	956	221	12.76	2.55	958	223	12.83	2.59	967	228
	5'	15.65	2.51	1160	220	15.87	2.52	1179	221	15.91	2.55	1177	223	15.97	2.59	1181	228
	6'	19.14	2.51	1396	220	19.17	2.52	1389	221	19.44	2.55	1434	223	19.72	2.59	1452	228
	7'	22.88	2.51	1617	220	23.01	2.52	1636	221	23.29	2.55	1710	223	23.61	2.59	1738	228
	8'	31.56	2.51	2011	220	31.75	2.52	1988	221	32.13	2.55	2018	223	32.27	2.59	2032	228
	9'	37.18	2.51	2325	220	37.38	2.52	2357	221	37.48	2.55	2342	223	38.21	2.59	2395	228
	10'	43.26	2.51	2781	220	43.54	2.52	2767	221	43.61	2.55	2801	223	44.42	2.59	2844	228
12'	8'	32.22	2.98	2038	264	32.41	2.99	2025	265	32.79	3.02	2056	268	32.95	3.08	2073	274
	9'	37.85	2.98	2373	264	38.05	2.99	2405	265	38.15	3.02	2390	268	38.90	3.08	2446	274
	10'	43.94	2.98	2829	264	44.21	2.99	2815	265	44.29	3.02	2850	268	45.12	3.08	2896	274
	11'	50.88	2.98	3330	264	51.13	2.99	3362	265	51.25	3.02	3360	268	52.34	3.08	3422	274
	12'	58.80	2.98	4507	264	58.86	2.99	4482	265	59.56	3.02	4558	268	60.40	3.08	4593	274

Span	Hgt.	20° Skew				25° Skew				30° Skew				35° Skew				40° Skew				45° Skew			
		Conc. C.Y.		Steel lbs.		Conc. C.Y.		Steel lbs.		Conc. C.Y.		Steel lbs.		Conc. C.Y.		Steel lbs.		Conc. C.Y.		Steel lbs.		Conc. C.Y.		Steel lbs.	
		1 Bbl.	Δc	1 Bbl.	Δs	1 Bbl.	Δc	1 Bbl.	Δs	1 Bbl.	Δc	1 Bbl.	Δs	1 Bbl.	Δc	1 Bbl.	Δs	1 Bbl.	Δc	1 Bbl.	Δs	1 Bbl.	Δc	1 Bbl.	Δs
6'	3'	9.17	1.65	685	143	9.16	1.71	679	149	9.29	1.79	703	156	9.25	1.90	695	165	9.62	2.03	711	177	10.19	2.20	763	191
	4'	11.97	1.65	867	143	11.89	1.71	862	149	12.21	1.79	905	156	12.19	1.90	892	165	12.58	2.03	714	177	13.21	2.20	874	191
	5'	15.34	1.65	1098	143	15.28	1.71	1099	149	15.43	1.79	1120	156	15.62	1.90	1131	165	15.86	2.03	1150	177	16.57	2.20	1195	191
	6'	18.92	1.65	1314	143	18.85	1.71	1317	149	19.04	1.79	1342	156	19.26	1.90	1362	165	19.75	2.03	1584	177	20.67	2.20	1453	191
	7'	23.06	1.65	1656	143	22.81	1.71	1631	149	23.03	1.79	1672	156	23.05	1.90	1673	165	23.90	2.03	1725	177	25.06	2.20	1805	191
8'	3'	9.76	2.15	770	189	9.76	2.23	764	196	9.91	2.34	776	204	9.91	2.47	783	216	10.32	2.64	801	231	10.95	2.86	857	251
	4'	12.56	2.15	919	189	12.50	2.23	915	196	12.85	2.34	947	204	12.85	2.47	952	216	13.29	2.64	975	231	13.98	2.86	1038	251
	5'	15.94	2.15	1154	189	15.90	2.23	1155	196	16.08	2.34	1164	204	16.30	2.47	1190	216	16.58	2.64	1205	231	17.34	2.86	1259	251
	6'	19.53	2.15	1419	189	19.48	2.23	1423	196	19.69	2.34	1435	204	19.94	2.47	1470	216	20.48	2.64	1496	231	21.45	2.86	1569	251
	7'	23.68	2.15	1712	189	23.44	2.23	1679	196	23.69	2.34	1711	204	23.74	2.47	1733	216	24.64	2.64	1787	231	25.85	2.86	1870	251
	8'	32.45	2.15	1996	189	32.50	2.23	2019	196	32.81	2.34	2062	204	33.35	2.47	2084	216	34.09	2.64	2158	231	35.76	2.86	2264	251
10'	3'	10.37	2.67	825	235	10.40	2.77	824	243	10.57	2.89	849	254	10.60	3.06	874	298	11.05	3.27	911	318	11.74	3.54	961	344
	4'	13.73	2.67	980	235	13.14	2.77	978	243	13.51	2.89	1021	254	13.55	3.06	1047	298	14.03	3.27	1089	318	14.77	3.54	1147	344
	5'	16.57	2.67	1218	235	16.54	2.77	1223	243	16.75	2.89	1244	254	17.00	3.06	1289	298	17.32	3.27	1323	318	18.15	3.54	1369	344
	6'	20.16	2.67	1488	235	20.13	2.77	1495	243	20.36	2.89	1520	254	20.65	3.06	1573	298	21.23	3.27	1617	318	22.27	3.54	1684	344
	7'	24.32	2.67	1784	235	24.10	2.77	1754	243	24.38	2.89	1799	254	24.46	3.06	1839	298	25.40	3.27	1912	318	26.67	3.54	1989	344
	8'	33.13	2.67	2072	235	33.19	2.77	2097	243	33.53	2.89	2154	254	34.10	3.06	2193	298	34.89	3.27	2281	318	36.62	3.54	2387	344
	9'	39.20	2.67	2454	235	38.96	2.77	2490	243	39.37	2.89	2559	254	40.04	3.06	2604	298	41.01	3.27	2687	318	43.32	3.54	2848	344
	10'	45.49	2.67	2910	235	45.27	2.77	2924	243	45.87	2.89	3008	254	46.44	3.06	3087	298	48.13	3.27	3218	318	50.32	3.54	3354	344
12'	8'	33.82	3.17	2126	311	33.90	3.29	2159	323	34.26	3.44	2207	337	34.87	3.64	2230	397	35.70	3.89	2294	475	37.49	4.21	2424	513
	9'	39.90	3.17	2505	311	39.68	3.29	2552	323	40.11	3.44	2614	337	40.81	3.64	2641	397	41.83	3.89	2712	475	44.21	4.21	2871	513
	10'	46.20	3.17	2975	311	46.00	3.29	2987	323	46.62	3.44	3048	337	47.22	3.64	3125	397	48.96	3.89	3245	475	51.21	4.21	3392	513
	11'	53.70	3.17	3536	311	53.70	3.29	3747	323	53.85	3.44	3803	337	54.81	3.64	3911	397	56.73	3.89	4067	475	59.38	4.21	4300	513
	12'	61.49	3.17	4699	311	61.50	3.29	4669	323	62.28	3.44	4742	337	63.44	3.64	4837	397	65.55	3.89	4960	475	69.28	4.21	5287	513

NOTES :

All quantities are for headwalls of barrels shown in Table No. 1 (0-10' Fill).
Quantities are shown for single barrel culvert only.
Multi-barrel culvert headwall quantities are obtained by adding, for each additional barrel, Δs and Δc to the inlet and outlet quantities.

NOTATIONS :

Δc = inlet or outlet concrete quantity per additional barrel.

Δs = inlet or outlet steel quantity per additional barrel.

DESIGN APPROVED

APPROVED FOR DISTRIBUTION

ARIZONA
DEPARTMENT OF TRANSPORTATION
HIGHWAYS DIVISION
STANDARD DRAWINGS

HEADWALL QUANTITIES
4:1 SLOPE

REVISION 7-88

STANDARD NO. B-05.20

CADD FILENAME= ZFA *SL4*B0520
VIEW NAME= B0520

INLET WINGS

Span	Hgt.	0° Skew Conc. C.Y. 1 Bbl.	Δc	Steel lbs. 1 Bbl.	Δs	5° Skew Conc. C.Y. 1 Bbl.	Δc	Steel lbs. 1 Bbl.	Δs	10° Skew Conc. C.Y. 1 Bbl.	Δc	Steel lbs. 1 Bbl.	Δs	15° Skew Conc. C.Y. 1 Bbl.	Δc	Steel lbs. 1 Bbl.	Δs	20° Skew Conc. C.Y. 1 Bbl.	Δc	Steel lbs. 1 Bbl.	Δs
6'	3'	5.07	.86	352	80	5.35	.87	383	80	5.55	.88	397	81	5.84	.89	422	83	6.38	.92	466	85
	4'	7.25	.86	507	80	7.32	.87	518	80	7.68	.88	550	81	8.30	.89	591	83	8.91	.92	642	85
	5'	9.56	.86	657	80	9.91	.87	696	80	10.25	.88	720	81	10.94	.89	777	83	11.78	.92	834	85
	6'	12.32	.86	837	80	12.73	.87	870	80	13.46	.88	934	81	14.27	.89	973	83	15.28	.92	1039	85
	7'	15.47	.86	1131	80	16.08	.87	1198	80	16.86	.88	1252	81	17.80	.89	1233	83	19.28	.92	1344	85
8'	3'	5.37	1.13	403	105	5.65	1.14	439	106	5.86	1.15	455	107	6.16	1.17	483	109	6.70	1.21	531	112
	4'	7.56	1.13	532	105	7.63	1.14	543	106	7.99	1.15	575	107	8.62	1.17	624	109	9.24	1.21	676	112
	5'	9.87	1.13	682	105	10.22	1.14	722	106	10.57	1.15	746	107	11.26	1.17	810	109	12.12	1.21	864	112
	6'	12.63	1.13	904	105	13.04	1.14	939	106	13.78	1.15	1006	107	14.59	1.17	1057	109	15.62	1.21	1123	112
	7'	15.78	1.13	1157	105	16.40	1.14	1224	106	17.18	1.15	1278	107	18.13	1.17	1261	109	19.62	1.21	1378	112
	8'	24.25	1.13	1378	105	25.03	1.14	1407	106	26.12	1.15	1482	107	27.42	1.17	1562	109	29.61	1.21	1703	112
10'	3'	5.68	1.40	460	130	5.97	1.41	485	131	6.18	1.43	501	132	6.49	1.45	524	135	7.04	1.49	574	139
	4'	7.87	1.40	580	130	7.94	1.41	592	131	8.31	1.43	625	132	8.95	1.45	669	135	9.58	1.49	724	139
	5'	10.18	1.40	733	130	10.54	1.41	774	131	10.89	1.43	799	132	11.60	1.45	860	135	12.47	1.49	916	139
	6'	12.95	1.40	958	130	13.36	1.41	994	131	14.11	1.43	1060	132	14.94	1.45	1110	135	15.98	1.49	1179	139
	7'	16.11	1.40	1214	130	16.72	1.41	1283	131	17.52	1.43	1338	132	18.47	1.45	1317	135	19.99	1.49	1438	139
	8'	24.59	1.40	1439	130	25.38	1.41	1465	131	26.48	1.43	1546	132	27.80	1.45	1622	135	30.01	1.49	1758	139
12'	8'	24.98	1.69	1462	156	25.78	1.69	1496	157	26.89	1.71	1577	159	28.22	1.74	1657	162	30.46	1.79	1799	196

Span	Hgt.	25° Skew Conc. C.Y. 1 Bbl.	Δc	Steel lbs. 1 Bbl.	Δs	30° Skew Conc. C.Y. 1 Bbl.	Δc	Steel lbs. 1 Bbl.	Δs	35° Skew Conc. C.Y. 1 Bbl.	Δc	Steel lbs. 1 Bbl.	Δs	40° Skew Conc. C.Y. 1 Bbl.	Δc	Steel lbs. 1 Bbl.	Δs	45° Skew Conc. C.Y. 1 Bbl.	Δc	Steel lbs. 1 Bbl.	Δs
6'	3'	6.72	.95	486	88	6.70	1.00	492	93	6.81	1.05	500	98	6.94	1.13	504	105	7.20	1.22	524	113
	4'	9.42	.95	678	88	9.53	1.00	690	93	9.53	1.05	681	98	9.68	1.13	692	105	9.99	1.22	712	113
	5'	12.49	.95	882	88	12.47	1.00	887	93	12.62	1.05	899	98	12.81	1.13	909	105	13.24	1.22	932	113
	6'	16.17	.95	1100	88	16.01	1.00	1101	93	16.10	1.05	1114	98	16.56	1.13	1132	105	17.12	1.22	1178	113
	7'	20.24	.95	1419	88	20.25	1.00	1425	93	20.57	1.05	1447	98	20.90	1.13	1474	105	21.52	1.22	1526	113
8'	3'	7.06	1.25	554	116	7.05	1.31	553	121	7.18	1.38	570	128	7.34	1.48	575	137	7.63	1.60	597	149
	4'	9.76	1.25	712	116	9.89	1.31	718	121	9.90	1.38	717	128	10.08	1.48	730	137	10.42	1.60	751	149
	5'	12.84	1.25	913	116	12.83	1.31	916	121	13.00	1.38	936	128	13.21	1.48	947	137	13.67	1.60	972	149
	6'	16.52	1.25	1194	116	16.38	1.31	1187	121	16.48	1.38	1199	128	16.97	1.48	1227	137	17.56	1.60	1276	149
	7'	20.60	1.25	1454	116	20.62	1.31	1453	121	20.96	1.38	1483	128	21.31	1.48	1505	137	21.97	1.60	1564	149
	8'	31.29	1.25	1836	116	31.12	1.31	1817	121	31.46	1.38	1829	128	32.05	1.48	1875	137	33.26	1.60	1947	149
10'	3'	7.41	1.55	602	144	7.42	1.62	606	150	7.56	1.71	647	188	7.74	1.83	663	201	8.07	1.99	686	217
	4'	10.12	1.55	765	144	10.26	1.62	776	150	10.30	1.71	799	188	10.50	1.83	823	201	10.87	1.99	844	217
	5'	13.21	1.55	965	144	13.21	1.62	977	150	13.40	1.71	1023	188	13.63	1.83	1045	201	14.13	1.99	1070	217
	6'	16.89	1.55	1255	144	16.77	1.62	1252	150	16.88	1.71	1289	188	17.39	1.83	1329	201	18.02	1.99	1379	217
	7'	20.98	1.55	1519	144	21.02	1.62	1524	150	21.37	1.71	1578	188	21.75	1.83	1611	201	22.43	1.99	1670	217
	8'	31.70	1.55	1897	144	31.55	1.62	1892	150	31.90	1.71	1929	188	32.51	1.83	1985	201	33.77	1.99	2058	217
12'	8'	32.18	1.86	1937	204	32.04	1.95	1930	213	32.41	2.06	1941	265	33.04	2.20	1992	334	34.33	2.38	2069	361

OUTLET WINGS

Span	Hgt.	0° Skew Conc. C.Y. 1 Bbl.	Δc	Steel lbs. 1 Bbl.	Δs	5° Skew Conc. C.Y. 1 Bbl.	Δc	Steel lbs. 1 Bbl.	Δs	10° Skew Conc. C.Y. 1 Bbl.	Δc	Steel lbs. 1 Bbl.	Δs	15° Skew Conc. C.Y. 1 Bbl.	Δc	Steel lbs. 1 Bbl.	Δs	20° Skew Conc. C.Y. 1 Bbl.	Δc	Steel lbs. 1 Bbl.	Δs
6'	3'	10.48	1.55	779	135	10.50	1.56	780	135	10.51	1.58	773	137	10.73	1.61	794	140	10.77	1.65	797	143
	4'	13.99	1.55	1019	135	14.18	1.56	1026	135	14.00	1.58	1011	137	14.24	1.61	1035	140	14.50	1.65	1046	143
	5'	17.82	1.55	1278	135	18.02	1.56	1286	135	18.06	1.58	1293	137	18.32	1.61	1304	140	18.60	1.65	1332	143
	6'	22.10	1.55	1516	135	22.34	1.56	1525	135	22.38	1.58	1559	137	22.66	1.61	1570	140	22.98	1.65	1597	143
	7'	26.74	1.55	1838	135	26.94	1.56	1844	135	27.01	1.58	1925	137	27.66	1.61	1962	140	28.01	1.65	1983	143
8'	3'	11.05	2.02	853	177	11.06	2.03	854	178	11.08	2.05	848	180	11.31	2.09	884	184	11.37	2.15	888	189
	4'	14.56	2.02	1059	177	14.75	2.03	1067	178	14.59	2.05	1052	180	14.84	2.09	1091	184	15.11	2.15	1102	189
	5'	18.41	2.02	1319	177	18.62	2.03	1326	178	18.65	2.05	1334	180	18.93	2.09	1359	184	19.22	2.15	1383	189
	6'	22.70	2.02	1615	177	22.94	2.03	1625	178	22.98	2.05	1659	180	23.28	2.09	1685	184	23.62	2.15	1714	189
	7'	27.35	2.02	1879	177	27.56	2.03	1885	178	27.63	2.05	1967	180	28.30	2.09	2910	184	28.66	2.15	2040	189
	8'	38.78	2.02	2354	177	38.54	2.03	2349	178	38.93	2.05	2368	180	39.47	2.09	2414	184	40.26	2.15	2473	189
10'	3'	11.63	2.51	926	220	11.65	2.52	927	221	11.67	2.55	921	223	11.91	2.59	944	228	11.99	2.67	948	235
	4'	15.16	2.51	1136	220	15.35	2.52	1141	221	15.19	2.55	1126	223	15.45	2.59	1152	228	15.74	2.67	1164	235
	5'	19.01	2.51	1400	220	19.22	2.52	1408	221	19.27	2.55	1416	223	19.55	2.59	1428	228	19.86	2.67	1453	235
	6'	23.31	2.51	1701	220	23.56	2.52	1711	221	23.61	2.55	1746	223	23.91	2.59	1758	228	24.27	2.67	1788	235
	7'	27.97	2.51	1970	200	28.19	2.52	1967	221	28.26	2.55	2049	223	28.94	2.59	2088	228	29.32	2.67	2110	235
	8'	39.46	2.51	2449	220	39.22	2.52	2444	221	39.61	2.55	2464	223	40.16	2.59	2496	228	40.97	2.67	2557	235
	9'	46.44	2.51	2858	220	46.54	2.52	2889	221	46.61	2.55	2873	223	47.59	2.59	2927	228	48.46	2.67	2973	235
	10'	54.10	2.51	3354	220	54.10	2.52	3385	221	54.23	2.55	3368	223	55.30	2.59	3412	228	56.38	2.67	3465	235
12'	8'	40.15	2.98	2497	264	39.92	2.99	2492	265	40.32	3.02	2512	268	40.88	3.08	2547	274	41.70	3.17	2609	311

Span	Hgt.	25° Skew Conc. C.Y. 1 Bbl.	Δc	Steel lbs. 1 Bbl.	Δs	30° Skew Conc. C.Y. 1 Bbl.	Δc	Steel lbs. 1 Bbl.	Δs	35° Skew Conc. C.Y. 1 Bbl.	Δc	Steel lbs. 1 Bbl.	Δs	40° Skew Conc. C.Y. 1 Bbl.	Δc	Steel lbs. 1 Bbl.	Δs	45° Skew Conc. C.Y. 1 Bbl.	Δc	Steel lbs. 1 Bbl.	Δs
6'	3'	10.70	1.71	783	149	10.65	1.79	793	156	10.79	1.90	803	165	10.97	2.03	809	177	11.36	2.20	844	191
	4'	14.23	1.71	1033	149	14.37	1.79	1053	156	14.34	1.90	1041	165	14.54	2.03	1055	177	14.98	2.20	1089	191
	5'	18.13	1.71	1294	149	18.07	1.79	1303	156	18.26	1.90	1317	165	18.49	2.03	1329	177	19.05	2.20	1367	191
	6'	22.70	1.71	1575	149	22.44	1.79	1574	156	22.49	1.90	1584	165	23.07	2.03	1609	177	23.76	2.20	1670	191
	7'	27.60	1.71	1951	149	27.50	1.79	1956	156	27.86	1.90	1979	165	28.24	2.03	2009	177	28.99	2.20	2076	191
8'	3'	11.31	2.23	874	196	11.28	2.34	870	204	11.46	2.47	896	216	11.69	2.64	904	231	12.13	2.86	942	251
	4'	14.86	2.23	1090	196	15.02	2.34	1097	204	15.02	2.47	1101	216	15.27	2.64	1116	231	15.76	2.86	1153	251
	5'	18.76	2.23	1348	196	18.73	2.34	1347	204	18.95	2.47	1377	216	19.23	2.64	1391	231	19.84	2.86	1432	251
	6'	23.35	2.23	1691	196	23.11	2.34	1636	204	23.20	2.47	1693	216	23.82	2.64	1729	231	24.56	2.86	1794	251
	7'	28.26	2.23	2009	196	28.19	2.34	2000	204	28.57	2.47	2040	216	28.99	2.64	2064	231	29.80	2.86	2139	251
	8'	39.37	2.23	2448	196	39.10	2.34	2422	204	39.41	2.47	2438	216	40.06	2.64	2486	231	41.47	2.86	2579	251
10'	3'	11.95	2.77	937	243	11.95	2.89	946	254	12.16	3.06	990	298	12.43	3.27	1017	318	12.93	3.54	1049	344
	4'	15.50	2.77	1158	243	15.69	2.89	1178	254	15.73	3.06	1199	298	16.02	3.27	1234	318	16.57	3.54	1264	344
	5'	19.42	2.77	1415	243	19.41	2.89	1433	254	19.66	3.06	1480	298	19.99	3.27	1513	318	20.66	3.54	1547	344
	6'	24.01	2.77	1767	243	23.80	2.89	1765	254	23.92	3.06	1799	298	24.58	3.27	1855	318	25.39	3.54	1914	344
	7'	28.94	2.77	2090	243	28.89	2.89	2094	254	29.31	3.06	2151	298	29.77	3.27	2194	318	30.64	3.54	2263	344
	8'	40.09	2.77	2525	243	39.85	2.89	2520	254	40.19	3.06	2554	298	40.88	3.27	2621	318	42.35	3.54	2708	344
	9'	47.22	2.77	2966	243	47.58	2.89	3014	254	47.96	3.06	3057	298	48.42	3.27	3094	318	50.56	3.54	3206	344
	10'	55.59	2.77	3438	243	55.30	2.89	3403	254	55.77	3.06	3459	298	57.02	3.27	3554	318	59.01	3.54	3649	344
12'	8'	40.83	3.29	2588	323	40.61	3.44	2575	337	40.99	3.64	2591	397	41.72	3.89	2646	475	43.25	4.21	2746	513

NOTES :

All quantities are for headwalls of barrels shown in Table No. I (0-10' Fill).
Quantities are shown for single barrel culvert only.
Multi-barrel culvert headwall quantities are obtained by adding, for each additional barrel, Δs and Δc to the inlet and outlet quantities.

NOTATIONS :

Δc = inlet or outlet concrete quantity per additional barrel.

Δs = inlet or outlet steel quantity per additional barrel.

DESIGN APPROVED	ARIZONA DEPARTMENT OF TRANSPORTATION HIGHWAYS DIVISION STANDARD DRAWINGS	REVISION
T.D. Davis		7-88
APPROVED FOR DISTRIBUTION T.A. Bryant, II	HEADWALL QUANTITIES 6:1 SLOPE	STANDARD NO. B-05.30

2910 F. DANIEL DAVIS

CADD FILENAME: ZFA
VIEW NAME:

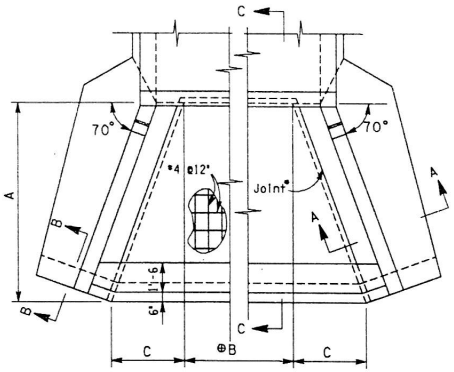

PLAN

Apron for 0° skew box culvert

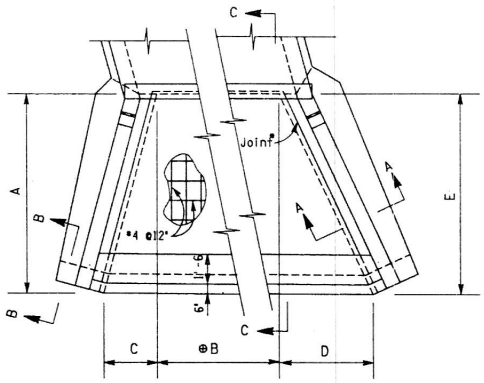

PLAN

Apron for 0° to 15° skew box culvert

• Optional construction joint. Apron may be poured with wingwall footings and bottom slab of barrel.

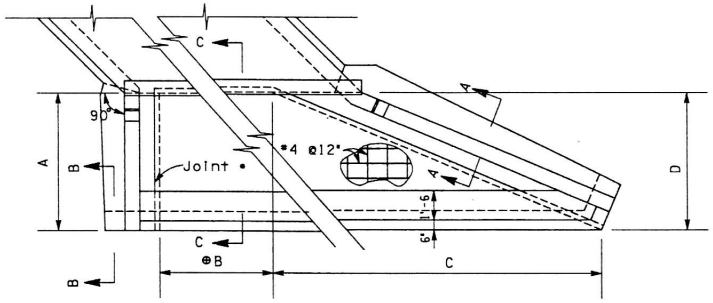

PLAN

Apron for 20° to 45° skew box culvert

Span	△									
	0° Skew	5° Skew	10° Skew	15° Skew	20° Skew	25° Skew	30° Skew	35° Skew	40° Skew	45° Skew
6'	6'-8	6'-8 1/4	6'-9 1/4	6'-10 7/8	7'-1 1/8	7'-4 1/4	7'-8 3/8	8'-1 5/8	8'-8 3/8	9'-5 1/8
8'	8'-9	8'-9 3/8	8'-10 5/8	9'-0 3/4	9'-3 3/4	9'-7 7/8	10'-1 1/4	10'-8 1/8	11'-5 1/8	12'-4 1/2
10'	10' 11	10'-11 1/2	11'-1	11'-3 5/8	11'-7 3/8	12'-0 1/2	12'-7 1/4	13'-3 7/8	14'-3	15'-5 1/4
12'	13'-1	13'-1 5/8	13'-3 3/8	13'-6 1/2	13'-11 1/8	14'-5 1/4	15'-1 1/4	15'-11 5/8	17'-1	18'-6

⊕ Dimension varies with number of barrels. △ equals length to be added to dimension 'B' for each additional barrel.

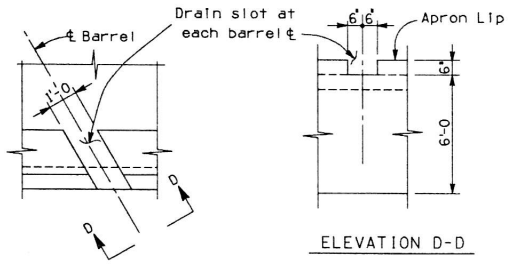

ELEVATION D-D

APRON DRAIN DETAIL

NOTES:

For General Notes and miscellaneous details see B-01.10.

See B-06.20, B-06.30 and B-06.40 for apron dimensions and quantities.

The apron quantities take into consideration the cutoff walls being omitted along outlet headwall and shall be used on new box culverts only.

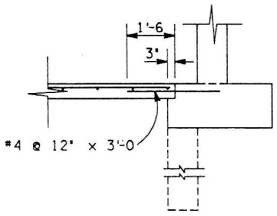

SECTION A-A

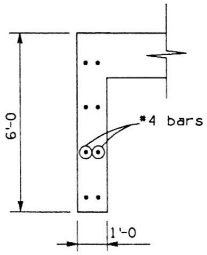

SECTION B-B

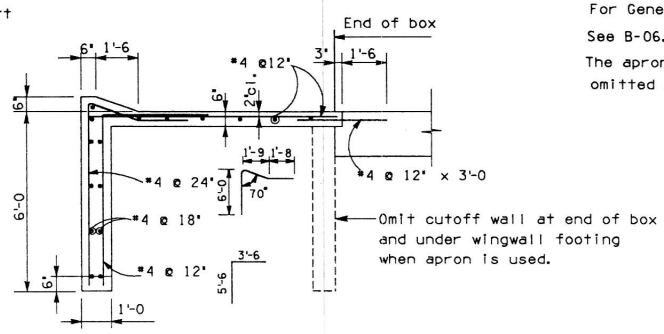

SECTION C-C

	DESIGN APPROVED	ARIZONA DEPARTMENT OF TRANSPORTATION HIGHWAYS DIVISION STANDARD DRAWINGS	REVISION 7-88
	APPROVED FOR DISTRIBUTION	OUTLET APRON DETAILS	STANDARD NO. B-06.10

CADD FILENAME= 2FA
VIEW NAME=

DIMENSIONS

Span	Hgt.	0° Skew A	0° Skew B	0° Skew C	5° Skew A	5° Skew B	5° Skew C	5° Skew D	5° Skew E	10° Skew A	10° Skew B	10° Skew C	10° Skew D	10° Skew E
6'	3'	6'-7½	4'-8¼	2'-4⅞	6'-8	4'-8½	1'-9⅜	3'-0½	6'-6¼	6'-8	4'-9⅛	1'-2⅛	3'-11¼	6'-9¾
	4'	8'-0⅜	4'-8¼	2'-11⅛	8'-1⅜	4'-8½	2'-2⅛	3'-8⅛	7'-10⅝	8'-1⅝	4'-9⅛	1'-5¼	4'-8¼	8'-1⅜
	5'	9'-5¼	4'-8¼	3'-5¼	9'-6¾	4'-8½	2'-6¾	4'-6¼	9'-8⅜	9'-7⅜	4'-9⅛	1'-8⅜	5'-5¼	9'-4⅞
	6'	10'-10¼	4'-8¼	3'-11⅜	11'-0⅛	4'-8½	2'-11⅜	5'-1⅞	11'-0⅝	11'-1⅛	4'-9⅛	1'-11½	6'-5¼	11'-1¾
	7'	12'-3⅛	4'-8¼	4'-5½	12'-5½	4'-8½	3'-4⅛	5'-9½	12'-5	12'-6⅞	4'-9⅛	2'-2⅝	7'-2¼	12'-5¼
8'	3'	6'-7½	6'-10¼	2'-4⅞	6'-8	6'-10½	1'-9⅜	3'-0½	6'-6¼	6'-8	6'-11½	1'-2⅛	3'-11¼	6'-9¾
	4'	8'-0⅜	6'-10¼	2'-11⅛	8'-1⅜	6'-10½	2'-2⅛	3'-8⅛	7'-10⅝	8'-1⅝	6'-11½	1'-5¼	4'-8¼	8'-1⅜
	5'	9'-5¼	6'-10¼	3'-5¼	9'-6¾	6'-10½	2'-6¾	4'-6¼	9'-8⅜	9'-7⅜	6'-11½	1'-8⅜	5'-5¼	9'-4⅞
	6'	10'-10¼	6'-10¼	3'-11⅜	11'-0⅛	6'-10½	2'-11⅜	5'-1⅞	11'-0⅝	11'-1⅛	6'-11½	1'-11½	6'-5¼	11'-1¾
	7'	12'-3⅛	6'-10¼	4'-5½	12'-5½	6'-10½	3'-4⅛	5'-9½	12'-5	12'-6⅞	6'-11½	2'-2⅝	7'-2¼	12'-5¼
	8'	14'-3¾	5'-9½	5'-2½	14'-0½	5'-9¾	3'-9⅛	6'-6¼	13'-11⅞	14'-1⅝	5'-10½	2'-5⅞	8'-0⅞	13'-11⅞
10'	3'	6'-7½	9'-0¼	2'-4⅞	6'-8	9'-0⅝	1'-9⅜	3'-0½	6'-6¼	6'-8	9'-1⅞	1'-2⅛	3'-11¼	6'-9¾
	4'	8'-0⅜	9'-0¼	2'-11⅛	8'-1⅜	9'-0⅝	2'-2⅛	3'-8⅛	7'-10⅝	8'-1⅝	9'-1⅞	1'-5¼	4'-8¼	8'-1⅜
	5'	9'-5¼	9'-0¼	3'-5¼	9'-6¾	9'-0⅝	2'-6¾	4'-6¼	9'-8⅜	9'-7⅜	9'-1⅞	1'-8⅜	5'-5¼	9'-4⅞
	6'	10'-10¼	9'-0¼	3'-11⅜	11'-0⅛	9'-0⅝	2'-11⅜	5'-1⅞	11'-0⅝	11'-1⅛	9'-1⅞	1'-11½	6'-5¼	11'-1¾
	7'	12'-3⅛	9'-0¼	4'-5½	12'-5½	9'-0⅝	3'-4⅛	5'-9½	12'-5	12'-6⅞	9'-1⅞	2'-2⅝	7'-2¼	12'-5¼
	8'	14'-3¾	7'-11½	5'-2½	14'-0½	7'-11¾	3'-9⅛	6'-6¼	13'-11⅞	14'-1⅝	8'-0⅞	2'-5⅞	8'-0⅞	13'-11⅞
	9'	15'-9	7'-9⅜	5'-8¾	15'-6⅛	7'-9⅝	4'-1⅞	7'-4⅝	15'-10	15'-7½	7'-10¾	2'-9	9'-1¼	15'-9⅛
	10'	17'-2¼	7'-7¼	6'-3	16'-11¾	7'-7½	4'-6⅝	8'-0⅜	17'-2¾	17'-1⅜	7'-8½	3'-0¼	9'-10½	17'-1¼
12'	8'	14'-3¾	10'-3½	5'-2½	14'-0½	10'-3⅞	3'-9⅛	6'-6¼	13'-11⅞	14'-1⅝	10'-5¼	2'-5⅞	8'-0⅞	13'-11⅞
	9'	15'-9	10'-1	5'-8¾	5'-6⅛	10'-1¾	4'-1⅞	7'-4⅝	15'-10	15'-7½	10'-3⅛	2'-9	9'-1¼	15'-9⅛
	10'	17'-2¼	9'-11¼	6'-3	16'-11¾	9'-11⅝	4'-6⅝	8'-0⅜	17'-2¾	17'-1⅜	10'-1	3'-0¼	9'-10½	17'-1¼
	11'	18'-7½	9'-9⅛	6'-9⅜	18'-5⅜	9'-9½	4'-11⅜	8'-8¼	18'-7½	18'-7⅜	9'-10¾	3'-3⅜	10'-7¾	18'-5⅜
	12'	20'-0¾	9'-7	7'-3⅝	19'-11⅛	9'-7⅜	5'-4⅛	9'-4	20'-0¼	20'-1¼	9'-8⅝	3'-6½	11'-8⅛	20'-2⅝

Span	Hgt.	15° Skew A	15° Skew B	15° Skew C	15° Skew D	15° Skew E	20° Skew A	20° Skew B	20° Skew C	20° Skew D	25° Skew A	25° Skew B	25° Skew C	25° Skew D
6'	3'	6'-1¼	4'-10⅛	6 3/8"	4'-7⅜	6'-7⅛	6'-0	4'-11¾	5'-7½	6'-8½	6'-0	5'-2⅝	6'-8⅝	6'-8⅝
	4'	7'-7¼	4'-10⅛	8"	5'-9⅛	8'-2¾	7'-6	4'-11¾	6'-11	8'-2⅞	7'-6	5'-2⅝	8'-1⅝	8'-1⅝
	5'	9'-1⅛	4'-10⅛	9 1/2"	6'-7½	9'-5½	9'-0	4'-11¾	7'-10½	9'-4¾	8'-6	5'-2⅝	9'-2¼	9'-2¼
	6'	10'-7⅛	4'-10⅛	11 1/8"	7'-9¼	11'-1¼	10'-6	4'-11¾	9'-2	10'-11⅛	10'-0	5'-2⅝	10'-7¼	10'-7¼
	7'	12'-1	4'-10⅛	1'-0⅝	8'-7⅝	12'-3⅞	12'-0	4'-11¾	10'-1½	12'-0⅛	11'-6	5'-2⅝	12'-0¼	12'-0¼
8'	3'	6'-1¼	7'-1⅛	6 3/8"	4'-7⅜	6'-7⅛	6'-0	7'-3⅜	5'-7½	6'-8½	6'-0	7'-7⅜	6'-8⅝	6'-8⅝
	4'	7'-7¼	7'-1⅛	8"	5'-9⅛	8'-2¾	7'-6	7'-3⅜	6'-11	8'-2⅞	7'-6	7'-7⅜	8'-1⅝	8'-1⅝
	5'	9'-1⅛	7'-1⅛	9 1/2"	6'-7½	9'-5½	9'-0	7'-3⅜	7'-10½	9'-4¾	8'-6	7'-7⅜	9'-2¼	9'-2¼
	6'	10'-7⅛	7'-1⅛	11 1/8"	7'-9¼	11'-1¼	10'-6	7'-3⅜	9'-2	10'-11⅛	10'-0	7'-7⅜	10'-7¼	10'-7¼
	7'	12'-1	7'-1⅛	1'-0⅝	8'-7⅝	12'-3⅞	12'-0	7'-3⅜	10'-1½	12'-0⅛	11'-6	7'-7⅜	12'-0¼	12'-0¼
	8'	13'-7½	5'-11¾	1'-2¼	9'-8⅜	13'-10⅛	13'-6	6'-1½	11'-8¼	13'-11⅛	13'-0	6'-4⅞	13'-9½	13'-9½
10'	3'	6'-1¼	9'-4	6 3/8"	4'-7⅜	6'-7⅛	6'-0	9'-7	5'-7½	6'-8½	13'-0	10'-0	6'-8⅝	6'-8⅝
	4'	7'-7¼	9'-4	8"	5'-9⅛	8'-2¾	7'-6	9'-7	6'-11	8'-2⅞	7'-6	10'-0	8'-1⅝	8'-1⅝
	5'	9'-1⅛	9'-4	9 1/2"	6'-7½	9'-5½	9'-0	9'-7	7'-10½	9'-4¾	8'-6	10'-0	9'-2¼	9'-2¼
	6'	10'-7⅛	9'-4	11 1/8"	7'-9¼	11'-1¼	10'-6	9'-7	9'-2	10'-11⅛	10'-0	10'-0	10'-7¼	10'-7¼
	7'	12'-1	9'-4	1'-0⅝	8'-7⅝	12'-3⅞	12'-0	9'-7	10'-1½	12'-0⅛	11'-6	10'-0	12'-0¼	12'-0¼
	8'	13'-7½	8'-2⅝	1'-2¼	9'-8⅜	13'-10⅛	13'-6	8'-5¼	11'-8¼	13'-11⅛	13'-0	8'-9½	13'-9½	13'-9½
	9'	15'-1½	8'-0⅜	1'-3⅞	10'-10½	15'-6⅜	15'-0	8'-2⅞	13'-0⅛	15'-6⅛	14'-6	8'-7⅛	15'-3⅛	15'-3⅛
	10'	16'-7½	7'-10¼	1'-5½	11'-9¼	16'-9⅝	16'-5	8'-0⅝	14'-0¼	16'-8⅝	15'-6	8'-4¾	16'-4⅝	16'-4⅝
12'	8'	13'-7½	10'-7⅝	1'-2¼	9'-8⅜	13'-10⅛	13'-6	10'-11	11'-8¼	13'-11⅛	13'-0	11'-4⅜	13'-9½	13'-9½
	9'	15'-1½	10'-5⅜	1'-3⅞	10'-10½	15'-6⅜	15'-0	10'-8¾	13'-0⅛	15'-6⅛	14'-6	11'-2	15'-3⅛	15'-3⅛
	10'	16'-7½	10'-3⅛	1'-5½	11'-9¼	16'-9⅝	16'-5	10'-6⅜	14'-0¼	16'-8⅝	15'-6	10'-11⅝	16'-4⅝	16'-4⅝
	11'	18'-1½	10'-1	1'-7	12'-11⅜	18'-5⅞	18'-0	10'-4⅛	15'-4¼	18'-3⅝	17'-0	10'-9⅛	17'-10½	17'-10½
	12'	19'-7½	9'-10¾	1'-8⅝	13'-10⅛	19'-9¼	19'-6	10'-1¾	16'-4⅜	19'-6	18'-6	10'-6¾	19'-3⅞	19'-3⅞

Span	Hgt.	30° Skew A	30° Skew B	30° Skew C	30° Skew D	35° Skew A	35° Skew B	35° Skew C	35° Skew D	40° Skew A	40° Skew B	40° Skew C	40° Skew D	45° Skew A	45° Skew B	45° Skew C	45° Skew D
6'	3'	5'-6	5'-6⅜	7'-10⅝	6'-7⅜	5'-6	5'-10⅞	9'-1½	6'-4¾	5'-0	6'-4½	10'-10⅞	6'-3⅝	5'-0	6'-11⅛	12'-5⅛	5'-9⅝
	4'	7'-0	5'-6⅜	9'-5	7'-10¾	6'-6	5'-10⅞	10'-9⅛	7'-6½	6'-6	6'-4½	12'-7¾	7'-3⅝	6'-0	6'-11⅛	15'-1¾	7'-0¾
	5'	8'-0	5'-6⅜	10'-11⅜	9'-2¼	8'-0	5'-10⅞	12'-9¾	8'-11⅝	7'-6	6'-4½	14'-9⅝	8'-6⅝	7'-0	6'-11⅛	17'-5	8'-1½
	6'	9'-6	5'-6⅜	12'-5¾	10'-5⅝	9'-0	5'-10⅞	14'-5⅜	10'-1⅜	8'-6	6'-4½	16'-11⅝	9'-9⅝	8'-6	6'-11⅛	19'-8⅛	9'-2⅛
	7'	11'-0	5'-6⅜	14'-0⅛	11'-9	10'-6	5'-10⅞	16'-1⅛	11'-3¼	10'-0	6'-4½	19'-1⅝	11'-0⅝	9'-6	6'-11⅛	21'-11⅜	10'-2¾
8'	3'	5'-6	8'-0⅜	7'-10⅝	6'-7⅜	5'-6	8'-6⅝	9'-1½	6'-4¾	5'-0	9'-2⅜	10'-10⅞	6'-3⅝	5'-0	9'-11⅞	12'-5⅛	5'-9⅝
	4'	7'-0	8'-0⅜	9'-5	7'-10¾	6'-6	8'-6⅝	10'-9⅛	7'-6½	6'-6	9'-2⅜	12'-7¾	7'-3⅝	6'-0	9'-11⅞	15'-1¾	7'-0¾
	5'	8'-0	8'-0⅜	10'-11⅜	9'-2¼	8'-0	8'-6⅝	12'-9¾	8'-11⅝	7'-6	9'-2⅜	14'-9⅝	8'-6⅝	7'-0	9'-11⅞	17'-5	8'-1½
	6'	9'-6	8'-0⅜	12'-5¾	10'-5⅝	9'-0	8'-6⅝	14'-5⅜	10'-1⅜	8'-6	9'-2⅜	16'-11⅝	9'-9⅝	8'-6	9'-11⅞	19'-8⅛	9'-2⅛
	7'	11'-0	8'-0⅜	14'-0⅛	11'-9	10'-6	8'-6⅝	16'-1⅛	11'-3¼	10'-0	9'-2⅜	19'-1⅝	11'-0⅝	9'-6	9'-11⅞	21'-11⅜	10'-2¾
	8'	12'-0	6'-9	16'-0	13'-5⅛	11'-6	7'-2⅛	18'-8⅝	13'-1⅜	11'-0	7'-8⅜	21'-7½	12'-5¾	11'-0	8'-3¾	25'-7⅝	11'-11½
10'	3'	5'-6	10'-6⅜	7'-10⅝	6'-7⅜	5'-6	11'-2⅜	9'-1½	6'-4¾	5'-0	12'-0⅜	10'-10⅞	6'-3⅝	5'-0	13'-0¾	12'-5⅛	5'-9⅝
	4'	7'-0	10'-6⅜	9'-5	7'-10¾	6'-6	11'-2⅜	10'-9⅛	7'-6½	6'-6	12'-0⅜	12'-7¾	7'-3⅝	6'-0	13'-0¾	15'-1¾	7'-0¾
	5'	8'-0	10'-6⅜	10'-11⅜	9'-2¼	8'-0	11'-2⅜	12'-9¾	8'-11⅝	7'-6	12'-0⅜	14'-9⅝	8'-6⅝	7'-0	13'-0¾	17'-5	8'-1½
	6'	9'-6	10'-6⅜	12'-5¾	10'-5⅝	9'-0	11'-2⅜	14'-5⅜	10'-1⅜	8'-6	12'-0⅜	16'-11⅝	9'-9⅝	8'-6	13'-0¾	19'-8⅛	9'-2⅛
	7'	11'-0	10'-6⅜	14'-0⅛	11'-9	10'-6	11'-2⅜	16'-1⅛	11'-3¼	10'-0	12'-0⅜	19'-1⅝	11'-0⅝	9'-6	13'-0¾	21'-11⅜	10'-2¾
	8'	12'-0	9'-3	16'-0	13'-5⅛	11'-6	9'-9⅞	18'-8⅝	13'-1⅜	11'-0	10'-6⅜	21'-7½	12'-5¾	11'-0	11'-4½	25'-7⅝	11'-11½
	9'	13'-6	9'-0½	17'-7¼	14'-9¼	13'-0	9'-7⅛	20'-5½	14'-3⅞	12'-6	10'-3⅜	23'-10⅞	13'-9⅝	12'-0	11'-1⅛	28'-0¾	13'-1
	10'	15'-0	8'-9⅞	19'-2⅝	16'-1½	14'-0	9'-4⅜	22'-7¼	15'-9⅞	13'-6	10'-0⅜	26'-2⅜	15'-1½	13'-0	10'-9¾	30'-5⅞	14'-2⅝
12'	8'	12'-0	11'-11⅜	16'-0	13'-5⅛	11'-6	12'-8⅛	18'-8⅝	13'-1⅜	11'-0	13'-6⅞	21'-7½	12'-5¾	11'-0	14'-8⅛	25'-7⅝	11'-11½
	9'	13'-6	11'-8⅞	17'-7¼	14'-9¼	13'-0	12'-5⅜	20'-5½	14'-3⅞	12'-6	13'-3⅞	23'-10⅞	13'-9⅝	12'-0	14'-4¾	28'-0¾	13'-1
	10'	15'-0	11'-6¼	19'-2⅝	16'-1½	14'-0	12'-2⅝	22'-7¼	15'-9⅞	13'-6	13'-0⅞	26'-2⅜	15'-1½	13'-0	14'-1⅜	30'-5⅞	14'-2⅝
	11'	16'-0	11'-3¾	20'-9⅞	17'-5⅝	15'-6	11'-11⅞	24'-4⅛	17'-0½	15'-0	12'-9⅞	28'-5⅞	16'-5⅜	14'-6	13'-10	32'-11⅛	15'-4¼
	12'	17'-6	11'-1⅛	22'-5⅛	18'-9⅞	16'-6	11'-9⅛	26'-0⅞	18'-3⅛	16'-0	12'-6⅞	30'-4⅛	17'-6¼	15'-6	13'-6⅝	35'-9⅝	16'-8⅜

QUANTITIES

Span	Hgt.	0° Skew Conc. C.Y. 1Bbl.	0° Δc	0° Steel lbs. 1Bbl.	0° Δs	5° Skew Conc. C.Y. 1Bbl.	5° Δc	5° Steel lbs. 1Bbl.	5° Δs	10° Skew Conc. C.Y. 1Bbl.	10° Δc	10° Steel lbs. 1Bbl.	10° Δs	15° Skew Conc. C.Y. 1Bbl.	15° Δc	15° Steel lbs. 1Bbl.	15° Δs	20° Skew Conc. C.Y. 1Bbl.	20° Δc	20° Steel lbs. 1Bbl.	20° Δs
6'	3'	0.44	1.05	22	91	0.44	1.05	22	91	0.46	1.08	25	94	0.50	1.06	27	92	0.55	1.08	33	94
	4'	0.50	1.23	31	104	0.50	1.23	31	104	0.51	1.26	34	107	0.57	1.26	39	107	0.62	1.28	45	109
	5'	0.52	1.40	42	117	0.53	1.43	44	119	0.54	1.43	44	120	0.59	1.43	49	120	0.64	1.46	54	122
	6'	0.57	1.58	54	130	0.58	1.61	57	132	0.61	1.63	61	135	0.66	1.63	65	135	0.72	1.66	71	137
	7'	0.65	1.75	69	143	0.66	1.78	72	145	0.69	1.81	76	148	0.74	1.80	80	148	0.79	1.83	85	150
8'	3'	0.84	1.45	51	118	0.84	1.45	51	118	0.86	1.49	55	122	0.90	1.46	56	119	0.96	1.50	63	122
	4'	0.95	1.68	64	135	0.95	1.68	64	135	0.97	1.72	68	138	1.03	1.72	73	139	1.10	1.76	79	142
	5'	1.03	1.91	79	152	1.05	1.95	82	155	1.05	1.95	83	155	1.11	1.95	87	156	1.17	1.99	93	159
	6'	1.13	2.14	96	169	1.16	2.17	99	172	1.19	2.21	104	175	1.25	2.21	108	175	1.31	2.25	115	178
	7'	1.27	2.36	115	186	1.29	2.40	119	189	1.33	2.44	123	192	1.38	2.44	127	192	1.44	2.48	133	195
	8'	1.56	2.70	112	210	1.54	2.66	108	208	1.59	2.70	113	211	1.64	2.70	117	211	1.76	2.77	130	217
10'	3'	1.28	1.88	85	147	1.28	1.88	85	148	1.32	1.93	89	151	1.35	1.89	90	148	1.42	1.94	97	153
	4'	1.45	2.16	102	169	1.46	2.16	102	169	1.49	2.22	107	173	1.55	2.21	111	173	1.63	2.27	119	177
	5'	1.59	2.45	121	190	1.62	2.50	125	193	1.63	2.50	126	194	1.69	2.50	130	194	1.76	2.55	138	198
	6'	1.76	2.73	143	211	1.79	2.78	147	214	1.84	2.83	152	218	1.89	2.83	157	218	1.97	2.88	164	222
	7'	1.95	3.02	166	232	1.99	3.07	171	236	2.04	3.11	176	239	2.09	3.11	180	239	2.17	3.16	187	243
	8'	2.33	3.43	169	263	2.30	3.39	166	259	2.36	3.43	171	263	2.41	3.43	175	263	2.56	3.52	189	270
	9'	2.56	3.72	190	284	2.57	3.72	191	284	2.64	3.77	197	288	2.69	3.77	201	288	2.85	3.86	216	295
	10'	2.81	4.01	212	306	2.82	4.01	213	306	2.89	4.06	219	310	2.94	4.06	223	311	3.10	4.15	237	316
12'	8'	3.15	4.21	227	315	3.11	4.16	223	311	3.17	4.22	229	315	3.23	4.22	233	315	3.39	4.33	249	324
	9'	3.44	4.56	253	341	3.45	4.56	254	341	3.52	4.62	260	345	3.58	4.62	265	345	3.76	4.73	281	353
	10'	3.75	4.91	279	367	3.76	4.91	280	366	3.83	4.97	287	371	3.89	4.97	291	371	4.07	5.08	307	379
	11'	4.07	5.26	307	392	4.08	5.26	308	392	4.16	5.32	315	397	4.29	5.37	326	400	4.47	5.47	342	409
	12'	4.42	5.61	337	418	4.43	5.61	338	418	4.58	5.72	352	427	4.63	5.71	355	426	4.83	5.82	371	434

Span	Hgt.	25° Skew Conc. C.Y. 1Bbl.	25° Δc	25° Steel lbs. 1Bbl.	25° Δs	30° Skew Conc. C.Y. 1Bbl.	30° Δc	30° Steel lbs. 1Bbl.	30° Δs	35° Skew Conc. C.Y. 1Bbl.	35° Δc	35° Steel lbs. 1Bbl.	35° Δs	40° Skew Conc. C.Y. 1Bbl.	40° Δc	40° Steel lbs. 1Bbl.	40° Δs	45° Skew Conc. C.Y. 1Bbl.	45° Δc	45° Steel lbs. 1Bbl.	45° Δs
6'	3'	0.77	1.13	52	98	1.03	1.13	73	99	1.27	1.18	95	104	1.58	1.22	123	108	1.84	1.28	147	113
	4'	0.89	1.32	67	113	1.20	1.33	92	114	1.50	1.34	116	116	1.84	1.42	147	123	2.25	1.47	185	128
	5'	0.98	1.46	81	123	1.37	1.50	113	126	1.75	1.57	146	132	2.15	1.60	180	136	2.60	1.65	220	141
	6'	1.11	1.66	101	138	1.55	1.69	137	141	2.00	1.73	173	144	2.50	1.78	216	150	3.02	1.88	260	158
	7'	1.28	1.86	124	153	1.78	1.89	164	156	2.28	1.93	204	159	2.91	2.00	257	166	3.46	2.06	302	171
8'	3'	1.19	1.55	83	127	1.46	1.57	105	129	1.72	1.64	128	134	2.05	1.69	157	139	2.33	1.77	183	146
	4'	1.38	1.81	103	146	1.69	1.83	128	148	2.00	1.85	153	150	2.37	1.95	186	159	2.81	2.03	226	166
	5'	1.51	2.00	120	160	1.91	2.04	154	164	2.32	2.14	189	172	2.74	2.19	223	176	3.21	2.27	265	183
	6'	1.71	2.26	145	179	2.17	2.30	182	183	2.62	2.35	220	188	3.14	2.43	264	194	3.71	2.56	311	205
	7'	1.95	2.52	173	199	2.46	2.56	214	203	2.98	2.61	254	207	3.63	2.72	311	216	4.21	2.80	357	223
	8'	2.35	2.81	175	220	2.93	2.81	220	221	3.58	2.89	273	228	4.24	2.97	326	235	5.12	3.16	396	250
10'	3'	1.67	2.01	119	158	1.94	2.03	141	160	2.22	2.12	166	167	2.57	2.19	197	173	2.88	2.30	224	182
	4'	1.93	2.34	144	182	2.25	2.36	169	184	2.56	2.39	195	187	2.97	2.52	230	198	3.43	2.63	272	206
	5'	2.11	2.57	165	199	2.52	2.63	199	204	2.96	2.75	236	214	3.40	2.82	273	220	3.90	2.92	316	228
	6'	2.38	2.89	195	224	2.85	2.95	233	228	3.32	3.02	272	234	3.87	3.12	318	241	4.47	3.29	368	255
	7'	2.68	3.22	228	248	3.21	3.28	270	253	3.74	3.34	312	258	4.43	3.48	370	269	5.03	3.58	419	277
	8'	3.16	3.58	236	275	3.74	3.59	281	276	4.42	3.69	336	284	5.10	3.80	390	293	6.03	4.04	465	311
	9'	3.52	3.91	268	299	4.16	3.92	317	300	4.91	4.03	376	309	5.75	4.17	444	320	6.69	4.35	518	334
	10'	3.80	4.15	291	317	4.62	4.25	355	325	5.48	4.34	426	332	6.38	4.48	497	343	7.37	4.65	574	357
12'	8'	4.01	4.40	297	329	4.60	4.42	342	330	5.31	4.55	399	340	6.02	4.69	455	351	7.01	4.99	534	373
	9'	4.44	4.80	334	359	5.09	4.82	383	360	5.87	4.95	445	370	6.75	5.13	514	384	7.73	5.35	592	400
	10'	4.78	5.08	361	380	5.63	5.21	427	389	6.50	5.32	499	398	7.44	5.50	572	411	8.48	5.72	652	427
	11'	5.26	5.48	402	409	6.12	5.54	469	414	7.13	5.72	549	427	8.26	5.95	638	441	9.39	6.17	722	461
	12'	5.77	5.88	445	439	6.71	5.94	517	444	7.72	6.05	598	452	8.91	6.27	690	468	10.36	6.57	800	491

NOTATIONS:

Δc = Apron concrete quantity per additional barrel.

Δs = Apron steel quantity per additional barrel.

DESIGN APPROVED	ARIZONA DEPARTMENT OF TRANSPORTATION HIGHWAYS DIVISION STANDARD DRAWINGS	REVISION 7-88
APPROVED FOR DISTRIBUTION	OUTLET APRON DIMENSIONS & QUANTITIES 2 : 1 SLOPE	STANDARD NO. B-06.20

CADD FILENAME= ZFA
VIEW NAME=

DIMENSIONS

Span	Hgt.	0° Skew A	0° Skew B	0° Skew C	5° Skew A	5° Skew B	5° Skew C	5° Skew D	5° Skew E	10° Skew A	10° Skew B	10° Skew C	10° Skew D	10° Skew E
6'	3'	9'-10 7/8	4'-8 1/4	3'-7 1/4	10'-0 5/8	4'-8 1/2	2'-8 1/4	4'-8 3/4	10'-1 3/4	10'-1 1/4	4'-9 1/8	1'-9 3/8	5'-8 1/4	9'-10 1/8
	4'	12'-3 1/8	4'-8 1/4	4'-5 1/2	12'-5 1/2	4'-8 1/2	3'-4 1/8	5'-9 1/2	12'-5	12'-6 7/8	4'-9 1/8	2'-2 5/8	6'-11 1/4	12'-0 1/8
	5'	14'-7 1/4	4'-8 1/4	5'-3 3/4	14'-10 1/2	4'-8 1/2	3'-11 7/8	6'-10 1/8	14'-8 1/8	14'-6 1/2	4'-9 1/8	2'-6 3/4	8'-5 1/4	14'-7 1/4
	6'	16'-11 1/2	4'-8 1/4	6'-2 1/8	16'-9 3/4	4'-8 1/2	4'-6	7'-10 7/8	16'-11 3/8	17'-0	4'-9 1/8	3'-0	9'-8 1/4	16'-9 1/4
	7'	19'-3 5/8	4'-8 1/4	7'-0 3/8	19'-2 3/4	4'-8 1/2	5'-1 3/4	8'-11 1/2	19'-2 1/2	19'-5 5/8	4'-9 1/8	3'-5 1/8	10'-11 1/4	18'-11 1/4
8'	3'	9'-10 7/8	6'-10 1/4	3'-7 1/4	10'-0 5/8	6'-10 1/2	2'-8 1/4	4'-8 3/4	10'-1 3/4	10'-1 1/4	6'-11 1/2	1'-9 3/8	5'-8 1/4	9'-10 1/8
	4'	12'-3 1/8	6'-10 1/4	4'-5 1/2	12'-5 1/2	6'-10 1/2	3'-4 1/8	5'-9 1/2	12'-5	12'-6 7/8	6'-11 1/2	2'-2 5/8	6'-11 1/4	12'-0 1/8
	5'	14'-7 1/4	6'-10 1/4	5'-3 3/4	14'-10 1/2	6'-10 1/2	3'-11 7/8	6'-10 1/8	14'-8 1/8	14'-6 1/2	6'-11 1/2	2'-6 3/4	8'-5 1/4	14'-7 1/4
	6'	16'-11 1/2	6'-10 1/4	6'-2 1/8	16'-9 3/4	6'-10 1/2	4'-6	7'-10 7/8	16'-11 3/8	17'-0	6'-11 1/2	3'-0	9'-8 1/4	16'-9 1/4
	7'	19'-3 5/8	6'-10 1/4	7'-0 3/8	19'-2 3/4	6'-10 1/2	5'-1 3/4	8'-11 1/2	19'-2 1/2	19'-5 5/8	6'-11 1/2	3'-5 1/8	10'-11 1/4	18'-11 1/4
	8'	21'-9 7/8	5'-9 1/2	7'-11 3/8	21'-9 1/4	5'-9 3/4	5'-10	10'-1 3/8	21'-8 1/4	22'-0 1/8	5'-10 1/2	3'-10 5/8	12'-3 7/8	21'-4 1/4
10'	3'	9'-10 7/8	9'-0 1/4	3'-7 1/4	10'-0 5/8	9'-0 5/8	2'-8 1/4	4'-8 3/4	10'-1 3/4	10'-1 1/4	9'-1 7/8	1'-9 3/8	5'-8 1/4	9'-10 1/8
	4'	12'-3 1/8	9'-0 1/4	4'-5 1/2	12'-5 1/2	9'-0 5/8	3'-4 1/8	5'-9 1/2	12'-5	12'-6 7/8	9'-1 7/8	2'-2 5/8	6'-11 1/4	12'-0 1/8
	5'	14'-7 1/4	9'-0 1/4	5'-3 3/4	14'-10 1/2	9'-0 5/8	3'-11 7/8	6'-10 1/8	14'-8 1/8	14'-6 1/2	9'-1 7/8	2'-6 3/4	8'-5 1/4	14'-7 1/4
	6'	16'-11 1/2	9'-0 1/4	6'-2 1/8	16'-9 3/4	9'-0 5/8	4'-6	7'-10 7/8	16'-11 3/8	17'-0	9'-1 7/8	3'-0	9'-8 1/4	16'-9 1/4
	7'	19'-3 5/8	9'-0 1/4	7'-0 3/8	19'-2 3/4	9'-0 5/8	5'-1 3/4	8'-11 1/2	19'-2 1/2	19'-5 5/8	9'-1 7/8	3'-5 1/8	10'-11 1/4	18'-11 1/4
	8'	21'-9 7/8	7'-11 1/2	7'-11 3/8	21'-9 1/4	7'-11 3/4	5'-10	10'-1 3/8	21'-8 1/4	22'-0 1/8	8'-0 7/8	3'-10 5/8	12'-3 7/8	21'-4 1/4
	9'	24'-2 1/2	7'-9 3/8	8'-9 3/4	24'-2 1/2	7'-9 5/8	6'-5 7/8	11'-2 1/4	23'-11 7/8	24'-0	7'-10 3/4	4'-2 3/4	13'-7 1/4	23'-6 3/4
	10'	26'-7	7'-7 1/4	9'-8 1/8	26'-7 3/4	7'-7 1/2	7'-1 5/8	12'-3 1/8	26'-3 1/2	26'-5 3/4	7'-8 1/2	4'-8	14'-10 1/2	25'-9 1/8
12'	8'	21'-9 7/8	10'-3 1/2	7'-11 3/8	21'-9 1/4	10'-3 7/8	5'-10	10'-1 3/8	21'-8 1/4	22'-0 1/8	10'-5 1/4	3'-10 5/8	12'-3 7/8	21'-4 1/4
	9'	24'-2 1/2	10'-1	8'-9 3/4	24'-2 1/2	10'-1 3/4	6'-5 7/8	11'-2 1/4	23'-11 7/8	24'-0	10'-3 1/8	4'-2 3/4	13'-7 1/4	23'-6 3/4
	10'	26'-7	9'-11 1/4	9'-8 1/8	26'-7 3/4	9'-11 5/8	7'-1 5/8	12'-3 1/8	26'-3 1/2	26'-5 3/4	10'-1	4'-8	14'-10 1/2	25'-9 1/8
	11'	28'-11 1/2	9'-9 3/8	10'-6 1/2	29'-0 7/8	9'-9 1/2	7'-9 1/2	13'-4	28'-7 1/8	28'-11 3/8	9'-10 3/4	5'-1 1/4	16'-1 3/4	27'-11 5/8
	12'	31'-4	9'-7	11'-4 7/8	31'-6 1/8	9'-7 3/8	8'-5 3/8	14'-4 7/8	30'-10 3/4	31'-5 1/8	9'-8 5/8	5'-6 1/2	17'-8 1/8	30'-7 3/8

Span	Hgt.	15° Skew A	15° Skew B	15° Skew C	15° Skew D	15° Skew E	20° Skew A	20° Skew B	20° Skew C	20° Skew D	25° Skew A	25° Skew B	25° Skew C	25° Skew D
6'	3'	10'-1 1/8	4'-10 1/8	10 5/8"	6'-11	9'-10 1/2	10'-0	4'-11 3/4	8'-2 3/8	9'-9 1/4	9'-0	5'-2 5/8	9'-6 1/2	9'-6 1/2
	4'	12'-1	4'-10 1/8	1'-0 5/8	8'-4 1/8	11'-11	12'-0	4'-11 3/4	9'-9 3/4	11'-8 1/4	11'-0	5'-2 5/8	11'-3 3/4	11'-3 3/4
	5'	14'-6 7/8	4'-10 1/8	1'-3 1/4	9'-9 3/8	13'-11 5/8	14'-6	4'-11 3/4	11'-8 7/8	13'-11 7/8	13'-6	5'-2 5/8	13'-5 1/4	13'-5 1/4
	6'	17'-0 3/4	4'-10 1/8	1'-5 7/8	11'-6	16'-5 1/8	17'-0	4'-11 3/4	13'-4 1/8	15'-10 7/8	15'-6	5'-2 5/8	15'-6 5/8	15'-6 5/8
	7'	19'-6 5/8	4'-10 1/8	1'-8 1/2	12'-11 1/4	18'-5 5/8	19'-6	4'-11 3/4	15'-3 1/4	18'-2 3/8	17'-6	5'-2 5/8	17'-8 1/8	17'-8 1/8
8'	3'	10'-1 1/8	7'-1 1/8	10 5/8"	6'-11	9'-10 1/2	10'-0	7'-3 3/8	8'-2 3/8	9'-9 1/4	9'-0	7'-7 3/8	9'-6 1/2	9'-6 1/2
	4'	12'-1	7'-1 1/8	1'-0 5/8	8'-4 1/8	11'-11	12'-0	7'-3 3/8	9'-9 3/4	11'-8 1/4	11'-0	7'-7 3/8	11'-3 3/4	11'-3 3/4
	5'	14'-6 7/8	7'-1 1/8	1'-3 1/4	9'-9 3/8	13'-11 5/8	14'-6	7'-3 3/8	11'-8 7/8	13'-11 7/8	13'-6	7'-7 3/8	13'-5 1/4	13'-5 1/4
	6'	17'-0 3/4	7'-1 1/8	1'-5 7/8	11'-6	16'-5 1/8	17'-0	7'-3 3/8	13'-4 1/8	15'-10 7/8	15'-6	7'-7 3/8	15'-6 5/8	15'-6 5/8
	7'	19'-6 5/8	7'-1 1/8	1'-8 1/2	12'-11 1/4	18'-5 5/8	19'-6	7'-3 3/8	15'-3 1/4	18'-2 3/8	17'-6	7'-7 3/8	17'-8 1/8	17'-8 1/8
	8'	21'-7 1/8	5'-11 3/4	1'-10 5/8	14'-6 7/8	20'-9 5/8	21'-6	6'-1 1/2	17'-1 3/4	20'-5 1/4	20'-0	6'-4 7/8	19'-9 5/8	19'-9 5/8
10'	3'	10'-1 1/8	9'-4	10 5/8"	6'-11	9'-10 1/2	10'-0	9'-7	8'-2 3/8	9'-9 1/4	9'-0	10'-0	9'-6 1/2	9'-6 1/2
	4'	12'-1	9'-4	1'-0 5/8	8'-4 1/8	11'-11	12'-0	9'-7	9'-9 3/4	11'-8 1/4	11'-0	10'-0	11'-3 3/4	11'-3 3/4
	5'	14'-6 7/8	9'-4	1'-3 1/4	9'-9 3/8	13'-11 5/8	14'-6	9'-7	11'-8 7/8	13'-11 7/8	13'-6	10'-0	13'-5 1/4	13'-5 1/4
	6'	17'-0 3/4	9'-4	1'-5 7/8	11'-6	16'-5 1/8	17'-0	9'-7	13'-4 1/8	15'-10 7/8	15'-6	10'-0	15'-6 5/8	15'-6 5/8
	7'	19'-6 5/8	9'-4	1'-8 1/2	12'-11 1/4	18'-5 5/8	19'-6	9'-7	15'-3 1/4	18'-2 3/8	17'-6	10'-0	17'-8 1/8	17'-8 1/8
	8'	21'-7 1/8	8'-2 5/8	1'-10 5/8	14'-6 7/8	20'-9 5/8	21'-6	8'-5 1/4	17'-1 3/4	20'-5 1/4	20'-0	8'-9 1/2	19'-9 5/8	19'-9 5/8
	9'	24'-1 1/8	8'-0 3/8	2'-1 1/4	16'-3 7/8	23'-3 3/4	24'-0	8'-2 7/8	19'-1 1/2	22'-9 1/2	22'-0	8'-7 1/8	21'-11 3/4	21'-11 3/4
	10'	26'-7	7'-10 3/4	2'-3 7/8	17'-9 1/2	25'-4 7/8	26'-6	8'-0 5/8	20'-9 1/4	24'-9 1/8	24'-0	8'-4 3/4	24'-1 7/8	24'-1 7/8
12'	8'	21'-7 1/8	10'-7 5/8	1'-10 5/8	14'-6 7/8	20'-9 5/8	21'-6	10'-11	17'-1 3/4	20'-5 1/4	20'-0	11'-4 3/8	19'-9 5/8	19'-9 5/8
	9'	24'-1 1/8	10'-5 3/8	2'-1 1/4	16'-3 7/8	23'-3 3/4	24'-0	10'-8 3/4	19'-1 1/2	22'-9 1/2	22'-0	11'-2	21'-11 3/4	21'-11 3/4
	10'	26'-7	10'-3 1/8	2'-3 7/8	17'-9 1/2	25'-4 7/8	26'-6	10'-6 3/8	20'-9 1/4	24'-9 1/8	24'-0	10'-11 5/8	24'-1 7/8	24'-1 7/8
	11'	29'-1	10'-0 1/8	2'-6 1/2	19'-3 1/8	27'-6	29'-0	10'-4 1/8	20'-9	27'-1 1/4	26'-6	10'-9 1/8	26'-4 1/8	26'-4 1/8
	12'	31'-1	9'-10 3/4	2'-8 5/8	21'-0 1/8	30'-0 1/8	31'-0	10'-1 3/4	24'-4 3/4	29'-0 7/8	28'-6	10'-6 3/4	28'-2	28'-2

Span	Hgt.	30° Skew A	30° Skew B	30° Skew C	30° Skew D	35° Skew A	35° Skew B	35° Skew C	35° Skew D	40° Skew A	40° Skew B	40° Skew C	40° Skew D	45° Skew A	45° Skew B	45° Skew C	45° Skew D
6'	3'	8'-6	5'-6 3/8	10'-11 3/8	9'-2 1/4	7'-6	5'-10 7/8	12'-4 7/8	8'-8 1/4	7'-0	6'-4 1/2	14'-4 1/2	8'-3 5/8	7'-0	6'-11 1/8	16'-6 1/8	7'-8 3/8
	4'	10'-6	5'-6 3/8	13'-2 7/8	11'-1 3/8	9'-6	5'-10 7/8	14'-10 3/8	10'-4 7/8	9'-0	6'-4 1/2	16'-11 5/8	9'-9 5/8	8'-6	6'-11 1/8	19'-8 1/8	9'-2 1/8
	5'	12'-6	5'-6 3/8	15'-6 1/2	13'-0 1/2	11'-6	5'-10 7/8	17'-8 3/4	12'-5	10'-6	6'-4 1/2	20'-0	11'-6 5/8	10'-0	6'-11 1/8	22'-10 1/4	10'-7 7/8
	6'	14'-6	5'-6 3/8	17'-10 1/8	14'-11 5/8	13'-6	5'-10 7/8	20'-2 1/4	14'-1 5/8	12'-6	6'-4 1/2	23'-0 3/8	13'-3 5/8	12'-0	6'-11 1/8	26'-0 1/4	12'-1 5/8
	7'	16'-6	5'-6 3/8	20'-1 5/8	16'-10 3/4	15'-0	5'-10 7/8	22'-7 3/4	15'-10 1/4	14'-0	6'-4 1/2	26'-0 3/4	15'-0 5/8	13'-6	6'-11 1/8	29'-2 3/8	13'-7 3/8
8'	3'	8'-6	8'-0 3/8	10'-11 3/8	9'-2 1/4	7'-6	8'-6 5/8	12'-4 7/8	8'-8 1/4	7'-0	9'-2 3/8	14'-4 1/2	8'-3 5/8	7'-0	9'-11 7/8	16'-6 1/8	7'-8 3/8
	4'	10'-6	8'-0 3/8	13'-2 7/8	11'-1 3/8	9'-6	8'-6 5/8	14'-10 3/8	10'-4 7/8	9'-0	9'-2 3/8	16'-11 5/8	9'-9 5/8	8'-6	9'-11 7/8	19'-8 1/8	9'-2 1/8
	5'	12'-6	8'-0 3/8	15'-6 1/2	13'-0 1/2	11'-6	8'-6 5/8	17'-8 3/4	12'-5	10'-6	9'-2 3/8	20'-0	11'-6 5/8	10'-0	9'-11 7/8	22'-10 1/4	10'-7 7/8
	6'	14'-6	8'-0 3/8	17'-10 1/8	14'-11 5/8	13'-6	8'-6 5/8	20'-2 1/4	14'-1 5/8	12'-6	9'-2 3/8	23'-0 3/8	13'-3 5/8	12'-0	9'-11 7/8	26'-0 1/4	12'-1 5/8
	7'	16'-6	8'-0 3/8	20'-1 5/8	16'-10 3/4	15'-0	8'-6 5/8	22'-7 3/4	15'-10 1/4	14'-0	9'-2 3/8	26'-0 3/4	15'-0 5/8	13'-6	9'-11 7/8	29'-2 3/8	13'-7 3/8
	8'	18'-6	6'-9	22'-10 3/4	19'-2 1/2	17'-0	7'-2 1/8	26'-1 1/8	18'-3 1/4	16'-0	7'-8 3/8	29'-5	16'-11 3/4	15'-0	8'-3 3/4	33'-9 1/2	15'-9 1/8
10'	3'	8'-6	10'-6 3/8	10'-11 3/8	9'-2 1/4	7'-6	11'-2 3/8	12'-4 7/8	8'-8 1/4	7'-0	12'-0 3/8	14'-4 1/2	8'-3 5/8	7'-0	13'-0 3/4	16'-6 1/8	7'-8 3/8
	4'	10'-6	10'-6 3/8	13'-2 7/8	11'-1 3/8	9'-6	11'-2 3/8	14'-10 3/8	10'-4 7/8	9'-0	12'-0 3/8	16'-11 5/8	9'-9 5/8	8'-6	13'-0 3/4	19'-8 1/8	9'-2 1/8
	5'	12'-6	10'-6 3/8	15'-6 1/2	13'-0 1/2	11'-6	11'-2 3/8	17'-8 3/4	12'-5	10'-6	12'-0 3/8	20'-0	11'-6 5/8	10'-0	13'-0 3/4	22'-10 1/4	10'-7 7/8
	6'	14'-6	10'-6 3/8	17'-10 1/8	14'-11 5/8	13'-6	11'-2 3/8	20'-2 1/4	14'-1 5/8	12'-6	12'-0 3/8	23'-0 3/8	13'-3 5/8	12'-0	13'-0 3/4	26'-0 1/4	12'-1 5/8
	7'	16'-6	10'-6 3/8	20'-1 5/8	16'-10 3/4	15'-0	11'-2 3/8	22'-7 3/4	15'-10 1/4	14'-0	12'-0 3/8	26'-0 3/4	15'-0 5/8	13'-6	13'-0 3/4	29'-2 3/8	13'-7 3/8
	8'	18'-6	9'-3	22'-10 3/4	19'-2 1/2	17'-0	9'-9 7/8	26'-1 1/8	18'-3 1/4	16'-0	10'-6 3/8	29'-5	16'-11 3/4	15'-0	11'-4 1/2	33'-9 1/2	15'-9 1/8
	9'	20'-6	9'-0 1/2	25'-3 1/4	21'-2 3/8	19'-0	9'-7 1/8	28'-7 3/4	20'-0 3/4	17'-6	10'-3 3/8	32'-6 7/8	18'-9 5/8	17'-0	11'-1 1/8	37'-1 1/2	17'-3 3/4
	10'	22'-6	8'-9 7/8	27'-7 3/4	23'-2 3/8	20'-6	9'-4 3/8	31'-7 3/8	22'-1 5/8	19'-6	10'-0 3/8	35'-8 3/4	20'-7 1/2	18'-6	10'-9 3/4	40'-5 1/2	18'-10 3/8
12'	8'	18'-6	11'-11 3/8	22'-10 3/4	19'-2 1/2	17'-0	12'-8 1/8	26'-1 1/8	18'-3 1/4	16'-0	13'-6 7/8	29'-5	16'-11 3/4	15'-0	14'-8 1/8	33'-9 1/2	15'-9 1/8
	9'	20'-6	11'-8 7/8	25'-3 1/4	21'-2 3/8	19'-0	12'-5 3/8	28'-7 3/4	20'-0 3/4	17'-6	13'-3 7/8	32'-6 7/8	18'-9 5/8	17'-0	14'-4 3/4	37'-1 1/2	17'-3 3/4
	10'	22'-6	11'-6 1/4	27'-7 3/4	23'-2 3/8	20'-6	12'-2 5/8	31'-7 3/8	22'-1 5/8	19'-6	13'-0 7/8	35'-8 3/4	20'-7 1/2	18'-6	14'-1 3/8	40'-5 1/2	18'-10 3/8
	11'	24'-6	11'-3 3/4	30'-0 1/8	25'-2 1/4	22'-6	11'-11 7/8	34'-2	23'-11 1/8	21'-0	12'-9 7/8	38'-10 5/8	22'-5 3/8	20'-0	13'-10	43'-9 5/8	20'-5 1/8
	12'	26'-6	11'-1 1/8	32'-4 5/8	27'-2 1/8	24'-6	11'-9 1/8	36'-8 3/4	25'-8 5/8	23'-0	12'-6 7/8	41'-7 1/4	24'-0 1/4	22'-0	13'-6 5/8	47'-7	22'-2 1/4

QUANTITIES

Span	Hgt.	0° Skew Conc. C.Y. 1Bbl.	0° Skew Conc. C.Y. Δc	0° Skew Steel lbs. 1Bbl.	0° Skew Steel lbs. Δs	5° Skew Conc. C.Y. 1Bbl.	5° Skew Conc. C.Y. Δc	5° Skew Steel lbs. 1Bbl.	5° Skew Steel lbs. Δs	10° Skew Conc. C.Y. 1Bbl.	10° Skew Conc. C.Y. Δc	10° Skew Steel lbs. 1Bbl.	10° Skew Steel lbs. Δs	15° Skew Conc. C.Y. 1Bbl.	15° Skew Conc. C.Y. Δc	15° Skew Steel lbs. 1Bbl.	15° Skew Steel lbs. Δs	20° Skew Conc. C.Y. 1Bbl.	20° Skew Conc. C.Y. Δc	20° Skew Steel lbs. 1Bbl.	20° Skew Steel lbs. Δs
6'	3'	0.41	1.46	46	122	0.42	1.49	48	124	0.42	1.49	48	124	0.45	1.52	52	126	0.50	1.55	57	128
	4'	0.56	1.75	69	143	0.57	1.78	72	145	0.58	1.78	71	146	0.62	1.78	75	146	0.67	1.81	79	148
	5'	0.72	2.04	98	165	0.75	2.07	101	167	0.77	2.07	103	167	0.78	2.07	102	167	0.97	2.12	112	172
	6'	0.97	2.33	132	186	0.98	2.33	133	186	1.02	2.36	137	188	1.07	2.38	141	191	1.12	2.41	144	193
	7'	1.28	2.62	172	208	1.29	2.62	173	208	1.34	2.65	176	210	1.39	2.67	179	212	1.50	2.73	188	217
8'	3'	0.93	1.98	85	158	0.95	2.02	88	161	0.96	2.03	88	161	1.00	2.07	93	164	1.06	2.11	98	167
	4'	1.18	2.36	115	186	1.20	2.40	119	189	1.21	2.42	118	189	1.25	2.40	121	190	1.31	2.44	127	193
	5'	1.44	2.75	151	214	1.47	2.78	155	217	1.50	2.78	157	217	1.51	2.78	156	218	1.62	2.86	167	224
	6'	1.78	3.13	192	243	1.79	3.12	193	243	1.84	3.16	198	246	1.90	3.20	202	249	1.96	3.24	206	252
	7'	2.19	3.51	239	271	2.19	3.51	239	271	2.25	3.54	244	274	2.31	3.58	247	277	2.44	3.65	258	283
	8'	2.77	3.91	250	301	2.78	3.91	251	301	2.85	3.95	255	304	2.88	3.95	256	304	3.04	4.02	266	310
10'	3'	1.52	2.54	128	197	1.55	2.59	132	200	1.56	2.60	133	201	1.61	2.65	138	205	1.68	2.70	145	206
	4'	1.87	3.02	166	232	1.90	3.07	171	236	1.91	3.07	170	236	1.95	3.07	174	236	2.02	3.12	180	240
	5'	2.23	3.49	210	267	2.27	3.54	214	271	2.30	3.54	216	271	2.31	3.54	216	271	2.44	3.64	228	279
	6'	2.67	3.97	258	303	2.68	3.97	259	303	2.74	4.01	265	306	2.81	4.06	270	310	2.89	4.11	275	314
	7'	3.18	4.44	313	338	3.19	4.44	313	338	3.25	4.49	319	341	3.33	4.54	323	345	3.48	4.63	335	352
	8'	3.87	4.95	332	376	3.88	4.95	333	376	3.95	5.00	338	379	3.99	4.99	338	379	4.16	5.08	351	386
	9'	4.48	5.43	387	411	4.49	5.43	388	411	4.51	5.43	388	411	4.68	5.52	400	418	4.87	5.60	412	425
	10'	5.15	5.91	447	447	5.16	5.91	447	447	5.18	5.91	446	447	5.36	6.00	458	454	5.55	6.08	468	461
12'	8'	5.01	6.04	414	450	5.02	6.03	415	450	5.10	6.09	420	454	5.14	6.09	421	454	5.33	6.20	435	463
	9'	5.72	6.61	477	493	5.73	6.61	477	493	5.75	6.61	477	493	5.94	6.72	492	501	6.15	6.82	505	509
	10'	6.49	7.19	544	536	6.50	7.19	544	536	6.52	7.18	543	536	6.72	7.29	557	544	6.93	7.40	569	552
	11'	7.33	7.76.	616	579	7.33	7.76	615	578	7.35	7.76	614	578	7.56	7.87	626	587	7.89	8.02	648	598
	12'	8.22	8.34	692	621	8.23	8.34	691	621	8.35	8.39	699	625	8.49	8.43	707	628	8.72	8.54	717	636

Span	Hgt.	25° Skew Conc. C.Y. 1Bbl.	25° Skew Conc. C.Y. Δc	25° Skew Steel lbs. 1Bbl.	25° Skew Steel lbs. Δs	30° Skew Conc. C.Y. 1Bbl.	30° Skew Conc. C.Y. Δc	30° Skew Steel lbs. 1Bbl.	30° Skew Steel lbs. Δs	35° Skew Conc. C.Y. 1Bbl.	35° Skew Conc. C.Y. Δc	35° Skew Steel lbs. 1Bbl.	35° Skew Steel lbs. Δs	40° Skew Conc. C.Y. 1Bbl.	40° Skew Conc. C.Y. Δc	40° Skew Steel lbs. 1Bbl.	40° Skew Steel lbs. Δs	45° skew Conc. C.Y. 1Bbl.	45° skew Conc. C.Y. Δc	45° skew Steel lbs. 1Bbl.	45° skew Steel lbs. Δs
6'	3'	0.88	1.52	86	128	1.23	1.53	113	129	1.59	1.51	140	128	1.97	1.54	173	132	2.36	1.62	206	139
	4'	1.11	1.78	112	147	1.59	1.81	150	150	2.00	1.79	181	149	2.45	1.82	217	152	2.96	1.88	260	158
	5'	1.41	2.10	150	170	1.97	2.09	194	171	2.51	2.09	236	171	3.01	2.08	275	172	3.59	2.14	320	177
	6'	1.79	2.38	195	191	2.44	2.37	244	191	3.05	2.37	290	192	3.70	2.39	341	194	4.40	2.44	390	200
	7'	2.25	2.66	245	212	2.99	2.65	300	212	3.65	2.61	349	210	4.47	2.65	412	214	5.30	2.70	463	219
8'	3'	1.43	2.07	126	166	1.79	2.09	154	167	2.14	2.06	180	166	2.54	2.11	215	171	2.96	2.22	251	180
	4'	1.75	2.41	159	191	2.24	2.46	198	195	2.65	2.43	228	193	3.11	2.48	266	198	3.65	2.56	311	205
	5'	2.15	2.83	205	221	2.71	2.83	249	222	3.25	2.83	291	223	3.76	2.82	330	224	4.36	2.90	377	230
	6'	2.62	3.19	256	249	3.27	3.19	305	249	3.89	3.19	351	250	4.55	3.22	403	253	5.27	3.30	454	260
	7'	3.17	3.56	314	276	3.92	3.56	368	277	4.56	3.51	416	274	5.41	3.56	481	279	6.26	3.64	534	285
	8'	3.91	3.97	331	307	4.81	3.96	402	307	5.66	3.95	467	306	6.50	3.98	528	310	7.54	4.06	603	316
10'	3'	2.05	2.66	172	206	2.42	2.69	201	209	2.76	2.65	227	207	3.18	2.72	262	212	3.64	2.86	301	224
	4'	2.46	3.08	212	238	2.96	3.14	252	243	3.36	3.11	282	241	3.85	3.18	321	247	4.41	3.29	368	255
	5'	2.96	3.60	266	276	3.53	3.60	310	277	4.08	3.61	352	278	4.59	3.61	392	279	5.21	3.71	441	287
	6'	3.53	4.06	324	310	4.19	4.06	374	311	4.81	4.07	420	312	5.48	4.11	473	315	6.23	4.21	525	324
	7'	4.19	4.52	389	344	4.93	4.52	444	345	5.57	4.46	491	341	6.43	4.54	557	347	7.31	4.64	612	356
	8'	5.02	5.03	415	383	5.93	5.02	486	382	6.77	5.01	551	382	7.63	5.06	613	386	8.69	5.16	690	394
	9'	5.79	5.50	482	417	6.80	5.49	560	417	7.74	5.48	630	417	8.73	5.49	704	418	10.04	5.67	789	432
	10'	6.62	5.97	554	452	7.75	5.96	639	452	8.81	5.92	723	449	10.05	6.00	806	456	11.34	6.10	889	465
12'	8'	6.19	6.14	499	458	7.10	6.14	570	458	7.94	6.13	635	457	8.82	6.19	698	462	9.91	6.33	776	472
	9'	7.05	6.70	573	500	8.07	6.70	651	499	9.01	6.69	721	499	10.01	6.72	795	501	11.37	6.94	884	518
	10'	7.99	7.26	653	541	9.11	7.25	737	541	10.17	7.22	821	538	11.44	7.32	905	546	12.76	7.46	991	557
	11'	9.07	7.89	741	588	10.23	7.81	829	582	11.44	7.78	919	580	12.78	7.85	1016	585	14.23	7.98	1103	595
	12'	10.02	8.40	818	626	11.45	8.37	927	624	12.77	8.34	1023	622	14.26	8.41	1124	627	16.08	8.16	1245	643

NOTATIONS:

Δc = Apron concrete quantity per additional barrel.

Δs = Apron steel quantity per additional barrel.

DESIGN APPROVED	ARIZONA DEPARTMENT OF TRANSPORTATION HIGHWAYS DIVISION STANDARD DRAWINGS	REVISION
T. D. Davis		7-88
APPROVED FOR DISTRIBUTION	OUTLET APRON DIMENSIONS & QUANTITIES 4:1 SLOPE	STANDARD NO.
T. A. Bryant, II.		B-06.30

Registered Professional Engineer (Civil) 9910 F. DANIEL DAVIS Arizona U.S.A.

CADD FILENAME: ZFA *51,4*B0630
VIEW NAME: HW4

DIMENSIONS

Span	Hgt.	0° Skew			5° Skew					10° Skew					15° Skew					20° Skew			
		A	B	C	A	B	C	D	E	A	B	C	D	E	A	B	C	D	E	A	B	C	D
6'	3'	12'-3⅞	4'-8¼	4'-5½	12'-5½	4'-8½	3'-4⅞	5'-6⅞	11'-11½	12'-0⅞	4'-9⅛	2'-1½	6'-11¼	12'-0⅞	12'-1	4'-10⅞	1'-0⅝	8'-4⅛	11'-11	12'-0	4'-11¾	9'-5⅞	11'-3⅞
	4'	15'-0⅞	4'-8¼	5'-5⅞	15'-4⅜	4'-8½	4'-1⅜	7'-0⅝	15'-1⅜	15'-0⅞	4'-9⅛	2'-7¾	8'-5¼	14'-7¼	15'-0⅞	4'-10⅞	1'-3⅞	10'-0¾	14'-4½	15'-0	4'-11¾	11'-8⅞	13'-11⅞
	5'	17'-10¾	4'-8¼	6'-6⅞	18'-3⅛	4'-8½	4'-10⅞	8'-3⅞	17'-10¼	17'-11⅞	4'-9⅛	3'-2⅞	10'-2¼	17'-7⅝	18'-0¾	4'-10⅞	1'-7	12'-0⅞	17'-2⅞	18'-0	4'-11¾	13'-11⅞	16'-8
	6'	20'-8⅝	4'-8¼	7'-6½	21'-1⅞	4'-8½	5'-8	9'-7⅛	20'-6⅞	20'-11¼	4'-9⅛	3'-8⅜	11'-8¼	20'-2⅞	21'-0⅝	4'-10⅞	1'-10¼	13'-9½	19'-8⅞	21'-0	4'-11¾	15'-11	18'-11⅝
	7'	23'-6⅜	4'-8¼	8'-6¾	24'-0⅝	4'-8½	6'-5⅜	10'-10⅜	23'-3½	23'-10¾	4'-9⅛	4'-2½	13'-2¼	22'-10	24'-0½	4'-10⅞	2'-1¼	15'-9⅝	22'-6⅞	24'-0	4'-11¾	18'-2	21'-7¾
8'	3'	12'-3⅞	6'-10¼	4'-5½	12'-5½	6'-10½	3'-4⅞	5'-6⅞	11'-11½	12'-0⅞	6'-11½	2'-1½	6'-11¼	12'-0⅞	12'-1	7'-1⅞	1'-0⅝	8'-4⅛	11'-11	12'-0	7'-3⅜	9'-5⅞	11'-3⅞
	4'	15'-0⅞	6'-10¼	5'-5⅞	15'-4⅜	6'-10½	4'-1⅜	7'-0⅝	15'-1⅜	15'-0⅞	6'-11½	2'-7¾	8'-5¼	14'-7¼	15'-0⅞	7'-1⅞	1'-3⅞	10'-0¾	14'-4½	15'-0	7'-3⅜	11'-8⅞	13'-11⅞
	5'	17'-10¾	6'-10¼	6'-6⅞	18'-3⅛	6'-10½	4'-10⅞	8'-3⅞	17'-10¼	17'-11⅞	6'-11½	3'-2⅞	10'-2¼	17'-7⅝	18'-0¾	7'-1⅞	1'-7	12'-0⅞	17'-2⅞	18'-0	7'-3⅜	13'-11⅞	16'-8
	6'	20'-8⅝	6'-10¼	7'-6½	21'-1⅞	6'-10½	5'-8	9'-7⅛	20'-6⅞	20'-11¼	6'-11½	3'-8⅜	11'-8¼	20'-2⅞	21'-0⅝	7'-1⅞	1'-10¼	13'-9½	19'-8⅞	21'-0	7'-3⅜	15'-11	18'-11⅝
	7'	23'-6⅜	6'-10¼	8'-6¾	24'-0⅝	6'-10½	6'-5⅜	10'-10⅜	23'-3½	23'-10¾	6'-11½	4'-2½	13'-2¼	22'-10	24'-0½	7'-1⅞	2'-1¼	15'-9⅝	22'-6⅞	24'-0	7'-3⅜	18'-2	21'-7¾
10'	3'	12'-3⅞	9'-0¼	4'-5½	12'-5½	9'-0⅝	3'-4⅞	5'-6⅞	11'-11½	12'-0⅞	9'-1⅞	2'-1½	6'-11¼	12'-0⅞	12'-1	9'-4	1'-0⅝	8'-4⅛	11'-11	12'-0	9'-7	9'-5⅞	11'-3⅞
	4'	15'-0⅞	9'-0¼	5'-5⅞	15'-4⅜	9'-0⅝	4'-1⅜	7'-0⅝	15'-1⅜	15'-0⅞	9'-1⅞	2'-7¾	8'-5¼	14'-7¼	15'-0⅞	9'-4	1'-3⅞	10'-0¾	14'-4½	15'-0	9'-7	11'-8⅞	13'-11⅞
	5'	17'-10¾	9'-0¼	6'-6⅞	18'-3⅛	9'-0⅝	4'-10⅞	8'-3⅞	17'-10¼	17'-11⅞	9'-1⅞	3'-2⅞	10'-2¼	17'-7⅝	18'-0¾	9'-4	1'-7	12'-0⅞	17'-2⅞	18'-0	9'-7	13'-11⅞	16'-8
	6'	20'-8⅝	9'-0¼	7'-6½	21'-1⅞	9'-0⅝	5'-8	9'-7⅛	20'-6⅞	20'-11¼	9'-1⅞	3'-8⅜	11'-8¼	20'-2⅞	21'-0⅝	9'-4	1'-10¼	13'-9½	19'-8⅞	21'-0	9'-7	15'-11	18'-11⅝
	7'	23'-6⅜	9'-0¼	8'-6¾	24'-0⅝	9'-0⅝	6'-5⅜	10'-10⅜	23'-3½	23'-10¾	9'-1⅞	4'-2½	13'-2¼	22'-10	24'-0	9'-4	2'-1¼	15'-9⅝	22'-6⅞	24'-0	9'-7	18'-2	21'-7¾
12'	8'	27'-0	10'-3½	9'-9⅞	27'-1	10'-3⅞	7'-3⅞	12'-2¾	26'-2⅝	26'-11¼	10'-5¼	4'-9	15'-0⅞	26'-1⅜	27'-0⅞	10'-7⅝	2'-4⅜	17'-8¾	25'-3¾	27'-0	10'-11	20'-8¼	24'-7¾

Span	Hgt.	25° Skew				30° Skew				35° Skew				40° Skew				45° Skew			
		A	B	C	D	A	B	C	D	A	B	C	D	A	B	C	D	A	B	C	D
6'	3'	11'-0	5'-2⅝	10'-11½	10'-11½	10'-0	5'-6⅜	12'-5¾	10'-5⅝	9'-0	5'-10⅞	14'-5⅜	10'-1⅜	8'-6	6'-4½	16'-1¼	9'-3⅝	8'-0	6'-11⅞	18'-3⅞	8'-6½
	4'	13'-6	5'-2⅝	13'-5¼	13'-5¼	12'-6	5'-6⅜	15'-6½	13'-0½	11'-6	5'-10⅞	17'-3⅞	12'-1½	10'-6	6'-4½	19'-6⅞	11'-3⅝	10'-0	6'-11⅞	21'-11¾	10'-2¾
	5'	16'-0	5'-2⅝	15'-10⅞	15'-10⅞	14'-6	5'-6⅜	18'-2⅝	15'-3½	13'-6	5'-10⅞	20'-1⅞	14'-5	12'-6	6'-4½	23'-0⅜	13'-3⅝	12'-0	6'-11⅞	25'-6⅞	11'-11⅞
	6'	19'-0	5'-2⅝	18'-4⅝	18'-4⅝	17'-0	5'-6⅜	20'-10¾	17'-6½	15'-6	5'-10⅞	23'-5½	16'-5⅛	14'-6	6'-4½	26'-6	15'-3⅝	13'-6	6'-11⅞	29'-7¾	13'-9⅞
	7'	21'-6	5'-2⅝	20'-10¾	20'-10¾	19'-6	5'-6⅜	23'-7	19'-9½	18'-0	5'-10⅞	26'-8⅞	18'-8⅝	16'-6	6'-4½	29'-11½	17'-3⅝	15'-6	6'-11⅞	33'-3⅞	15'-6¼
8'	3'	11'-0	7'-7⅜	10'-11½	10'-11½	10'-0	8'-0⅜	12'-5¾	10'-5⅝	9'-0	8'-6⅝	14'-5⅜	10'-1⅜	8'-6	9'-2⅞	16'-1¼	9'-3⅝	8'-0	9'-11⅞	18'-3⅞	8'-6½
	4'	13'-6	7'-7⅜	13'-5¼	13'-5¼	12'-6	8'-0⅜	15'-6½	13'-0½	11'-6	8'-6⅝	17'-3⅞	12'-1½	10'-6	9'-2⅞	19'-6⅞	11'-3⅝	10'-0	9'-11⅞	21'-11¾	10'-2¾
	5'	16'-0	7'-7⅜	15'-10⅞	15'-10⅞	14'-6	8'-0⅜	18'-2⅝	15'-3½	13'-6	8'-6⅝	20'-1⅞	14'-5	12'-6	9'-2⅞	23'-0⅜	13'-3⅝	12'-0	9'-11⅞	25'-6⅞	11'-11⅞
	6'	19'-0	7'-7⅜	18'-4⅝	18'-4⅝	17'-0	8'-0⅜	20'-10¾	17'-6½	15'-6	8'-6⅝	23'-5½	16'-5⅛	14'-6	9'-2⅞	26'-6	15'-3⅝	13'-6	9'-11⅞	29'-7¾	13'-9⅞
	7'	21'-6	7'-7⅜	20'-10¾	20'-10¾	19'-6	8'-0⅜	23'-7	19'-9½	18'-0	8'-6⅝	26'-8⅞	18'-8⅝	16'-6	9'-2⅞	29'-11½	17'-3⅝	15'-6	9'-11⅞	33'-3⅞	15'-6¼
10'	3'	11'-0	10'-0	10'-11½	10'-11½	10'-0	10'-6⅜	12'-5¾	10'-5⅝	9'-0	11'-2⅜	14'-5⅜	10'-1⅜	8'-6	12'-0⅜	16'-1¼	9'-3⅝	8'-0	13'-0¾	18'-3⅞	8'-6½
	4'	13'-6	10'-0	13'-5¼	13'-5¼	12'-6	10'-6⅜	15'-6½	13'-0½	11'-6	11'-2⅜	17'-3⅞	12'-1½	10'-6	12'-0⅜	19'-6⅞	11'-3⅝	10'-0	13'-0¾	21'-11¾	10'-2¾
	5'	16'-0	10'-0	15'-10⅞	15'-10⅞	14'-6	10'-6⅜	18'-2⅝	15'-3½	13'-6	11'-2⅜	20'-1⅞	14'-5	12'-6	12'-0⅜	23'-0⅜	13'-3⅝	12'-0	13'-0¾	25'-6⅞	11'-11⅞
	6'	19'-0	10'-0	18'-4⅝	18'-4⅝	17'-0	10'-6⅜	20'-10¾	17'-6½	15'-6	11'-2⅜	23'-5½	16'-5⅛	14'-6	12'-0⅜	26'-6	15'-3⅝	13'-6	13'-0¾	29'-7¾	13'-9⅞
	7'	21'-6	10'-0	20'-10¾	20'-10¾	19'-6	10'-6⅜	23'-7	19'-9½	18'-0	11'-2⅜	26'-8⅞	18'-8⅝	16'-6	12'-0⅜	29'-11½	17'-3⅝	15'-6	13'-0¾	33'-3⅞	15'-6¼
12'	8'	24'-0	11'-4⅜	23'-8¼	23'-8¼	22'-0	11'-11¾	26'-8⅝	22'-5⅛	20'-0	12'-8⅛	30'-2¼	21'-1⅝	18'-6	13'-6⅞	33'-8⅞	19'-5¾	17'-6	14'-8⅛	37'-10½	17'-7⅞

QUANTITIES

Span	Hgt.	0° Skew				5° Skew				10° Skew				15° Skew				20° Skew			
		Conc.	C.Y.	Steel lb.		Conc.	C.Y.	Steel lbs.		Conc.	C.Y.	Steel lbs.		Conc.	C.Y.	Steel lbs.		Conc.	C.Y.	Steel lbs.	
		1Bbl.	Δc	1Bbl.	Δs	1Bbl.	Δc	1Bbl.	Δs	1Bbl.	Δc	1Bbl.	Δs	1Bbl.	Δc	1Bbl.	Δs	1Bbl.	Δc	1Bbl.	Δs
6'	3'	0.47	1.75	69	143	0.47	1.75	69	143	0.49	1.75	70	143	0.53	1.78	75	146	0.54	1.78	74	146
	4'	0.73	2.10	104	169	0.75	2.13	108	171	0.75	2.10	105	169	0.79	2.13	108	172	0.84	2.15	111	174
	5'	1.04	2.45	147	195	1.07	2.47	151	197	1.09	2.47	152	197	1.15	2.50	156	199	1.20	2.53	158	202
	6'	1.46	2.79	199	221	1.50	2.82	203	223	1.52	2.82	203	223	1.57	2.85	205	225	1.63	2.87	205	228
	7'	1.98	3.14	258	247	2.03	3.17	262	249	2.05	3.17	261	249	2.17	3.22	269	253	2.24	3.24	268	255
8'	3'	1.09	2.36	115	186	1.09	2.37	114	186	1.11	2.37	116	186	1.16	2.40	121	190	1.18	2.41	121	190
	4'	1.47	2.82	159	220	1.50	2.86	163	223	1.48	2.82	159	220	1.54	2.86	163	223	1.60	2.90	167	227
	5'	1.89	3.28	210	254	1.93	3.32	215	257	1.95	3.31	216	257	2.01	3.35	220	260	2.08	3.39	223	263
	6'	2.42	3.73	270	288	2.47	3.77	274	291	2.49	3.77	274	291	2.55	3.81	277	294	2.62	3.84	278	297
	7'	3.06	4.19	337	322	3.12	4.23	342	325	3.13	4.23	341	325	3.27	4.30	351	330	3.35	4.33	350	333
	8'	4.05	4.75	378	364	3.99	4.71	370	361	4.07	4.75	377	363	4.16	4.78	377	366	4.33	4.85	385	372
10'	3'	1.78	3.02	166	232	1.78	3.02	166	232	1.80	3.02	168	232	1.86	3.07	174	236	1.88	3.08	173	237
	4'	2.28	3.59	219	274	2.32	3.64	224	278	2.29	3.59	219	275	2.36	3.64	225	279	2.43	3.69	230	283
	5'	2.82	4.16	280	317	2.87	4.21	285	320	2.89	4.20	286	320	2.96	4.25	291	324	3.04	4.30	295	328
	6'	3.47	4.73	348	359	3.53	4.77	354	363	3.55	4.77	354	363	3.63	4.82	357	366	3.71	4.87	359	370
	7'	4.23	5.30	425	401	4.30	5.34	430	405	4.31	5.34	429	405	4.47	5.43	441	412	4.56	5.48	441	416
	8'	5.37	6.00	477	453	5.29	5.95	468	450	5.39	5.99	475	453	5.49	6.04	477	457	5.68	6.12	486	464
	9'	6.29	6.57	559	496	6.30	6.57	558	496	6.32	6.57	555	496	6.51	6.66	566	503	6.72	6.74	573	510
	10'	7.31	7.15	647	539	7.32	7.15	646	539	7.33	7.14	641	539	7.54	7.23	650	546	7.79	7.31	655	552
12'	8'	6.73	7.29	576	543	6.64	7.23	566	539	6.75	7.28	574	543	6.86	7.34	576	547	7.07	7.45	587	556

Span	Hgt.	25° Skew				30° Skew				35° Skew				40° Skew				45° Skew			
		Conc.	C.Y.	Steel lbs.		Conc.	C.Y.	Steel lbs.		Conc.	C.Y.	Steel lbs.		Conc.	C.Y.	Steel lbs.		Conc.	C.Y.	Steel lbs.	
		1Bbl.	Δc	1Bbl.	Δs	1Bbl.	Δc	1Bbl.	Δs	1Bbl.	Δc	1Bbl.	Δs	1Bbl.	Δc	1Bbl.	Δs	1Bbl.	Δc	1Bbl.	Δs
6'	3'	0.98	1.76	106	145	1.40	1.73	137	144	1.85	1.73	173	144	2.23	1.74	202	147	2.65	1.78	237	151
	4'	1.38	2.10	150	170	1.94	2.09	194	171	2.41	2.07	228	170	2.91	2.06	267	170	3.42	2.10	304	175
	5'	1.83	2.43	203	195	2.48	2.40	252	193	3.10	2.39	299	194	3.67	2.39	341	194	4.29	2.42	381	198
	6'	2.42	2.81	265	223	3.14	2.73	320	218	3.85	2.69	369	216	4.62	2.71	424	218	5.36	2.72	473	221
	7'	3.14	3.15	335	248	4.02	3.07	396	243	4.92	3.06	461	243	5.72	3.03	518	242	6.55	3.04	568	244
8'	3'	1.61	2.38	152	188	2.02	2.35	183	187	2.48	2.35	220	188	2.86	2.38	249	190	3.31	2.43	285	195
	4'	2.12	2.83	205	221	2.68	2.83	249	222	3.15	2.80	282	221	3.66	2.80	321	221	4.18	2.85	360	227
	5'	2.68	3.27	266	255	3.32	3.22	314	252	3.94	3.22	361	252	4.52	3.22	403	253	5.15	3.28	444	258
	6'	3.39	3.76	337	291	4.10	3.67	390	285	4.79	3.62	439	282	5.57	3.64	495	285	6.32	3.67	544	287
	7'	4.23	4.20	415	324	5.09	4.11	474	318	5.98	4.09	539	317	6.78	4.07	596	316	7.61	4.09	647	319
	8'	5.27	4.68	459	359	6.21	4.59	528	353	7.18	4.53	598	349	8.12	4.51	661	349	9.19	4.56	728	354
10'	3'	2.31	3.04	205	235	2.72	3.01	235	233	3.17	3.02	272	234	3.57	3.05	302	237	4.04	3.13	339	243
	4'	2.93	3.60	266	276	3.50	3.60	310	277	3.97	3.57	343	275	4.48	3.58	382	276	5.02	3.65	423	283
	5'	3.61	4.15	335	317	4.24	4.10	383	314	4.87	4.10	430	314	5.45	4.11	473	315	6.11	4.18	516	322
	6'	4.46	4.76	416	363	5.14	4.65	468	355	5.83	4.60	516	351	6.62	4.64	573	355	7.38	4.67	623	358
	7'	5.41	5.32	503	404	6.25	5.21	561	396	7.14	5.19	626	395	7.94	5.16	682	394	8.79	5.20	734	397
	8'	6.57	5.91	557	448	7.49	5.81	624	441	8.45	5.73	693	436	9.39	5.71	756	435	10.48	5.79	825	441
	9'	7.67	6.47	650	490	8.88	6.41	737	485	9.97	6.33	813	480	10.90	6.25	875	475	12.22	6.36	960	483
	10'	9.01	7.09	754	536	10.17	6.91	842	522	11.36	6.84	924	518	12.66	6.86	1009	520	13.96	6.90	1090	523
12'	8'	7.93	7.20	654	537	8.82	7.08	720	528	9.77	7.00	788	522	10.72	6.98	851	521	11.83	7.08	921	528

NOTATIONS:

Δc = Apron concrete quantity per additional barrel.

Δs = Apron steel quantity per additional barrel.

DESIGN APPROVED	ARIZONA DEPARTMENT OF TRANSPORTATION HIGHWAYS DIVISION STANDARD DRAWINGS	REVISION 7-88
APPROVED FOR DISTRIBUTION	OUTLET APRON DIMENSIONS & QUANTITIES 6 : 1 SLOPE	STANDARD NO. B-06.40

CADD FILENAME= ZFA
VIEW NAME=

DESIGN	DHY	8-72	NO.	DESCRIPTION OF REVISIONS	MADE BY	DATE
DRAWN	APJ	9-72	1	Curb height now 6"	JTW	7-76
CHECKED	NAB	9-72	2			
			3			

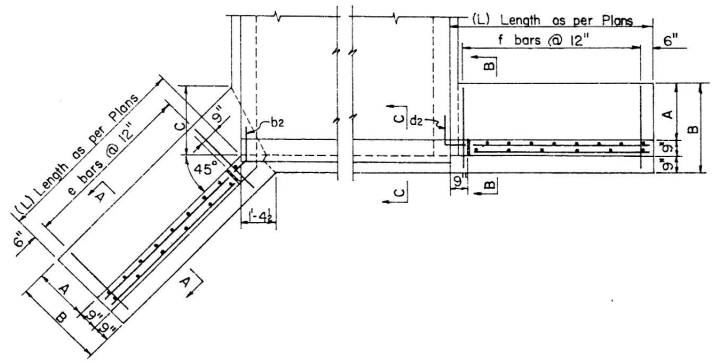

TYPE A WING

TYPE B WING

HEADWALL PLAN

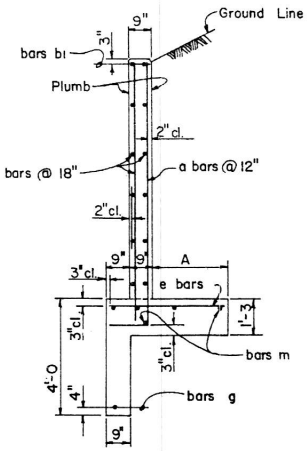

SECTION A-A

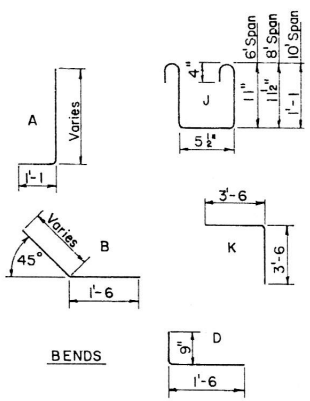

BENDS

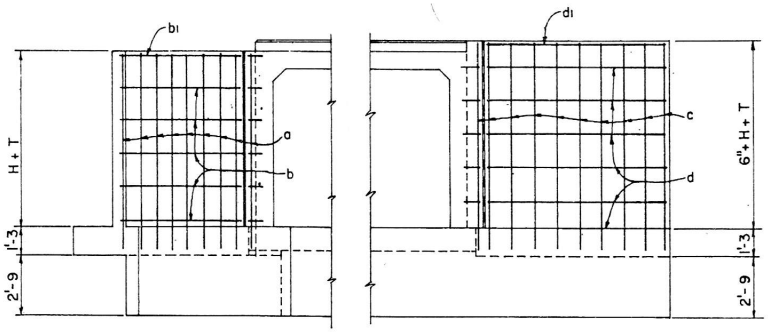

TYPE A WING

TYPE B WING

ELEVATION (Back Face Reinf.)

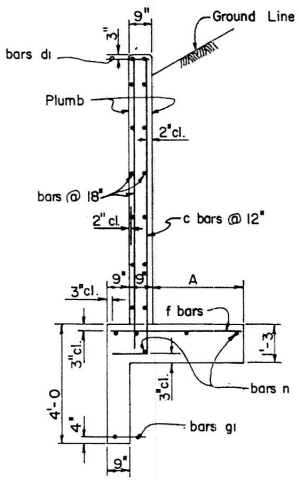

SECTION B-B

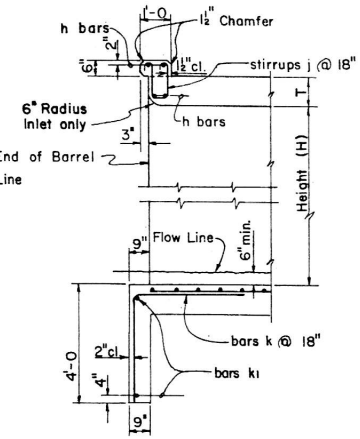

SECTION C-C

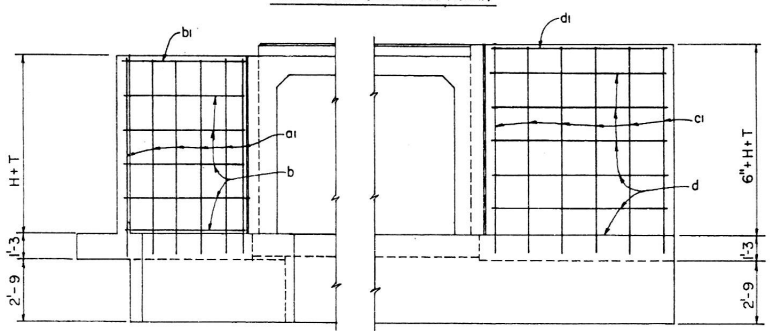

TYPE A WING

TYPE B WING

ELEVATION (Front Face Reinf.)

DIMENSIONS

Height of Opening	A	B	C
3'	1'-6	3'-0	1'-9
4'	2'-0	3'-6	2'-6
5'	2'-6	4'-0	3'-2
6'	3'-0	4'-6	3'-11
7'	3'-3	4'-9	4'-3

WINGS STEEL LIST (L = H + 2)

Mark	Bend	3' Height			4' Height			5' Height			6' Height			7' Height		
		No.	Size	Lgth.	No.	Size	Lgth.	No.	Size	Lgth.	No.	Size	Lgth.	No.	Size	Lgth.
TYPE A WING																
a	A	12	#5	5'-6	14	#5	6'-6	16	#5	7'-6	18	#6	8'-6	20	#7	9'-6
a1	str.	8	#4	4'-6	8	#4	5'-6	8	#4	6'-6	10	#4	7'-6	10	#4	8'-6
b	⌐	8	✓	4'-0	12	✓	5'-0	12	✓	6'-0	16	✓	7'-0	20	✓	8'-0
b1	⌐	4	#6	4'-0	4	#6	5'-0	4	#6	6'-0	4	#6	7'-0	4	#6	8'-0
b2	B	6	#4	2'-3	8	#4	2'-3	8	#4	2'-3	10	#4	2'-3	12	#4	2'-3
e	str.	12	#5	2'-6	14	#5	3'-0	16	#5	3'-6	18	#5	4'-0	20	#5	4'-3
g	B	2	#4	6'-9	2	#4	7'-9	2	#4	8'-9	2	#4	9'-9	2	#4	10'-9
m	str.	8	✓	5'-0	8	✓	6'-0	10	✓	7'-0	10	✓	8'-0	10	✓	9'-0
TYPE B WING																
c	A	12	#5	6'-0	14	#5	7'-0	16	#5	8'-0	18	#6	9'-0	20	#7	10'-0
c1	str.	8	#4	5'-0	8	#4	6'-0	8	#4	7'-0	10	#4	8'-0	10	#4	9'-0
d	⌐	8	✓	4'-0	12	✓	5'-0	12	✓	6'-0	16	✓	7'-0	20	✓	8'-0
d1	⌐	4	#6	4'-0	4	#6	5'-0	4	#6	6'-0	4	#6	7'-0	4	#6	8'-0
d2	D	6	#4	2'-3	8	#4	2'-3	8	#4	2'-3	10	#4	2'-3	12	#4	2'-3
f	str.	10	#5	2'-6	12	#5	3'-0	14	#5	3'-6	16	#5	4'-0	18	#5	4'-3
g1	⌐	2	#4	6'-3	2	#4	7'-3	2	#4	8'-3	2	#4	9'-3	2	#4	10'-3
n	⌐	8	✓	5'-0	8	✓	6'-0	10	✓	7'-0	10	✓	8'-0	10	✓	9'-0

CURB & CUT-OFF WALL STEEL LIST

Mark	Bend	Size	6' Spans					8' Spans					10' Spans				
			1 Barrel		○		◇	1 Barrel		○		◇	1 Barrel		○		◇
			No.	Lgth.	No.	Lgth.		No.	Lgth.	No.	Lgth.		No.	Lgth.	No.	Lgth.	
TYPE A WING																	
h	str.	#6	4	7'-0			6'-8	4	9'-0			8'-9	4	11'-3			10'-10
j	J	#4	6	3'-6	4			7	3'-6	6			8	3'-9	7		
k	K	✓	4	7'-0	4			5	7'-0	6			6	7'-0	7		
k1	str.	✓	2	4'-6			6'-8	2	6'-9			8'-9	2	9'-0			10'-10
TYPE B WING																	
h	str.	#6	4	7'-0			6'-8	4	9'-0			8'-9	4	11'-3			10'-10
j	J	#4	6	3'-6	4			7	3'-6	6			9	3'-9	7		
k	K	✓	5	7'-0	4			7	7'-0	6			9	7'-0	7		
k1	str.	✓	2	7'-3			6'-8	2	9'-3			8'-9	2	11'-6			10'-10

○ Additional number of bars per each extra barrel.

◇ Additional length of bars per each extra barrel.

APPROXIMATE HEADWALL QUANTITIES *

Span	Height	Hdwl. Type A Wings				Hdwl. Type B Wings			
		For L = H + 2'		Per each Add. Ft		For L = H + 2'		Per each Add. Ft.	
		Conc.	Steel	Conc.	Steel	Conc.	Steel	Conc.	Steel
6'	3'	4.18	297	.3146	19	4.32	308	.3310	20
	4'	5.52	375	.3655	23	5.60	382	.3819	23
	5'	7.07	456	.4164	25	7.07	467	.4329	26
	6'	8.86	636	.4673	33	8.75	652	.4838	34
	7'	10.58	864	.5067	41	10.43	886	.5231	43
8'	3'	4.47	319	.3157	19	4.61	336	.3322	20
	4'	5.80	397	.3666	23	5.88	409	.3831	23
	5'	7.35	477	.4176	25	7.37	494	.4340	26
	6'	9.14	658	.4685	33	9.04	679	.4849	34
	7'	10.88	886	.5090	41	10.75	913	.5255	43
10'	3'	4.81	344	.3180	19	4.94	368	.3345	20
	4'	6.13	423	.3640	23	6.21	441	.3854	23
	5'	7.66	503	.4210	25	7.69	527	.4375	26
	6'	9.46	683	.4731	33	9.39	712	.4896	34
	7'	11.19	911	.5125	41	11.09	946	.5290	43

* Includes curb and cut-off wall quantities for a single barrel.

CURB & CUT-OFF WALL QUANTITIES PER EACH ADDITIONAL BARREL

6' Spans		8' Spans		10' Spans	
Conc.	Steel	Conc.	Steel	Conc.	Steel
.859	76	1.114	103	1.370	130

NOTE:

See B-01.10 for general notes and miscellaneous details.

DESIGN APPROVED	ARIZONA DEPARTMENT OF TRANSPORTATION HIGHWAYS DIVISION STANDARD DRAWINGS	REVISION
R.C. Brechler		
APPROVED FOR DISTRIBUTION	INLET OR OUTLET LEVEL WINGS, HEIGHT 3' TO 7'	STANDARD NO.
		B-08.10

DESIGN	JEM	9-72	NO.	DESCRIPTION OF REVISIONS	MADE BY	DATE
DRAWN	CAG	11-72	1	Added haunch dimension note	JTW	7-76
CHECKED	JEM, HW	12-72	2	Chg. steel note & bar dim.	WEB	2-82
			3	Changed Reinf. Note	CH	10-86

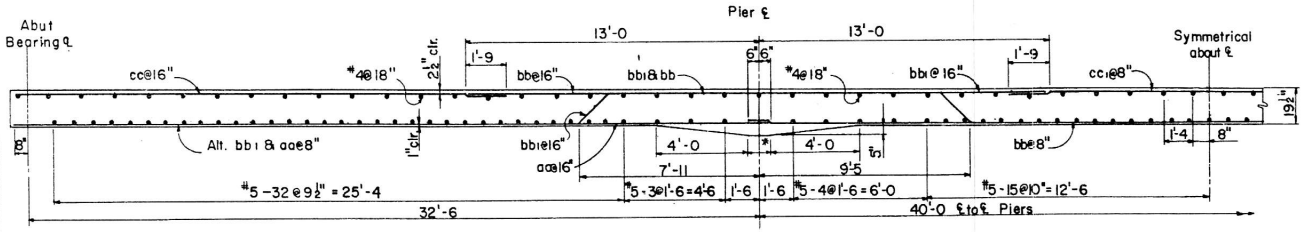

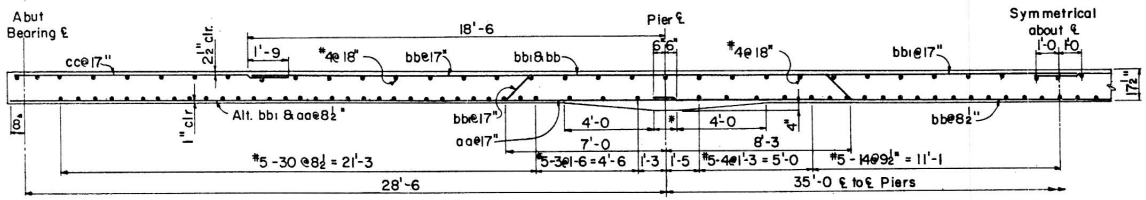

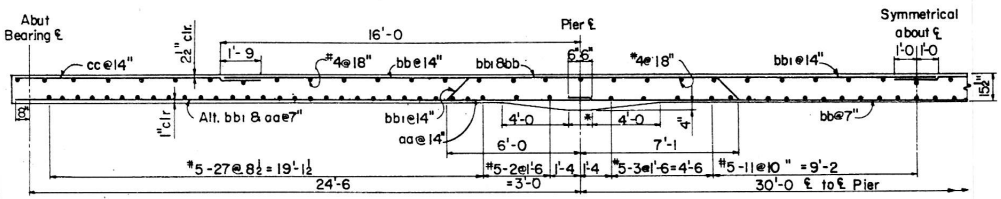

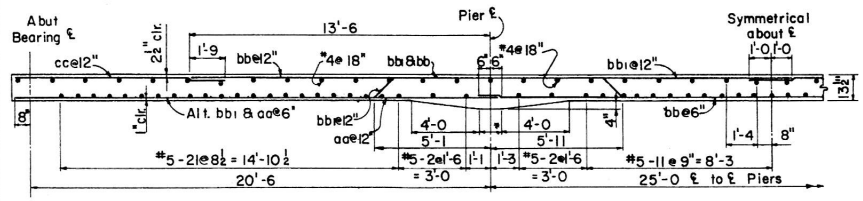

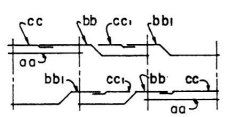

For 3 Spans

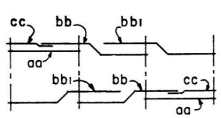

For 3 Spans

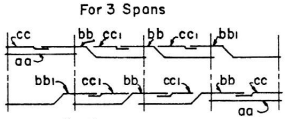

For 4 or more spans

SLAB STEEL PLACING DIAGRAM

For 32½ - 40 Span Length

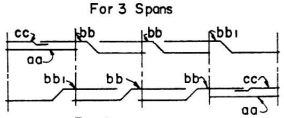

For 4 or more spans

SLAB STEEL PLACING DIAGRAM

For 28½ - 35, 24½ - 30, 20½ - 25 Span Lengths

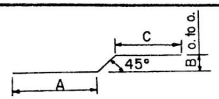

STEEL LIST

Span Lgths	Mark	Size	Bend	Lgth	Bend Dimensions A	B	C
40'-0, 32'-6	aa	10	str	33'-9			
	bb	10	⌒	54'-0	31'-1	1'-4	21'-2
	bb1	10	⌒	46'-9	25'-3	1'-4	19'-8
	cc	6	str	22'-0			
	cc1	4	str	17'-6			
35'-0, 28'-6	aa	10	str	29'-9			
	bb	10	⌒	54'-6	27'-3	1'-2	25'-8
	bb1	10	⌒	48'-3	22'-2	1'-2	24'-5
	cc	6	str	12'-6			
30'-0, 24'-6	aa	9	str	25'-9			
	bb	9	⌒	47'-0	23'-5	1'-0	22'-2
	bb1	9	⌒	41'-6	19'-2	1'-0	21'-1
	cc	6	str	11'-0			
25'-0, 20'-6	aa	8	str	21'-9			
	bb	8	⌒	39'-6	19'-7	10"	18'-8
	bb1	8	⌒	35'-0	16'-1	10"	17'-10
	cc	6	str	9'-6			

GENERAL NOTES:

See Project Drawings for cross section of deck slab, roadway width, curbs, railings, and foundations.

Minimum length of bridge shall be 3 spans. For additional length intermediate spans equal to the center span shall be added.

Construction - Standard Specifications Arizona Department of Transportation Edition of 1982, revised to date.

Design - A.A.S.H.O. Specifications for Highway Bridges 1973.

Dead Load - Dead Load includes allowance of 25 pounds per square foot for future wearing surface.

Loading Class - HS20-44 and/or Interstate Alternate Loading.

Load Distribution - E = 4.0 + .06S (S taken as effective end span length)

Stresses-
Class S concrete f'_c = 4,500 psi; f_c = 1,400 psi

Reinforcing steel shall conform to ASTM Spec. A615.
Bar sizes #6 and smaller shall be Gr. 40 or Gr. 60; f_s = 20000 psi
Bar sizes #7 and larger shall be Grade 60; f_s = 24000 psi

Curbs and/or sidewalk shall be poured to grade after falsework has been struck.

Dimensions shall not be scaled from drawings.

Haunch dimension normal to centerline of bent.

Forms shall be cambered for dead load deflection, vertical curvature, form deflection and falsework settlement. Camber figures given in plans are for dead load only.

DEAD LOAD CAMBER

L	L'	A	B	C	D	E	F	G
32'-6	40'-0	0"	1/4"	9/32"	1/8"	0"	1/8"	9/32"
28'-6	35'-0	0"	3/16"	7/32"	3/32"	0"	3/32"	3/16"
24'-6	30'-0	0"	1/8"	5/32"	1/16"	0"	3/32"	5/32"
20'-6	25'-0	0"	3/32"	3/32"	1/32"	0"	1/32"	3/32"

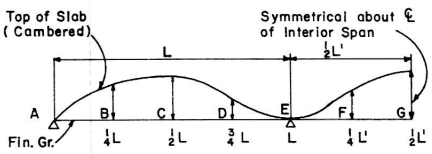

DEAD LOAD CAMBER DIAGRAM

NO SCALE

✱ Dimension varies. See Project Drawings for dimension and Special Pier Details.

DESIGN APPROVED	ARIZONA DEPARTMENT OF TRANSPORTATION HIGHWAYS DIVISION STANDARD DRAWINGS	REVISION
R.C. Brechler		10-86
APPROVED, FOR DISTRIBUTION	CONTINUOUS SPAN SLAB INTERSTATE LOADING	STANDARD NO.
F. Pleasler		B-09.30

DESIGN	WT, DHY	8-72	NO.	DESCRIPTION OF REVISIONS	MADE BY	DATE
DRAWN	KDM, APJ	9-72	1	Wing thickness & curb height	JTW	7-76
CHECKED	NAB, APJ	3-73	2			
			3			

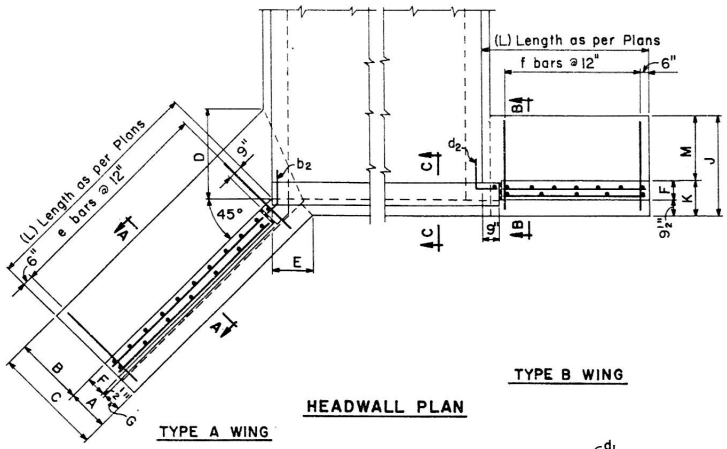

HEADWALL PLAN

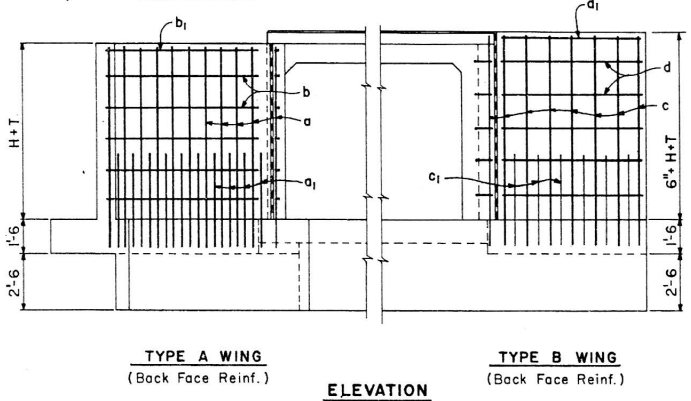

ELEVATION

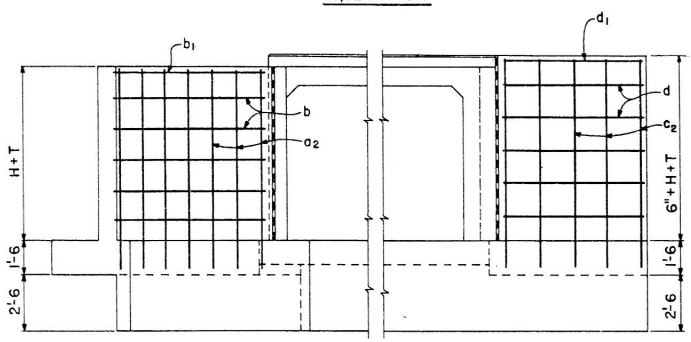

ELEVATION

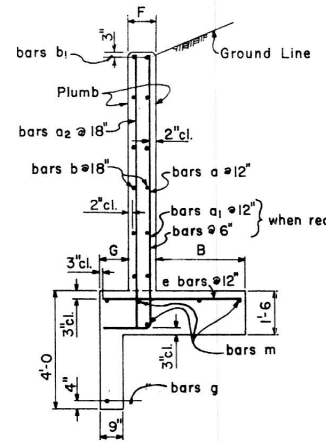

SECTION A-A

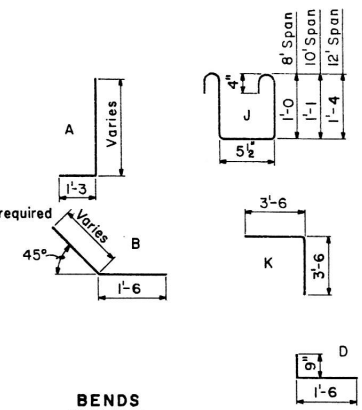

BENDS

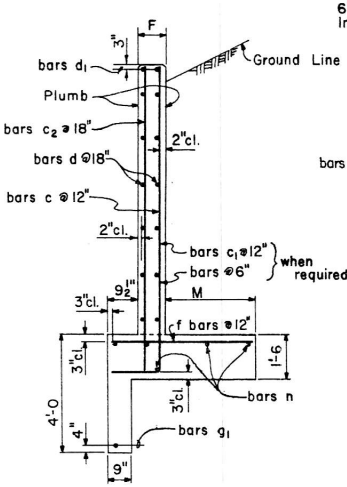

SECTION B-B

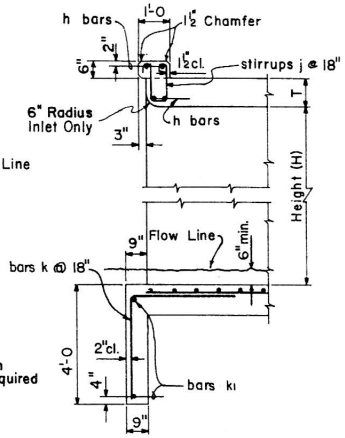

SECTION C-C

WINGS STEEL LIST (L=H+2')

Mark	Bend	8' Height			9' Height			10' Height			11' Height			12' Height		
		No.	Size	Lgth.	No.	Size	Lgth.	No.	Size	Lgth.	No.	Size	Lgth.	No.	Size	Lgth.
TYPE A WING																
a	A	20	#7	11'-0	22	#8	12'-3	24	#6	13'-3	26	#7	14'-3	28	#7	15'-3
a_1	A							24	#6	6'-6	26	#7	6'-9	28	#7	7'-0
a_2	str.	14	#4	9'-9	14	#4	11'-0	16	#4	12'-0	18	#4	13'-0	18	#4	14'-0
b	✓	20	#4	9'-0	24	#4	10'-0	28	#4	11'-0	28	#4	12'-0	32	#4	13'-0
b_1	✓	4	#6	9'-0	4	#6	10'-0	4	#6	11'-0	4	#6	12'-0	4	#6	13'-0
b_2	B	12	#4	2'-3	14	#4	2'-3	16	#4	2'-3	16	#4	2'-3	18	#4	2'-3
e	str.	20	#5	5'-0	22	#6	5'-6	24	#7	6'-0	26	#7	6'-6	28	#8	6'-9
g	B	2	#4	12'-3	2	#4	13'-9	2	#4	14'-9	2	#4	16'-0	2	#4	17-0
m	str.	10	#4	9'-6	10	#4	10'-6	10	#4	11'-6	10	#4	12'-6	10	#4	13'-6
TYPE B WING																
c	A	20	#7	11'-6	22	#8	12'-9	24	#6	13'-9	26	#7	14'-9	28	#7	15'-9
c_1	✓							24	#6	6'-6	26	#7	6'-9	28	#7	7'-0
c_2	str.	14	#4	10'-3	14	#4	11'-6	16	#4	12'-6	18	#4	13'-6	18	#4	14'-6
d	✓	24	#4	9'-0	28	#4	10'-0	28	#4	11'-0	32	#4	12'-0	36	#4	13'-0
d_1	✓	4	#6	9'-0	4	#6	10'-0	4	#6	11'-0	4	#6	12'-0	4	#6	13'-0
d_2	D	14	#4	2'-3	16	#4	2'-3	16	#4	2'-3	18	#4	2'-3	20	#4	2'-3
f	str.	20	#5	5'-0	22	#6	5'-6	24	#7	6'-0	26	#7	6'-6	28	#9	7'-6
g_1	✓	2	#4	11'-3	2	#4	12'-3	2	#4	13'-3	2	#4	14'-3	2	#4	15'-3
n	✓	10	#4	9'-6	10	#4	10'-6	10	#4	11'-6	10	#4	12'-6	10	#4	13'-6

CURB & CUT-OFF WALL STEEL LIST

Mark	Bend	Size	8' Spans				10' Spans				12' Spans			
			I Barrel		○	◇	I Barrel		○	◇	I Barrel		○	◇
			No.	Lgth.	No.	Lgth.	No.	Lgth.	No.	Lgth.	No.	Lgth.	No.	Lgth.
TYPE A WING														
h	str.	#6	4	9'-0		8'-9	4	11'-3		10'-10	4	13'-6		13'-0
j	J	#4	7	3'-6	5		8	3'-9	7		9	4'-3	8	
k	K	✓	4	7'-0	6		6	7'-0	7		7	7'-0	8	
k_1	str.	✓	2	5'-9		8'-9	2	7'-6		10'-10	2	8'-3		13'-0
TYPE B WING														
h	str.	#6	4	10'-6		8'-9	4	12'-9		10'-10	4	15'-0		13'-0
j	J	#4	7	3'-6	6		9	3'-9	7		10	4'-3	8	
k	K	✓	7	7'-0	6		9	7'-0	7		10	7'-0	8	
k_1	str.	✓	2	9'-6		8'-9	2	11'-6		10'-10	2	13'-6		13'-0

○ Additional number of bars per. ea. extra barrel.
◇ Additional length of bars per. ea. extra barrel.

CURB & CUT-OFF WALL QUANTITIES PER EACH ADDITIONAL BARREL

8' Spans		10' Spans		12' Spans	
Conc.	Steel	Conc.	Steel	Conc.	Steel
1.114	103	1.370	130	1.625	155

APPROXIMATE HEADWALL QUANTITIES *

Span	Height	Hdwl. Type A Wings				Hdwl. Type B Wings			
		For L=H+2'		Per each Add. Ft.		For L=H+2'		Per each Add. Ft.	
		Conc.	Steel	Conc.	Steel	Conc.	Steel	Conc.	Steel
8'	8'	15.07	1017	.682	46	15.05	1095	.703	49
10'	8'	15.44	1045	.690	46	15.41	1128	.707	49
	9'	18.30	1462	.753	61	18.18	1556	.771	63
	10'	21.49	1655	.817	64	21.20	1708	.835	65
12'	8'	15.78	1071	.696	46	15.80	1155	.714	49
	9'	18.67	1488	.759	61	18.59	1582	.777	63
	10'	21.86	1680	.822	64	21.61	1734	.840	65
	11'	25.95	2197	.663	78	25.61	2295	.922	81
	12'	30.03	2596	1.015	87	30.86	2908	1.035	98

* Includes curb and cut-off wall quantities for a single barrel.

NOTE:
See B-01.10 for general notes and miscellaneous details.

DIMENSIONS

Height of Opening	A	B	C	D	E	F	G	J	K	M
8'	1'-9	3'-9	5'-6	5'-0	1'-8¾	11½	0'-9	5'-6	1'-9	3'-9
9'	2'-0	4'-0	6'-0	5'-4	2'-1	11½	1'-0	6'-0	1'-9	4'-3
10'	2'-0	4'-6	6'-6	6'-0	2'-1	11½	1'-0	6'-6	1'-9	4'-9
11'	2'-4	4'-8	7'-0	6'-3	2'-6¾	1'-0½	1'-3	7'-0	1'-10	5'-2
12'	2'-6	4'-9	7'-3	6'-5	2'-9⅝	1'-1½	1'-4	8'-0	1'-11	6'-1

DESIGN APPROVED	ARIZONA DEPARTMENT OF TRANSPORTATION HIGHWAYS DIVISION STANDARD DRAWINGS	REVISION
APPROVED FOR DISTRIBUTION	INLET OR OUTLET LEVEL WINGS, HEIGHT 8' TO 12'	STANDARD NO. B-08.20

DESIGN	JEM	9-72	NO.	DESCRIPTION OF REVISIONS	MADE BY	DATE
DRAWN	CAG	11-72	1	Added haunch dimension note	JTW	7-76
CHECKED	JEM, HW	12-72	2	Change notes & clearances	WEB	2-82
			3	Change Reinf. Note	CH	10-86

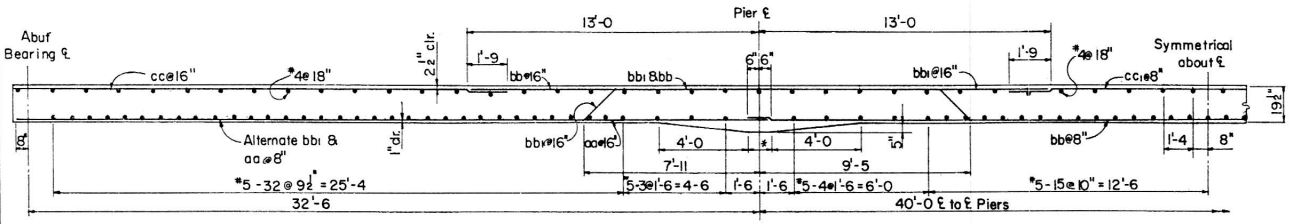

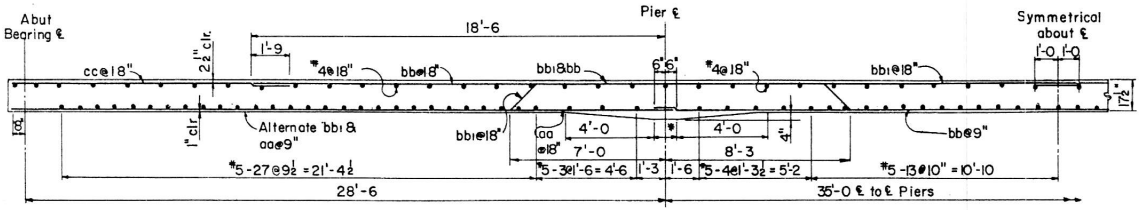

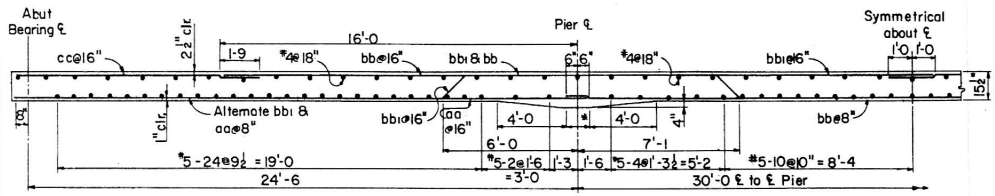

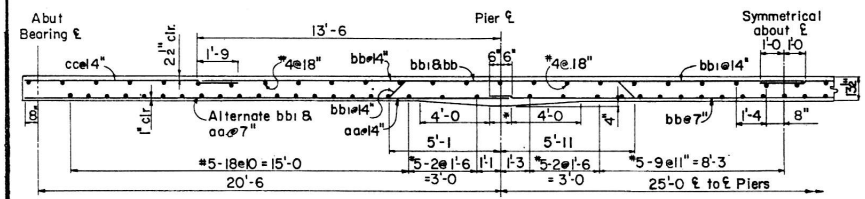

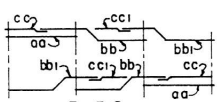

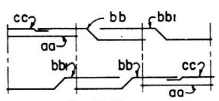

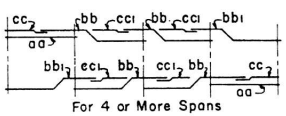

SLAB STEEL PLACING DIAGRAM
For 32½-40 Span Length

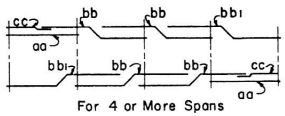

SLAB STEEL PLACING DIAGRAM
For 28½-35, 24½-30 & 20½-25 Span Lengths

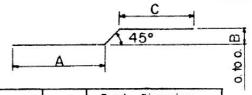

STEEL LIST

Span Lgths	Mark	Size	Bend	Lgth	Bend Dimensions A	B	C
32'-6, 40'-0	aa	10	str	33'-9			
	bb	10		54'-0	31'-1	1'-4	21'-2
	bb1	10		46'-9	25'-3	1'-4	19'-8
	cc	6	str	22'-0			
	cc1	4	str	17'-6			
28'-6, 35'-0	aa	10	str	29'-9			
	bb	10		54'-6	27'-3	1'-2	25'-8
	bb1	10		48'-3	22'-2	1'-2	24'-5
	cc	6	str	12'-6			
24'-6, 30'-0	aa	9	str	25'-9			
	bb	9		47'-0	23'-5	1'-0	22'-2
	bb1	9		41'-6	19'-2	1'-0	21'-1
	cc	6	str	11'-0			
20'-6, 25'-0	aa	8	str	21'-9			
	bb	8		39'-6	19'-7	10"	18'-8
	bb1	8		35'-0	16'-1	10"	17'-10
	cc	6	str	9'-6			

GENERAL NOTES:

See Project Drawings for cross section of deck slab, roadway width, curbs, railings, and foundations.
Minimum length of bridge shall be 3 spans. For additional length intermediate spans equal to the center span shall be added.
Construction - Standard Specifications Ariz. Dept. of Transportation Edition of 1982, revised to date.
Design - A.A.S.H.O. Specifications for Highway Bridges 1973.

Dead Load - Dead Load includes allowance of 25 pounds per square foot for future wearing surface.
Loading Class - HS20-44
Load Distribution - E = 4.0 + .06S (S taken as effective end span length)
Stresses -
Class S concrete $f'_c = 4{,}500$ psi; $f_c = 1{,}400$ psi
Reinforcing steel shall conform to ASTM Spec. A615.
Bar sizes #6 and smaller shall be Gr. 40 or Gr. 60; $f_s = 20000$ psi
Bar sizes #7 and larger shall be Grade 60; $f_s = 24000$ psi

Curbs and/or sidewalk shall be poured to grade after falsework has been struck.
Dimensions shall not be scaled from drawings.
Haunch dimension normal to centerline of bent.
Forms shall be cambered for dead load deflection, vertical curvature, form deflection and falsework settlement. Camber figures given in plans are for dead load only.

DEAD LOAD CAMBER

L	L'	A	B	C	D	E	F	G
32'-6	40'-0	0"	1/4"	9/32"	1/8"	0"	1/8"	9/32"
28'-6	35'-0	0"	3/16"	7/32"	3/32"	0"	3/32"	3/16"
24'-6	30'-0	0"	1/8"	5/32"	1/16"	0"	3/32"	5/32"
20'-6	25'-0	0"	3/32"	3/32"	1/32"	0"	1/32"	3/32"

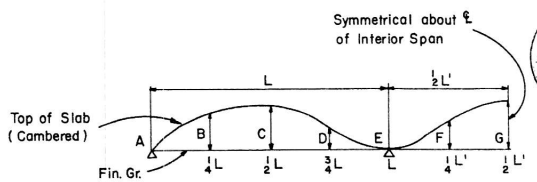

DEAD LOAD CAMBER DIAGRAM
NO SCALE

*Dimension varies. See Project Drawings for dimension and Special Pier Details.

DESIGN APPROVED	ARIZONA DEPARTMENT OF TRANSPORTATION HIGHWAYS DIVISION STANDARD DRAWINGS	REVISION
K. C. Buchler		10-86
APPROVED FOR DISTRIBUTION	CONTINUOUS SPAN SLAB HS20-44 LOADING	STANDARD NO.
E. R. Smalley		B-09.10

DESIGN	JEM	10-72	NO.	DESCRIPTION OF REVISIONS	MADE BY	DATE
DRAWN	CAG	11-72	①	Changed haunch dimension	JTW	7-76
CHECKED	JEM, HW	12-72	②	Changed hinge	JEM	2-85
			③			

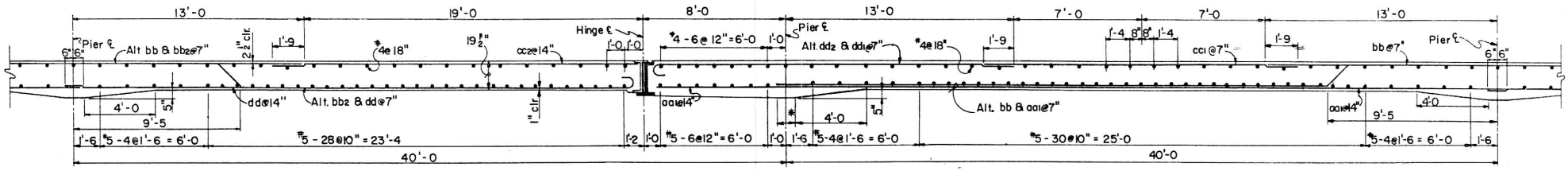

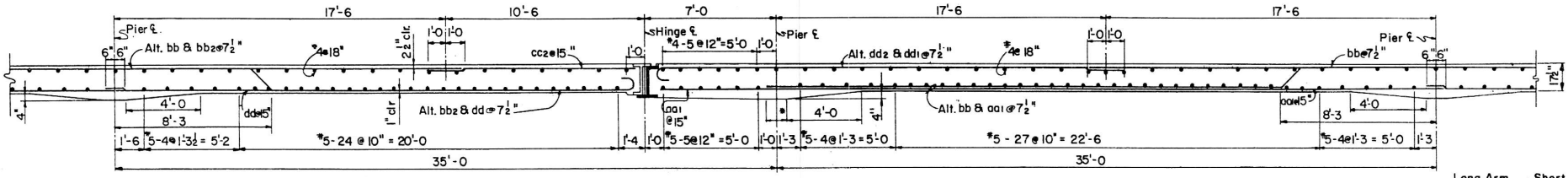

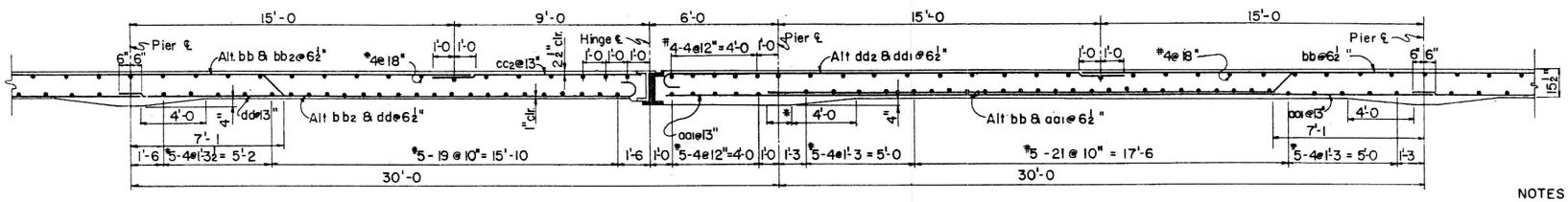

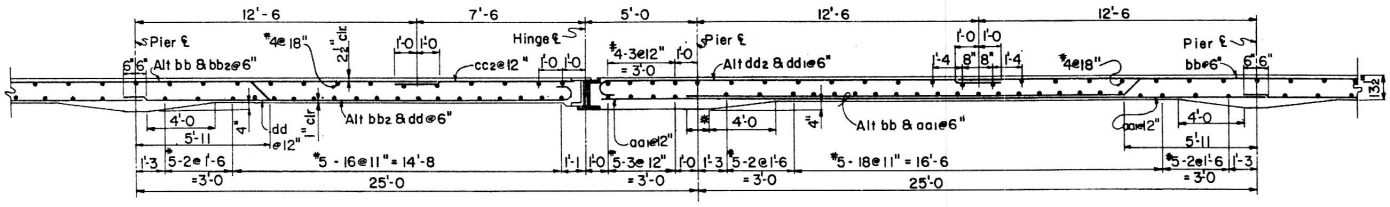

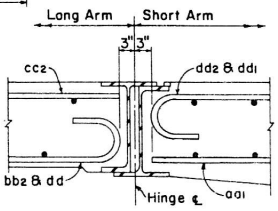

SECTION THROUGH JOINT

NOTES:

Refer to B-09.10 and Project Drawings for General Notes.

Refer to B-10.10 for steel list, bar placing diagrams and hinge details.

NOTE
The contractor shall excercise caution when installing hinge assembly. Reversed hinge installation will not provide required structural support for suspended arm.

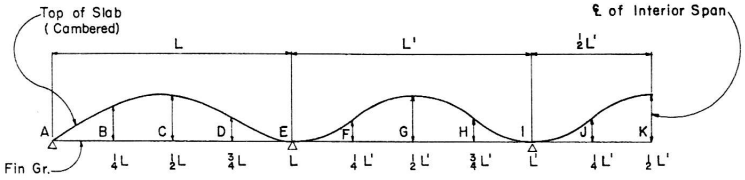

DEAD LOAD CAMBER DIAGRAM
NO SCALE

DEAD LOAD CAMBER

L	L'	A	B	C	D	E	F	G	H	I	J	K
32'-6	40'-0	0"	1/4"	9/32"	1/8"	0"	1/8"	9/32"	1/8"	0"	1/8"	9/32"
28'-6	35'-0	0"	3/16"	7/32"	3/32"	0"	3/32"	3/16"	3/32"	0"	3/32"	3/16"
24'-6	30'-0	0"	1/8"	5/32"	1/16"	0"	3/32"	5/32"	3/32"	0"	3/32"	5/32"
20'-6	25'-0	0"	3/32"	3/32"	1/32"	0"	1/32"	3/32"	1/32"	0"	1/32"	3/32"

Camber hinge span as per interior spans.

*Dimension varies. See Project Drawings for dimension and Special Pier Details.

DESIGN APPROVED	ARIZONA DEPARTMENT OF TRANSPORTATION HIGHWAYS DIVISION STANDARD DRAWINGS	REVISION 8/85
APPROVED FOR DISTRIBUTION	CONTINUOUS SPAN SLAB WITH HINGE HS20-44 LOADING	STANDARD NO. B-09.20

DESIGN	JEM	10-72	NO	DESCRIPTION OF REVISIONS	MADE BY	DATE
DRAWN	CAG	11-72	1	Changed haunch dimension	JTW	7-76
CHECKED	JEM, HW	12-72	2	Changed hinge	JEM	2-85
			3			

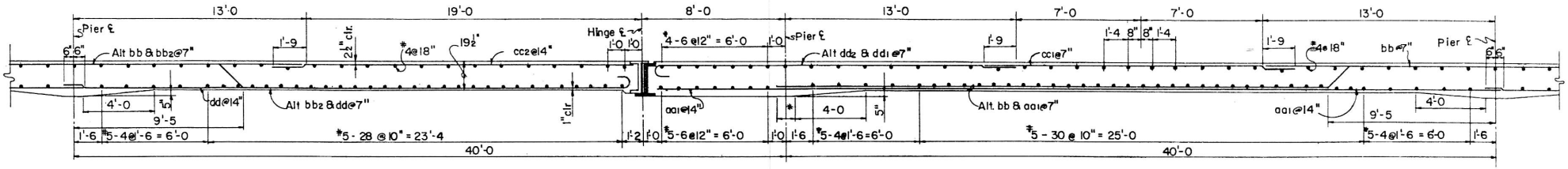

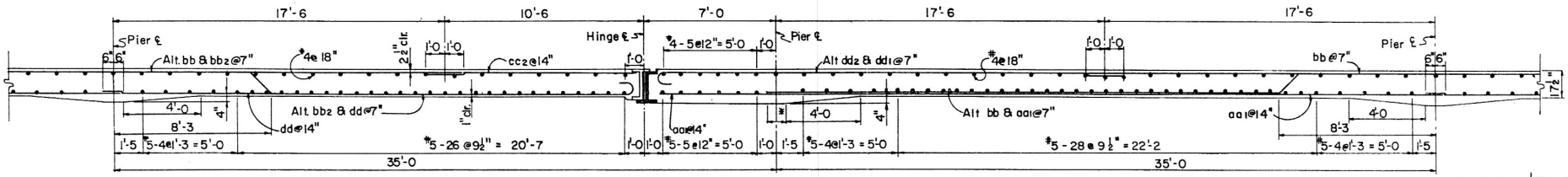

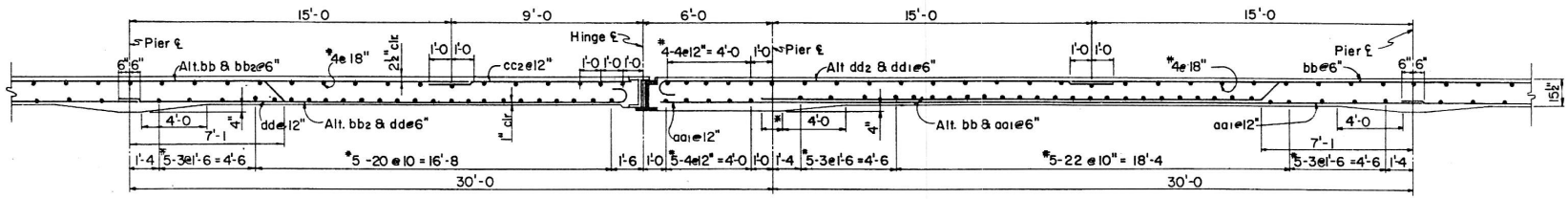

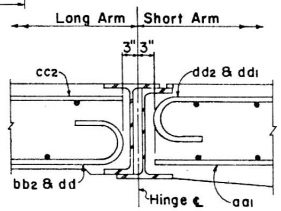

SECTION THROUGH JOINT

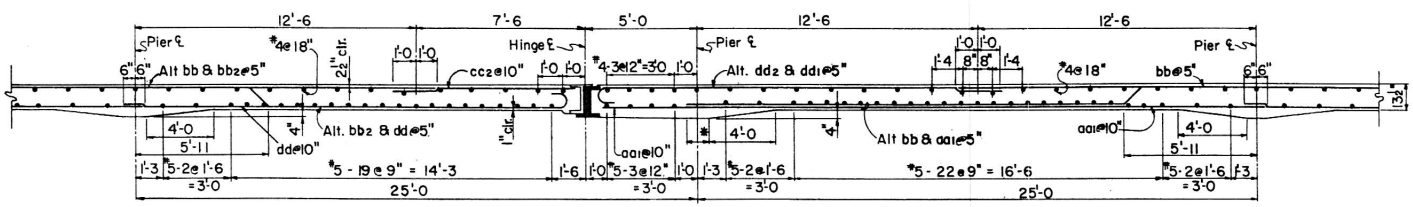

NOTES:

Refer to B-09.30 and Project Drawings for General Notes.
Refer to B-10.10 for steel list, bar placing diagram and hinge details.

NOTE

The contractor shall excercise caution when installing hinge assembly. Reversed hinge installation will not provide required structural support for suspended arm.

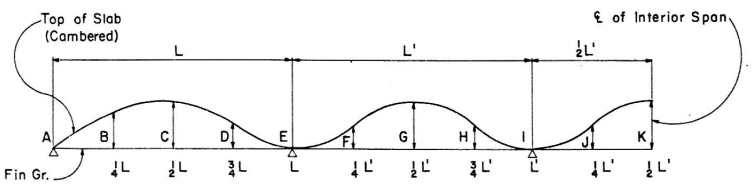

DEAD LOAD CAMBER DIAGRAM

NO SCALE

DEAD LOAD CAMBER

L	L'	A	B	C	D	E	F	G	H	I	J	K
32'-6	40'-0	0"	1/4"	9/32"	1/8"	0"	1/8"	9/32"	1/8"	0"	1/8"	9/32"
28'-6	35'-0	0"	5/16"	7/32"	3/32"	0"	3/32"	3/16"	3/32"	0"	3/32"	3/16"
24'-6	30'-0	0"	3/8"	5/32"	1/16"	0"	3/32"	3/32"	3/32"	0"	3/32"	3/32"
20'-6	25'-0	0"	7/32"	3/32"	1/32"	0"	1/32"	1/32"	1/32"	0"	1/32"	1/32"

Camber hinge span as per interior spans

*Dimension varies. See Project Drawings for dimension and Special Pier Details.

DESIGN APPROVED	ARIZONA DEPARTMENT OF TRANSPORTATION HIGHWAYS DIVISION STANDARD DRAWINGS	REVISION 8/85
APPROVED FOR DISTRIBUTION	CONTINUOUS SPAN SLAB WITH HINGE, INTERSTATE LOADING	STANDARD NO B-09.40

DESIGN	JEM	10-72	NO.	DESCRIPTION OF REVISIONS	MADE BY	DATE	NO	DESCRIPTION OF REVISIONS	MADE BY	DATE
DRAWN	CAG	11-72	①	Joint note added	SEA	11-74	④	Change notes & bar dim.	WEB	8-82
CHECKED	JEM, HW	12-72	②	Reinf. Note changed & W Shapes	C.H.	8-80	⑤	Changed hinge sect, hinge restrainer & bar lgths	JEM	2-85
			③	Change W18X97 to W14X99	WB	5-81	⑥	Revised Paint Note.	CH	10-86

INTERSTATE OR HS20-44*

Span Lgth	Mark	Size	Bend	Lgth	Bend Dimensions A	B	C	D	E
40'-0	aa1	10	str	48'-3					
	bb	10	2	54'-0	31'-1	1'-4	21'-2		
	bb2	10	1	46'-4	22'-4	1'-4	21'-2	1'-0 3/4	11 1/2"
	cc1	4	str	17'-6					
	cc2	6	str	20'-6					
	dd	10	3	33'-4	32'-3	9"	9 1/2"		
	dd1	10	3	21'-11	20'-9	9"	9 1/2"		
	dd2	10	3	21'-11	20'-9	9"	9 1/2"		
35'-0	aa1	10	str	42'-3					
	bb	10	2	54'-6	27'-3	1'-2	25'-8		
	bb2	10	1	47'-10	19'-6	1'-2	25'-8	1'-0 3/4	11 1/2"
	cc2	6	str	11'-3					
	dd	10	3	29'-4	28'-3	9"	9 1/2"		
	dd1	10	3	32'-8	31'-7	9"	9 1/2"		
	dd2	10	3	26'-5	25'-3	9"	9 1/2"		
30'-0	aa1	9	str	36'-3					
	bb	9	2	47'-0	23'-5	1'-0	22'-2		
	bb2	9	1	41'-1	16'-8	1'-0	22'-2	11 1/2"	10"
	cc2	6	str	9'-9					
	dd	9	3	25'-4	24'-3	8"	8 1/2"		
	dd1	9	3	27'-8	26'-7	8"	8 1/2"		
	dd2	9	3	22'-8	21'-9	8"	8 1/2"		
25'-0	aa1	8	str	30'-3					
	bb	8	2	39'-6	19'-7	10"	18'-8		
	bb2	8	1	34'-7	13'-10	10"	18'-8	8"	8"
	cc2	6	str	8'-3					
	dd	8	3	21'-1	20-3	7"	7 1/2"		
	dd1	8	3	22'-5	21'-7	7"	7 1/2"		
	dd2	8	3	19'-2	18'-3	7"	7 1/2"		

* Bar sizes and bend dimensions are the same for both Interstate and HS20-44 slabs. Bar spacing varies for the two cases. See B-09.20 and B-09.40 for details.

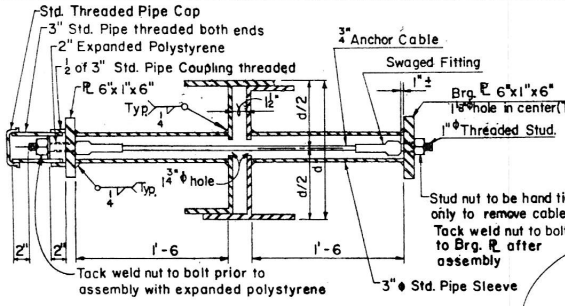

SECTION THRU HINGE RESTRAINER

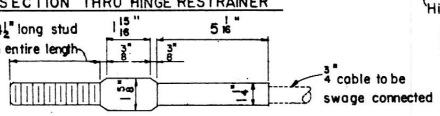

SWAGED FITTING AND STUD DETAIL

NOTE:

Anchor cable shall be 6x19 classification, galvanized, with a minimum breaking strength of 21.4 tons.

Swaged fitting and stud assembly shall conform to the requirements of American Iron and Steel Institute 1035 and shall develop the breaking strength of the cable.

Expanded polystyrene shall be shipped loose and assembled after hinge joint is erected.

HINGE RESTRAINER DETAILS

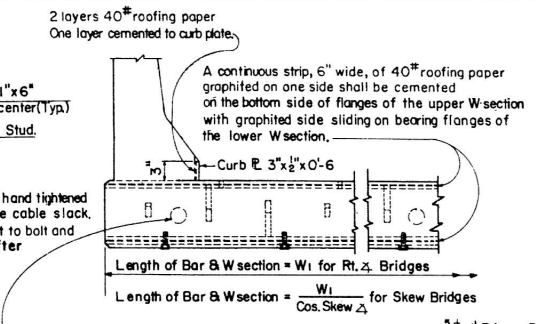

Hinge restrainer @ 4'-0 ctrs.

SECTION D-D

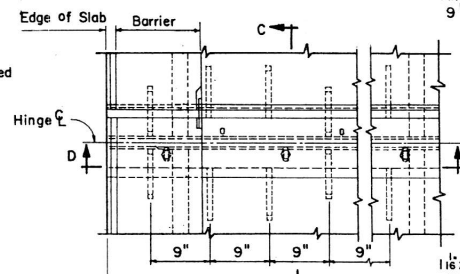

PLAN

Right Angle Bridge

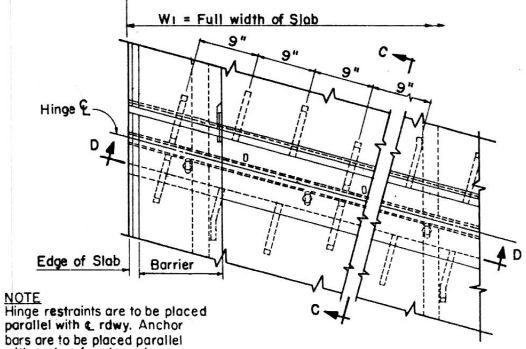

NOTE

Hinge restraints are to be placed parallel with ℄ rdwy. Anchor bars are to be placed parallel with ℄ rdwy. for skews in excess of 10°

PLAN

Skew Bridge

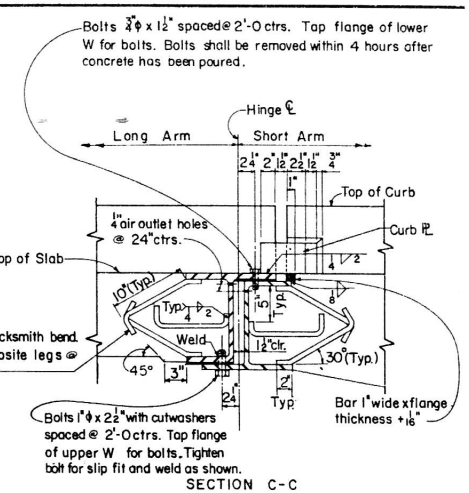

SECTION C-C

NOTES: W sections see table below

Burn off one half flange of each section flush with web face.

Bearing faces of flanges shall be ground smooth after drilling and tapping.

W sections shall have parallel flange faces.

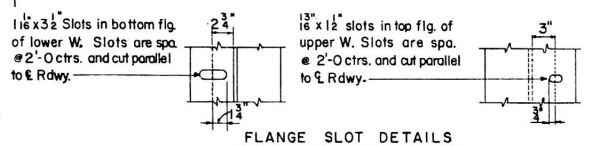

FLANGE SLOT DETAILS

NOTES:

Structural steel shall conform to ASTM Spec. A36.

Paint and painting shall conform to Standard Specifications. Contact surfaces shall not be painted.

Slab Hinge Joint shall be shop assembled, shipped and erected as a unit. Unit shall be shop fabricated to conform to the roadway section as noted on deck details.

Joint shall be continuous for lengths 40 feet or less. For lengths over 40 feet the joint may be two pieces butted together, without welded splicing, at the roadway crown or construction centerline.

Butted ends shall meet smoothly on the roadway surface after installation or they shall be ground smooth.

Reinforcing steel shall conform to ASTM Spec. A615

Bar sizes #6 and smaller shall be Gr. 40 or Gr. 60; f_s=20000psi

Bar sizes #7 and larger shall be Grade 60; f_s=24000psi

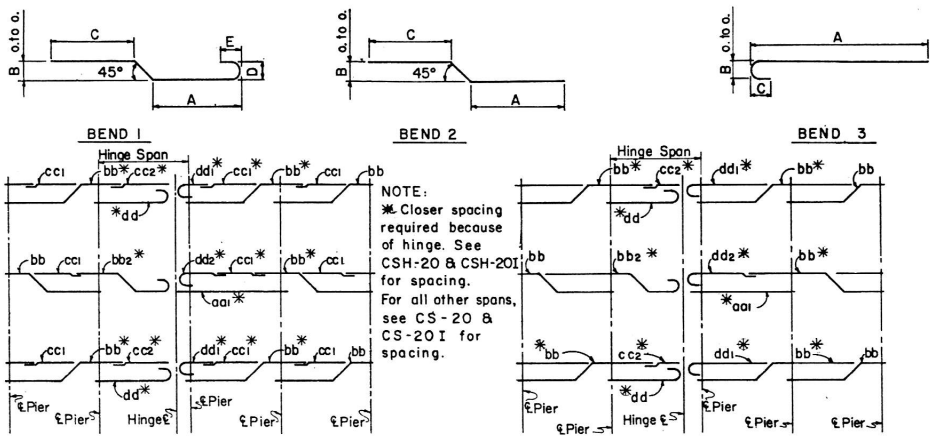

NOTE:

* Closer spacing required because of hinge. See CSH-20 & CSH-20I for spacing.

For all other spans, see CS-20 & CS-20I for spacing.

For 40' Span Lengths

For 35', 30' & 25' Span Lengths

STEEL PLACING DIAGRAM FOR HINGE SPAN & ADJACENT SPANS

TABLE OF W SECTIONS FOR VARIOUS SLAB THICKNESSES

Slab Thickness	W Section
19 1/2"	W 21x111
17 1/2"	W 18x97
15 1/2"	W 16x77
13 1/2"	W 14x90

DESIGN APPROVED	ARIZONA DEPARTMENT OF TRANSPORTATION HIGHWAYS DIVISION STANDARD DRAWINGS	REVISION
R.C. Buchler		10-86
APPROVED FOR DISTRIBUTION	SLAB HINGE JOINT AND HINGE SPAN REINFORCING DETAILS	STANDARD NO. B-10.10

DESIGN			NO.	DESCRIPTION OF REVISIONS	MADE BY	DATE	NO	DESCRIPTION OF REVISIONS	MADE BY	DATE
DRAWN	WEB	12-82	1	Changed hinge sect., hinge restrainer & bar lgths	JEM	2-85	4			
CHECKED	NJB	12-82	2	Revised Paint Note	CH	10-86	5			
			3				6			

INTERSTATE OR HS20-44*

Span Lgth	Mark	Size	Bend	Lgth	Bend Dimensions A	B	C	D	E
40'-0	aa1	10	str	48'-3					
	bb	10	2	54'-0	31'-1	1'-4	21'-2		
	bb2	10	1	46'-4	22'-4	1'-4	21'-2	1'-0¾	11½"
	cc1	4	str	17'-6					
	cc2	6	str	20'-6					
	dd	10	3	33'-4	32'-3	9"	9½"		
	dd1	10	3	21'-11	20'-9	9"	9½"		
	dd2	10	3	21'-11	20'-9	9"	9½"		
35'-0	aa1	10	str	42'-3					
	bb	10	2	54'-6	27'-3	1'-2	25'-8		
	bb2	10	1	47'-10	19'-6	1'-2	25'-8	1'-0¾	11½"
	cc2	6	str	11'-3					
	dd	10	3	29'-4	28'-3	9"	9½"		
	dd1	10	3	32'-8	31'-7	9"	9½"		
	dd2	10	3	26'-5	25'-3	9"	9½"		
30'-0	aa1	9	str	36'-3					
	bb	9	2	47'-0	23'-5	1'-0	22'-2		
	bb2	9	1	41'-1	16'-8	1'-0	22'-2	11½"	10"
	cc2	6	str	9'-9					
	dd	9	3	25'-4	24'-3	8"	8½"		
	dd1	9	3	27'-8	26'-7	8"	8½"		
	dd2	9	3	22'-8	21'-9	8"	8½"		
25'-0	aa1	8	str	30'-3					
	bb	8	2	39'-6	19'-7	10"	18'-8		
	bb2	8	1	34'-7	13'-10	10"	18'-8	8"	8"
	cc2	6	str	8'-3					
	dd	8	3	21'-1	20'-3	7"	7½"		
	dd1	8	3	22'-5	21'-7	7"	7½"		
	dd2	8	3	19'-2	18'-3	7"	7½"		

* Bar sizes and bend dimensions are the **same** for both Interstate and HS20-44 slabs. Bar spacing varies for the two cases. See B-09.20 and B-09.40 for details.

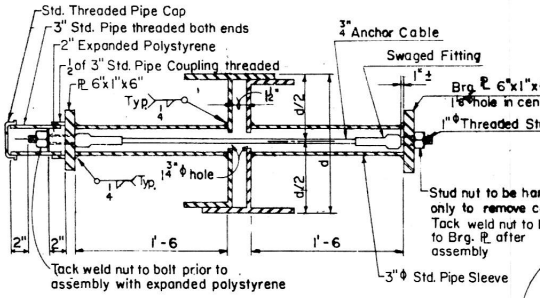

SECTION THRU HINGE RESTRAINER

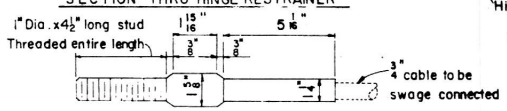

SWAGED FITTING AND STUD DETAIL

NOTE:

Anchor cable shall be 6 x 19 classification, galvanized, with a minimum breaking strength of 21.4 tons.

Swaged fitting and stud assembly shall conform to the requirements of American Iron and Steel Institute 1035 and shall develop the breaking strength of the cable.

Expanded polystyrene shall be shipped loose and assembled after hinge joint is erected.

HINGE RESTRAINER DETAILS

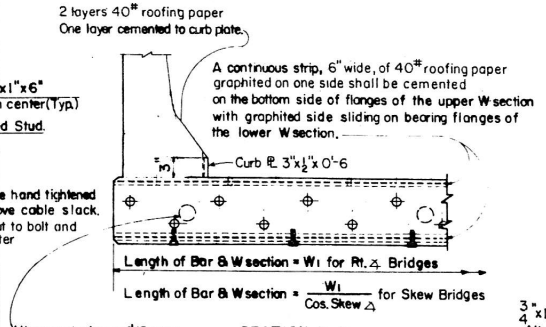

SECTION D-D

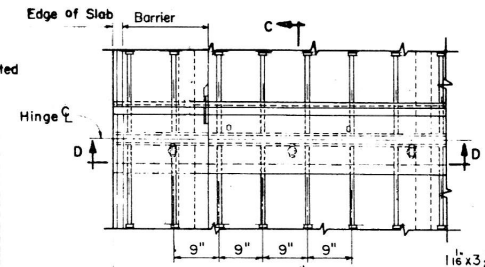

PLAN

Right Angle Bridge

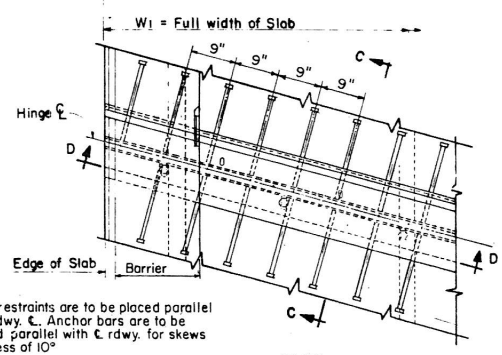

NOTE

Hinge restraints are to be placed parallel with rdwy. ℄. Anchor bars are to be placed parallel with ℄ rdwy. for skews in excess of 10°

PLAN

Skew Bridge

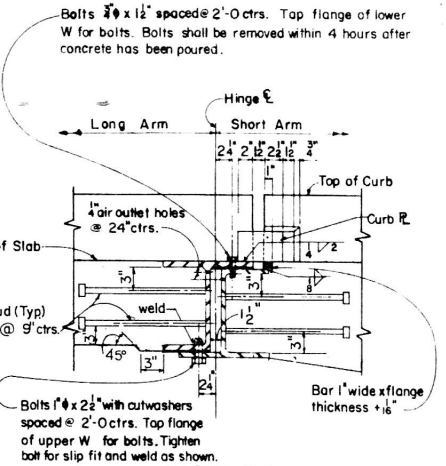

SECTION C-C

NOTES: W sections see table below

Burn off one half flange of each section flush with web face.

Bearing faces of flanges shall be ground smooth after drilling and tapping.

W sections shall have parallel flange faces.

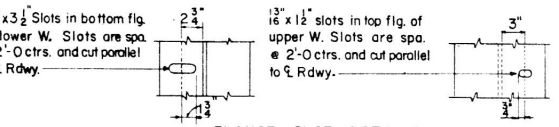

FLANGE SLOT DETAILS

NOTES:

Structural steel shall conform to ASTM Spec. A36.

Paint and painting shall conform to Standard Specifications. Contact surfaces shall not be painted.

Slab Hinge Joint shall be shop assembled, shipped and erected as a unit. Unit shall be shop fabricated to conform to the roadway section as noted on deck details.

Joint shall be continuous for lengths 40 feet or less. For lengths over 40 feet the joint may be two pieces butted together, without welded splicing, at the roadway crown or construction centerline.

Butted ends shall meet smoothly on the roadway surface after installation or they shall be ground smooth.

Reinforcing steel shall conform to ASTM Spec. A615

Bar sizes #6 and smaller shall be Gr. 40 or Gr. 60; f_s = 20000 psi

Bar sizes #7 and larger shall be Grade 60; f_s = 24000 psi

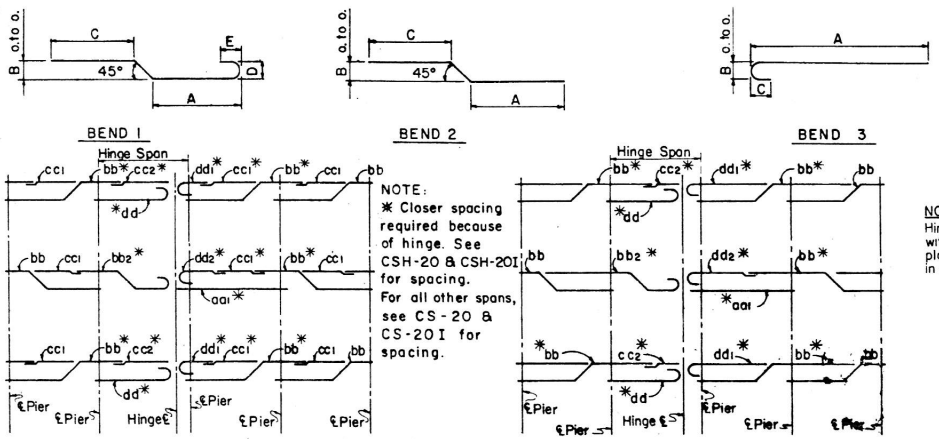

NOTE:

* Closer spacing required because of hinge. See CSH-20 & CSH-20I for spacing.

For all other spans, see CS-20 & CS-20I for spacing.

For 40' Span Lengths

For 35', 30' & 25' Span Lengths

STEEL PLACING DIAGRAM FOR HINGE SPAN & ADJACENT SPANS

TABLE OF W SECTIONS FOR VARIOUS SLAB THICKNESSES

Slab Thickness	W Section
19½"	W 21 x 111
17½"	W 18 x 97
15½"	W 16 x 77
13½"	W 14 x 90

DESIGN APPROVED	ARIZONA DEPARTMENT OF TRANSPORTATION HIGHWAYS DIVISION STANDARD DRAWINGS	REVISION 10-86
APPROVED FOR DISTRIBUTION	SLAB HINGE JOINT AND HINGE SPAN REINFORCING DETAILS	STANDARD NO. B-10.11

DESIGN	KW	9-72	NO.	DESCRIPTION OF REVISIONS	MADE BY	DATE	NO.	DESCRIPTION OF REVISIONS	MADE BY	DATE
DRAWN	LAM	9-72	①	Added Alt. Bolt Detail	WSK:sea	2-11-75	④	Changed Reinf. Note	CH	10-86
CHECKED	RLC	9-72	②	Wall Thicknesses	G.H.	7-14-76	⑤			
			③	Change Notes	WEB.	12-82	⑥			

NOTE:
When straight anchor bolt will not fit in headwall use alternate anchor bolt.

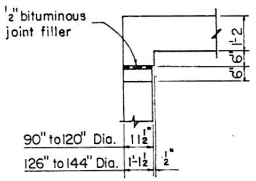

DETAIL B

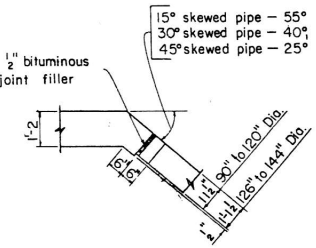

DETAIL C

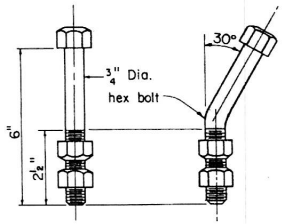

ANCHOR BOLT DETAIL

ALTERNATE ANCHOR BOLT DETAIL

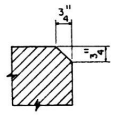

Chamfer all exposed corners as shown unless otherwise noted. This note applicable to all sheets.

CHAMFER DETAIL

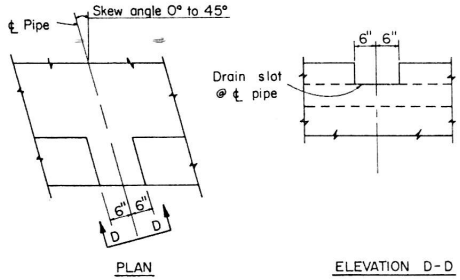

PLAN

ELEVATION D-D

APRON DRAIN DETAIL

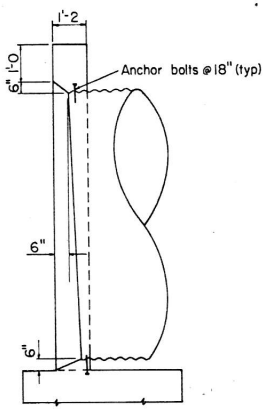

Outlet End

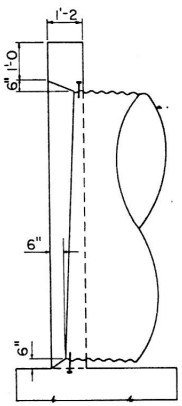

Inlet End

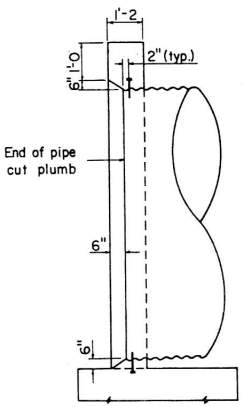

Outlet or Inlet End

DETAIL D

DETAIL E

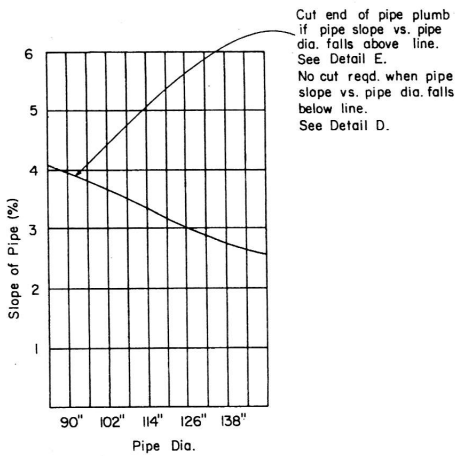

CHART

(Use to determine treatment at end of pipe)

GENERAL NOTES

Design - AASHTO St'd. Spec's for Highway Bridges 1977.

Construction - St'd. Spec's. Ariz. Dept. of Transportation Edition of 1982 revised to date.

All Concrete shall be Class 'S', f'_c = 3000 psi.

Reinforcing steel shall conform to ASTM Spec's. A615.
Bar sizes #6 and smaller shall be Gr. 40 or Gr. 60; f_s = 20,000 psi
Bar sizes #7 and larger shall be Grade 60; f_s = 24,000 psi

All bend dimensions for reinforcing steel shall be out to out of bars.

All reinforcing steel shall have 2" clear cover unless noted otherwise.

Dimensions shall not be scaled from drawings.

Bolt material shall conform to ASTM Spec's A 307.

Bolts shall be galvanized to conform to ASTM Spec's A153.

When end of pipe is cut to fit skew or slope, disturbed area of pipe shall be treated in accordance with requirements of the Standard Spec's.

DESIGN APPROVED	ARIZONA DEPARTMENT OF TRANSPORTATION HIGHWAYS DIVISION STANDARD DRAWINGS	10-86
APPROVED FOR DISTRIBUTION	PIPE CULVERT HEADWALLS MISCELLANEOUS DETAILS	STANDARD NO. B-11.10

DESIGN	K. W.	9-72	NO.	DESCRIPTION OF REVISIONS	MADE BY	DATE
DRAWN	G. H.	9-72	1	Wall Thicknesses	G.H.	7-14-76
CHECKED	R.L.C.	9-72	2			
			3			

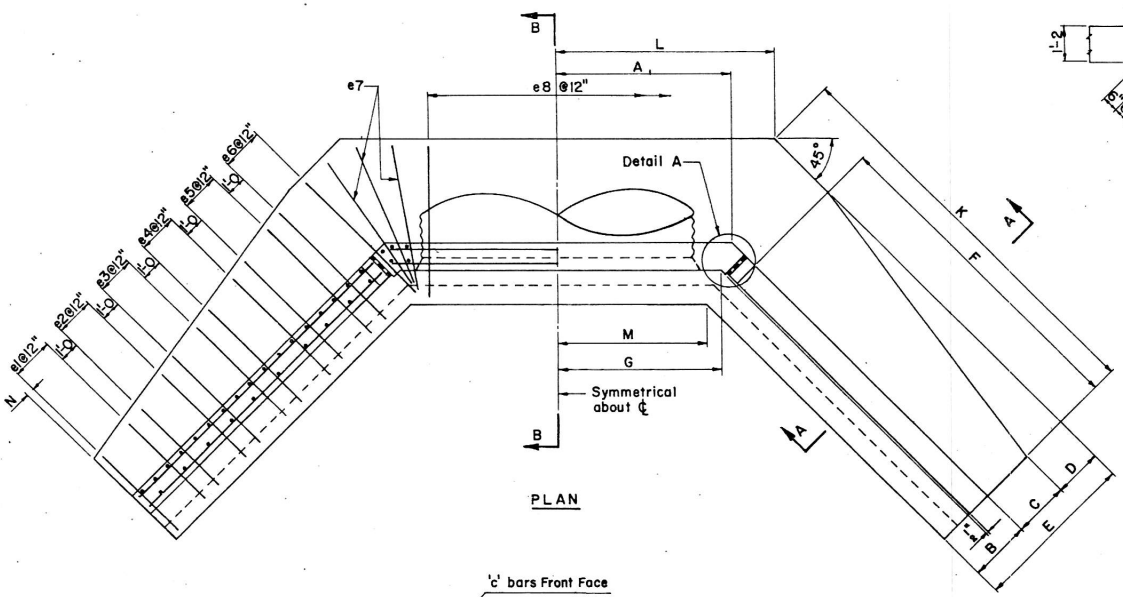

PLAN

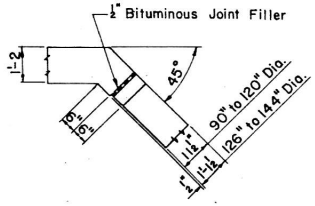

DETAIL A

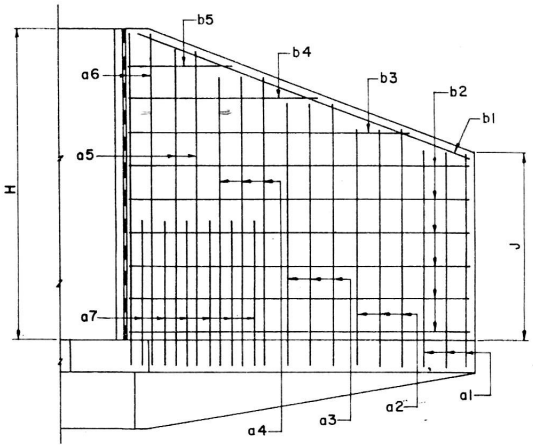

Back Face
WING ELEVATION

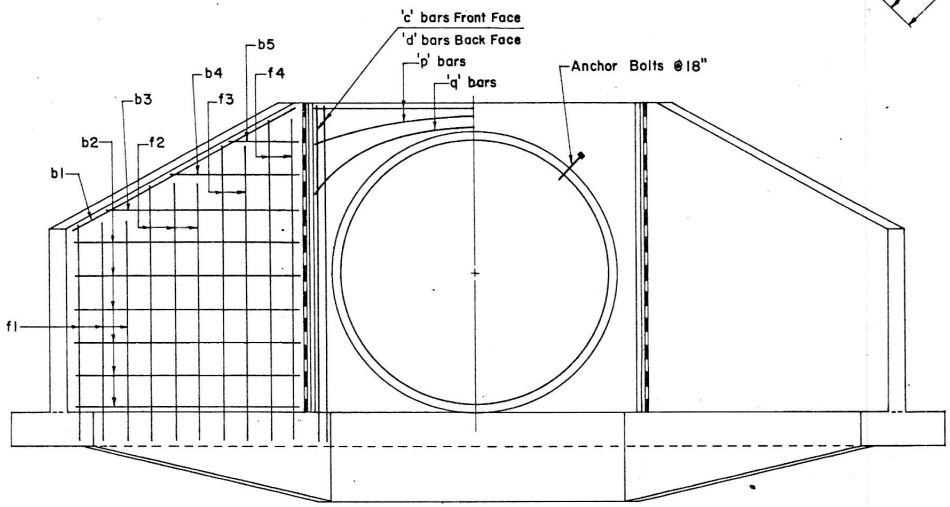

ELEVATION

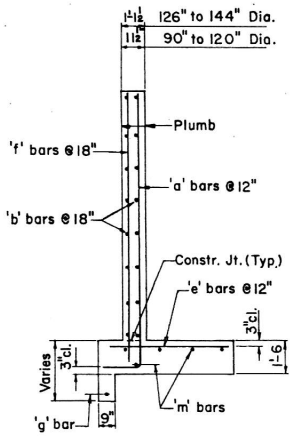

SECTION A-A

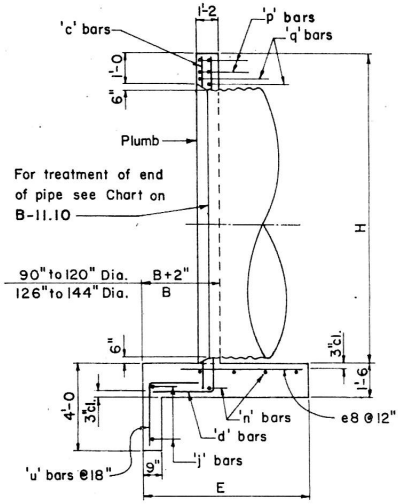

SECTION B-B

Notes: For General Notes and Misc. Details see B-11.10.
For steel list and bend diagrams see B-12.30, B-12.40 or B-12.50.

DESIGN APPROVED	ARIZONA DEPARTMENT OF TRANSPORTATION HIGHWAYS DIVISION STANDARD DRAWINGS	REVISION
APPROVED FOR DISTRIBUTION	INLET HEADWALL RIGHT ANGLE PIPE CULVERT	STANDARD NO. B-12.10

DESIGN	K.W.	9-72	NO.	DESCRIPTION OF REVISIONS	MADE BY	DATE
DRAWN	G.H.	9-72	1	Wall Thicknesses	G.H.	7-14-76
CHECKED	R.L.C.	9-72	2			
			3			

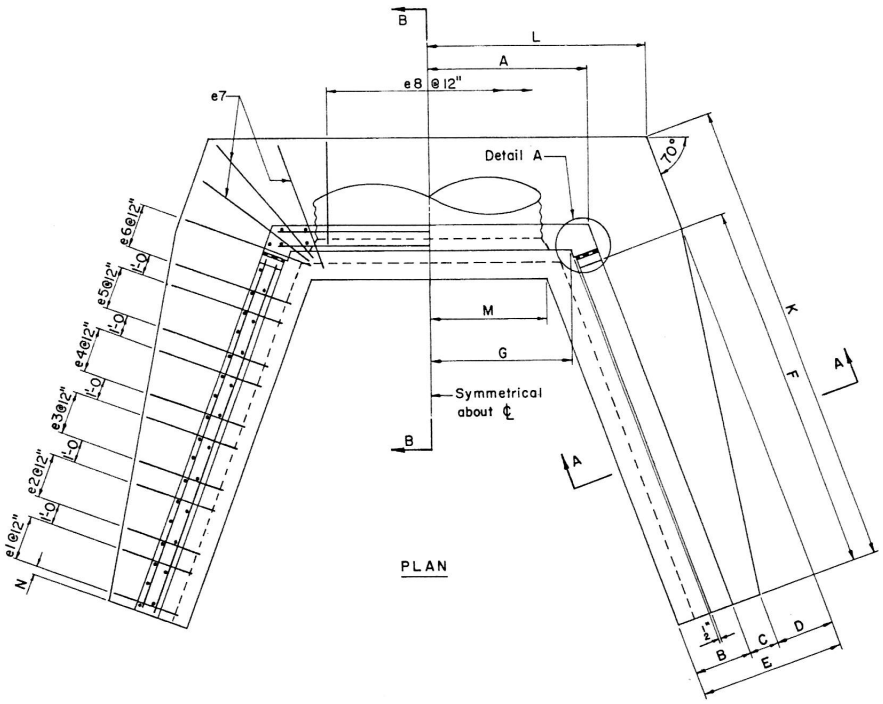

PLAN

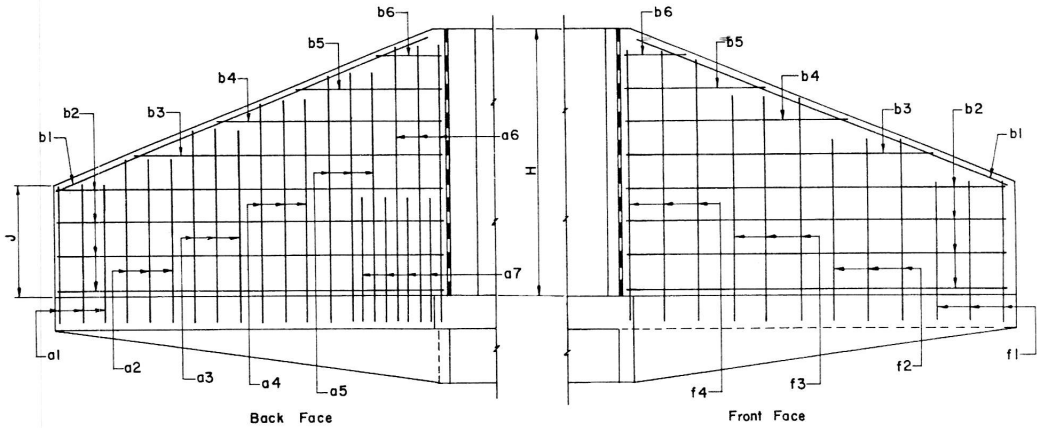

Back Face

WING ELEVATION

Front Face

WING ELEVATION

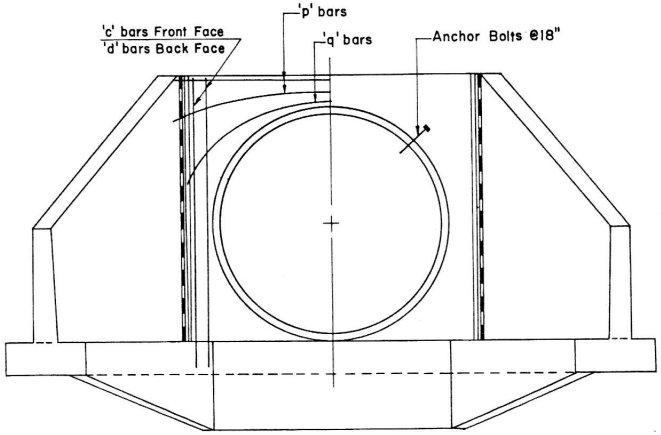

ELEVATION

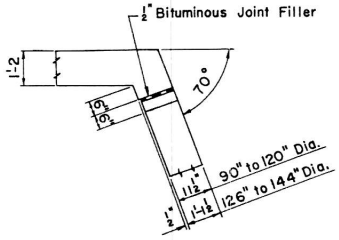

DETAIL A

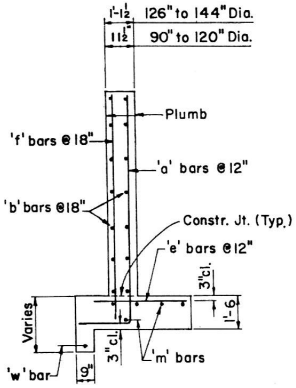

SECTION A-A

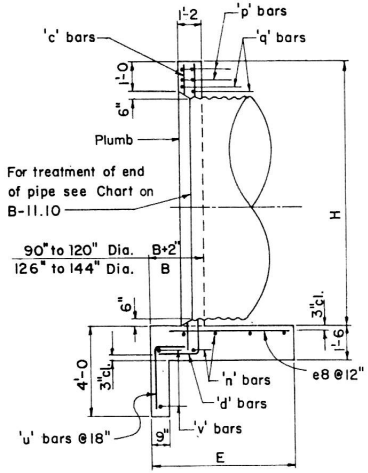

SECTION B-B

Notes: For General Notes and Misc. Details see B-11.10.
For steel list and bend diagrams see B-12.30, B-12.40 or B-12.50.

DESIGN APPROVED	ARIZONA DEPARTMENT OF TRANSPORTATION HIGHWAYS DIVISION STANDARD DRAWINGS	REVISION
K.C. Buchler		
APPROVED FOR DISTRIBUTION	OUTLET HEADWALL RIGHT ANGLE PIPE CULVERT	STANDARD NO.
E.J. Handler		B-12.20

STEEL LIST - INLET END

Mark	Bend	90" Dia			96" Dia			102" Dia			108" Dia			114" Dia			120" Dia			126" Dia			132" Dia			138" Dia			144" Dia		
		No	Size	Lgth	No	Size	Lgth	No	Size	Lgth	No	Size	Lgth	No	Size	Lgth	No	Size	Lgth	No	Size	Lgth	No	Size	Lgth	No	Size	Lgth	No	Size	Lgth
a1	A	6	#5	8-6	6	#5	9-0	6	#5	9-3	6	#5	9-6	6	#5	10-0	6	#5	10-3	6	#6	10-6	6	#6	10-9	6	#6	11-3	6	#6	11-6
a2	A	6	#5	9-6	6	#5	10-0	6	#5	10-3	6	#5	10-6	6	#6	11-0	6	#6	11-3	6	#6	11-6	6	#7	11-9	6	#7	12-6	6	#7	12-6
a3	A	6	#5	10-6	6	#6	11-0	6	#6	11-3	6	#6	11-6	6	#6	12-0	6	#7	12-3	6	#7	12-9	6	#7	13-0	6	#8	13-6	6	#8	13-9
a4	A	6	#6	11-9	6	#6	12-0	4	#7	12-3	6	#7	12-6	6	#7	13-0	6	#7	13-3	6	#8	13-9	6	#8	14-0	6	#8	14-6	6	#8	14-9
a5	A							4	#7	13-0	4	#8	13-6	4	#8	14-0	6	#8	14-3	6	#8	14-9	4	#8	15-0	4	#8	15-6	6	#8	15-9
a6	A																						4	#8	15-9	4	#8	16-3	4	#8	17-0
a7	A																						8	#4	5-0	8	#4	5-6	10	#4	6-0
b1	str	4	#4	11-6	4	#4	12-0	4	#4	12-6	4	#4	13-3	4	#4	14-0	4	#4	14-6	4	#4	15-0	4	#4	15-9	4	#4	16-3	4	#4	16-9
b2	str	16	#4	11-0	16	#4	11-6	16	#4	12-0	20	#4	12-9	20	#4	13-6	20	#4	14-0	20	#4	14-6	20	#4	15-0	24	#4	15-6	24	#4	16-0
b3	str	4	#4	8-6	4	#4	10-3	4	#4	11-6	4	#4	9-0	4	#4	10-3	4	#4	11-9	4	#4	13-6	4	#4	14-6	4	#4	11-6	4	#4	13-0
b4	str	4	#4	4-0	4	#4	6-3	4	#4	7-3	4	#4	4-9	4	#4	6-0	4	#4	7-6	4	#4	8-9	4	#4	10-3	4	#4	7-3	4	#4	8-9
b5	str				4	#4	2-0	4	#4	3-9				4	#4	2-0	4	#4	3-9	4	#4	5-0	4	#4	6-6	4	#4	3-9	4	#4	5-0
c	str	4	#4	10-6	4	#4	11-0	4	#4	11-6	4	#4	12-0	4	#4	12-6	4	#4	13-0	4	#4	13-6	4	#4	14-0	4	#4	14-6	4	#4	15-0
d	A	6	#6	12-3	6	#6	12-9	6	#7	13-3	6	#8	13-9	6	#8	14-6	6	#8	15-0	6	#8	15-6	6	#8	16-0	6	#8	16-6	6	#8	17-0
e1	str	6	#4	2-9	6	#4	3-0	6	#4	3-0	6	#4	3-3	6	#4	3-6	6	#4	3-6	6	#4	3-9	6	#4	3-9	6	#4	4-0	6	#5	4-3
e2	str	6	#4	3-3	6	#4	3-6	6	#4	3-9	6	#4	4-0	6	#4	4-0	6	#4	4-0	6	#5	4-3	6	#5	4-6	6	#5	4-6	6	#5	4-9
e3	str	6	#4	4-0	6	#5	4-3	6	#5	4-3	6	#5	4-6	6	#5	4-6	6	#5	4-9	6	#6	4-9	6	#6	5-0	6	#6	5-3	6	#6	5-3
e4	str	6	#5	4-6	6	#5	4-9	6	#5	4-6	6	#6	4-9	6	#6	5-0	6	#6	5-0	6	#7	5-3	6	#7	5-6	6	#7	5-9	6	#7	5-9
e5	str							4	#5	4-9	4	#6	5-0	6	#6	5-3	6	#6	5-6	6	#7	5-9	8	#7	6-0	6	#8	6-0	6	#8	6-3
e6	str																									4	#8	6-3	4	#8	6-9
e7	str	4	#5	4-6	4	#5	4-9	4	#5	4-9	4	#6	5-0	4	#6	5-3	6	#6	5-6	6	#7	6-0	6	#7	6-0	6	#8	6-3	6	#8	6-9
e8	str	9	#5	4-6	10	#5	4-9	10	#5	4-9	11	#6	5-0	11	#6	5-3	11	#6	5-6	12	#7	6-0	13	#7	6-0	12	#8	6-3	13	#8	6-9
f1	str	6	#4	6-9	6	#4	7-3	6	#4	7-6	6	#4	7-9	6	#4	8-0	6	#4	8-3	6	#4	8-6	6	#4	9-0	6	#4	9-3	6	#4	9-6
f2	str	6	#4	8-6	6	#4	8-9	6	#4	9-0	6	#4	9-6	6	#4	9-6	6	#4	10-0	6	#4	10-0	6	#4	10-6	6	#4	10-9	6	#4	11-0
f3	str	4	#4	10-0	4	#4	10-3	6	#4	10-6	6	#4	11-0	4	#4	11-0	4	#4	11-6	6	#4	11-6	6	#4	12-0	6	#4	12-6	6	#4	12-6
f4	str													4	#4	12-3	4	#4	12-6	4	#4	13-3	4	#4	13-9	4	#4	14-0	6	#4	14-3
g	str	2	#4	11-6	2	#4	12-0	2	#4	12-6	2	#4	13-0	2	#4	13-6	2	#4	14-0	2	#4	14-6	2	#4	15-0	2	#4	15-6	2	#4	16-0
u	B	7	#4	4-6	7	#4	4-9	8	#4	4-9	8	#4	4-9	8	#4	4-9	8	#4	5-0	9	#4	5-0	9	#4	5-0	9	#4	5-0	10	#4	5-0
j	str	2	#4	9-3	2	#4	9-9	2	#4	10-3	2	#4	10-9	2	#4	11-3	2	#4	11-9	2	#4	12-3	2	#4	12-6	2	#4	13-0	2	#4	13-6
m	str	8	#4	11-9	8	#4	12-6	8	#4	13-0	8	#4	13-6	10	#4	14-6	10	#4	15-3	10	#4	16-0	10	#4	16-6	10	#4	17-0	10	#4	17-9
n	str	5	#4	11-6	5	#4	11-6	5	#4	12-0	5	#4	13-0	5	#4	13-0	5	#4	13-6	5	#4	14-0	5	#4	14-6	5	#4	15-0	5	#4	16-0
p	str	4	#5	10-0	4	#5	10-6	4	#5	11-0	4	#5	11-6	4	#5	12-0	4	#5	12-6	4	#5	13-0	4	#5	13-6	4	#5	14-0	4	#5	14-6
q	str	2	#6	12-0	2	#6	12-6	2	#6	13-0	2	#6	13-6	2	#6	14-0	2	#6	14-6	2	#6	15-0	2	#6	15-6	2	#6	16-0	2	#6	16-6

STEEL LIST - OUTLET END

Mark	Bend	90" Dia			96" Dia			102" Dia			108" Dia			114" Dia			120" Dia			126" Dia			132" Dia			138" Dia			144" Dia		
		No	Size	Lgth	No	Size	Lgth	No	Size	Lgth	No	Size	Lgth	No	Size	Lgth	No	Size	Lgth	No	Size	Lgth	No	Size	Lgth	No	Size	Lgth	No	Size	Lgth
a1	A	6	#4	7-0	6	#4	7-3	6	#4	7-3	6	#4	7-6	6	#4	8-0	6	#4	8-0	6	#4	8-3	6	#4	8-6	6	#4	8-9	6	#5	9-3
a2	A	6	#4	8-6	6	#4	8-6	6	#4	8-9	6	#4	8-9	6	#5	9-6	6	#5	9-6	6	#5	9-9	6	#5	10-0	6	#5	10-3	6	#6	10-9
a3	A	6	#5	9-9	6	#5	10-0	6	#5	10-3	6	#5	10-3	6	#6	10-9	6	#6	11-0	6	#6	11-3	6	#6	11-6	6	#6	11-9	6	#7	12-0
a4	A	6	#6	11-3	4	#6	11-6	6	#6	11-9	6	#6	11-9	6	#7	12-3	6	#7	12-3	6	#7	12-6	6	#7	12-9	6	#7	13-0	6	#8	13-6
a5	A				4	#7	12-6	4	#7	13-0	4	#7	13-3	6	#8	13-9	4	#8	13-6	4	#8	14-0	6	#8	14-0	6	#8	14-6	6	#8	15-0
a6	A																4	#8	14-6	4	#8	15-0	4	#8	15-6	4	#8	16-0	6	#8	16-6
a7	A																			4	#4	4-6	6	#4	5-0	10	#4	5-6	12	#4	6-0
b1	str.	4	#4	12-6	4	#4	13-0	4	#4	14-0	4	#4	14-9	4	#4	15-6	4	#4	16-6	4	#4	16-9	4	#4	17-6	4	#4	18-0	4	#4	18-6
b2	str.	12	#4	11-6	12	#4	12-0	16	#4	12-9	12	#4	12-9	16	#4	14-3	16	#4	15-0	16	#4	15-6	16	#4	16-0	16	#4	16-6	20	#4	17-0
b3	str.	4	#4	10-3	4	#4	11-3	4	#4	9-0	4	#4	13-3	4	#4	11-6	4	#4	12-3	4	#4	13-6	4	#4	14-6	4	#4	15-6	4	#4	13-6
b4	str.	4	#4	7-0	4	#4	8-0	4	#4	6-0	4	#4	10-3	4	#4	8-3	4	#4	9-3	4	#4	10-3	4	#4	11-3	4	#4	12-3	4	#4	10-3
b5	str.	4	#4	3-9	4	#4	4-9	4	#4	2-9	4	#4	7-0	4	#4	5-0	4	#4	6-0	4	#4	7-0	4	#4	8-3	4	#4	9-0	4	#4	7-0
b6	str.										4	#4	3-9				4	#4	2-6	4	#4	3-9	4	#4	5-0	4	#4	6-0	4	#4	3-9
c	str.	4	#4	10-6	4	#4	11-0	4	#4	11-6	4	#4	12-0	4	#4	12-6	4	#4	13-0	4	#4	13-6	4	#4	14-0	4	#4	14-6	4	#4	15-0
d	A	6	#6	12-3	6	#7	12-9	6	#7	13-3	6	#7	13-9	6	#8	14-6	6	#8	15-0	6	#8	15-6	6	#8	16-0	6	#8	16-6	6	#8	17-0
e1	str.	6	#4	1-9	6	#4	2-0	6	#4	2-0	6	#4	2-0	6	#4	2-3	6	#4	2-3	6	#4	2-3	6	#4	2-6	6	#4	2-6	6	#4	2-9
e2	str.	6	#4	2-6	6	#4	2-6	6	#4	2-9	6	#4	2-9	6	#4	2-9	6	#4	3-0	6	#4	3-0	6	#4	3-3	6	#4	3-3	6	#4	3-6
e3	str.	6	#4	3-3	6	#4	3-3	6	#4	3-3	6	#4	3-6	6	#4	3-6	6	#4	3-9	6	#5	3-9	6	#5	4-0	6	#5	4-0	6	#5	4-3
e4	str.	4	#4	3-9	4	#4	4-0	6	#5	4-0	6	#5	4-3	6	#5	4-3	6	#5	4-3	6	#6	4-6	6	#6	4-9	6	#6	4-9	6	#6	4-9
e5	str.	4	#4	4-3	4	#5	4-6	4	#5	4-9	6	#6	4-5	6	#6	5-0	4	#6	5-0	6	#7	5-0	6	#7	5-3	6	#7	5-3	6	#7	5-6
e6	str.																4	#7	5-6	4	#7	5-9	4	#7	6-0	6	#8	6-0	6	#8	6-3
e7	str.	4	#4	4-3	4	#5	4-6	4	#5	4-9	4	#6	4-9	6	#6	5-0	6	#7	5-6	6	#7	5-9	6	#7	6-0	6	#8	6-0	6	#8	6-3
e8	str.	8	#4	4-3	8	#5	4-6	9	#5	4-9	9	#6	4-9	10	#6	5-0	10	#7	5-6	10	#7	5-9	10	#7	6-0	11	#8	6-0	12	#8	6-3
f1	str.	6	#4	5-6	6	#4	5-6	6	#4	6-0	6	#4	5-9	6	#4	6-3	6	#4	6-3	6	#4	6-6	6	#4	6-9	6	#4	7-0	6	#4	7-3
f2	str.	6	#4	7-6	6	#4	7-9	6	#4	8-0	6	#4	8-0	6	#4	8-3	6	#4	8-3	6	#4	8-9	6	#4	9-0	6	#4	9-0	6	#4	9-6
f3	str.	6	#4	9-6	6	#4	9-9	6	#4	10-3	4	#4	10-0	4	#4	10-6	6	#4	10-6	6	#4	10-9	6	#4	11-3	6	#4	11-3	6	#4	11-6
f4	str.										4	#4	11-6	4	#4	11-9	4	#4	12-6	4	#4	13-0	4	#4	13-3	6	#4	13-3	6	#4	13-9
u	B	6	#4	4-6	6	#4	4-9	7	#4	4-9	7	#4	4-9	7	#4	4-9	8	#4	5-0	8	#4	5-0	8	#4	5-0	8	#4	5-0	9	#4	5-0
m	str.	8	#4	14-6	8	#4	14-9	8	#4	15-9	8	#4	16-6	8	#4	17-3	8	#4	18-3	8	#4	18-9	10	#4	19-6	10	#4	20-6	10	#4	21-6
n	str.	5	#4	12-6	5	#4	13-6	5	#4	14-0	5	#4	14-6	5	#4	15-0	5	#4	16-0	5	#4	17-0	5	#4	18-0	5	#4	17-0	5	#4	18-0
p	str.	4	#5	10-0	4	#5	10-6	4	#5	11-0	4	#5	11-6	4	#5	12-0	4	#5	12-6	4	#5	13-0	4	#5	13-6	4	#5	14-0	4	#5	14-6
q	str.	2	#6	12-0	2	#6	12-6	2	#6	13-0	2	#6	13-6	2	#6	14-0	2	#6	14-6	2	#6	15-0	2	#6	15-6	2	#6	16-0	2	#6	16-6
v	str.	2	#4	8-6	2	#4	9-0	2	#4	9-3	2	#4	9-9	2	#4	10-3	2	#4	10-9	2	#4	11-3	2	#4	11-9	2	#4	12-0	2	#4	12-6
w	str.	2	#4	12-0	2	#4	12-6	2	#4	13-3	2	#4	13-9	2	#4	14-6	2	#4	15-3	2	#4	15-9	2	#4	16-3	2	#4	16-9	2	#4	17-3

DIMENSIONS INLET END

Pipe Dia	A	B	C	D	E	F	G	H	J	K	L	M	N
90"	5-2	2-1	1-7	1-5	5-1	11-0	4-11	9-6	5-8	13-7 7/8	6-6 7/8	4-5 5/8	0-3
96"	5-5	2-2	1-8	1-6	5-4	11-6	5-2	10-0	6-0	14-2 3/4	6-10 3/4	4-8 1/4	0-6
102"	5-8	2-2	1-10	1-7	5-7	12-0	5-5	10-6	6-3	14-10	7-3	4-11 1/4	0-3
108"	5-11	2-3	1-11	1-8	5-10	12-9	5-8	11-0	6-7	15-7 3/4	7-6 7/8	5-1 3/4	0-1 1/2
114"	6-2	2-3	2-1	1-9	6-1	13-6	5-11	11-6	6-10	16-6	7-11	5-4 3/4	0-6
120"	6-5	2-4	2-2	1-10	6-4	14-0	6-2	12-0	7-1	17-0 7/8	8-2 7/8	5-7 3/8	0-3
126"	6-10 3/4	2-6	2-2	1-11	6-7	14-6	6-5	12-6	7-5	17-8	8-7 1/8	5-10 3/8	0-6
132"	7-1 3/4	2-7	2-3	2-0	6-10	15-0	6-8	13-0	7-9	18-2 7/8	8-10 7/8	6-1	0-3
138"	7-4 3/4	2-7	2-5	2-1	7-1	15-6	6-11	13-6	8-0	18-10 1/4	9-3 1/8	6-4	0-6
144"	7-7 3/4	2-8	2-6	2-2	7-4	16-0	7-2	14-0	8-4	19-5	9-7	6-6 1/2	0-3

DIMENSIONS OUTLET END

Pipe Dia	A	B	C	D	E	F	G	H	J	K	L	M	N
90"	5-6 5/8	2-1	0-11	2-1	5-1	11-6	4-11	9-6	4-2	15-3 5/8	7-8 5/8	4-1 7/8	0-6
96"	5-9 5/8	2-2	0-11	2-3	5-4	12-0	5-2	10-0	4-4	15-11	8-1	4-4 1/4	0-3
102"	6-0 5/8	2-2	1-0	2-5	5-7	12-9	5-5	10-6	4-6	16-10 1/8	8-6 1/8	4-7 1/4	0-1 1/2
108"	6-3 5/8	2-3	1-1	2-6	5-10	13-6	5-8	11-0	4-8	17-8 1/2	8-10 1/2	4-9 1/2	0-6
114"	6-6 5/8	2-3	1-2	2-8	6-1	14-3	5-11	11-6	4-10	18-7 5/8	9-3 5/8	5-0 1/2	0-4 1/2
120"	6-9 5/8	2-4	1-3	2-9	6-4	15-0	6-2	12-0	5-0	19-6	9-8	5-2 3/4	0-3
126"	7-2 3/4	2-6	1-3	2-10	6-7	15-6	6-5	12-6	5-3	10-2 1/8	10-1 1/8	5-5 3/4	0-6
132"	7-5 3/4	2-6	1-4	3-0	6-10	16-0	6-8	13-0	5-6	20-10 1/4	10-6 1/4	5-8 3/4	0-3
138"	7-8 3/4	2-7	1-5	3-1	7-1	16-6	6-11	13-6	5-9	21-5 5/8	10-10 5/8	5-11 1/8	0-6
144"	7-11 3/4	2-8	1-6	3-2	7-4	17-0	7-2	14-0	6-0	22-1	11-3	6-1 3/8	0-3

QUANTITIES

Pipe Dia.	Inlet		Outlet	
	Reinf. (lbs)	Conc. (CY)	Reinf. (lbs)	Conc. (CY)
90"	1050	19.44	995	19.74
96"	1160	21.19	1175	21.36
102"	1375	23.00	1295	23.42
108"	1645	25.19	1415	25.54
114"	1815	27.49	1770	27.79
120"	2020	29.50	2010	30.10
126"	2330	34.35	2165	34.87
132"	2590	36.74	2365	37.27
138"	2870	39.22	2580	39.72
144"	3120	41.75	2955	42.23

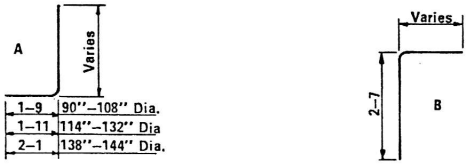

BENDS

NOTE:

Quantities and steel list shown are for one headwall

DESIGN APPROVED	ARIZONA DEPARTMENT OF TRANSPORTATION HIGHWAYS DIVISION STANDARD DRAWINGS	REVISION
APPROVED FOR DISTRIBUTION	INLET AND OUTLET HEADWALLS RIGHT ANGLE PIPE CULVERT 2:1 SLOPE	STANDARD NO. B-12.30

DESIGN K W | 9-72 | DRAWN L.A.M. | 9-72 | CHECKED R.L.C. | 9-72

STEEL LIST - INLET END

Mark	Bend	90" Dia No	90" Size	90" Lgth	96" Dia No	96" Size	96" Lgth	102" Dia No	102" Size	102" Lgth	108" Dia No	108" Size	108" Lgth	114" Dia No	114" Size	114" Lgth
a1	A	8	#5	10-0	6	#5	11-3	8	#5	10-9	8	#6	11-0	8	#6	11-6
a2	A	8	#5	10-9	6	#5	11-0	6	#6	11-6	6	#6	11-9	8	#6	12-3
a3	A	6	#6	11-6	6	#6	11-6	6	#6	12-0	6	#7	12-3	6	#7	13-0
a4	A	6	#6	12-0	6	#6	12-0	6	#7	12-6	6	#7	13-0	6	#8	13-9
a5	A				6	#7	12-6	6	#7	13-0	6	#8	13-6	6	#8	14-3
a6	A															
a7	A															
b1	str	4	#4	13-6	4	#4	14-3	4	#4	15-0	4	#4	15-9	4	#4	16-6
b2	str	20	#4	13-3	20	#4	14-0	24	#4	14-9	24	#4	15-6	24	#4	16-3
b3	str	4	#4	9-0	4	#4	11-0	4	#4	6-3	4	#4	9-0	4	#4	11-9
b4	str				4	#4	3-0							4	#4	3-6
b5	str															
c	str	4	#4	10-6	4	#4	11-0	4	#4	11-6	4	#4	12-0	4	#4	12-6
d	A	6	#6	12-3	6	#7	12-9	6	#7	13-3	6	#8	13-9	6	#8	14-6
e1	str	8	#4	3-9	6	#4	4-0	8	#4	4-0	8	#4	4-3	8	#4	4-6
e2	str	8	#4	4-0	6	#4	4-3	6	#4	4-3	6	#4	4-6	8	#5	4-9
e3	str	6	#4	4-3	12	#4	4-6	6	#4	4-6	6	#5	4-9	6	#5	5-0
e4	str	6	#4	4-6	6	#5	4-9	6	#5	4-9	6	#5	5-0	6	#5	5-3
e5	str							6	#5	5-0	6	#5	5-3	6	#6	5-6
e6	str															
e7	str	4	#4	4-6	4	#5	4-9	4	#5	5-0	4	#5	5-3	6	#6	5-6
e8	str	10	#4	4-6	10	#5	4-9	11	#5	5-0	11	#5	5-3	12	#6	5-6
f1	str	8	#4	8-3	8	#4	8-6	8	#4	9-0	8	#4	9-3	6	#4	9-9
f2	str	6	#4	9-3	6	#4	9-6	8	#4	10-0	8	#4	10-6	6	#4	10-6
f3	str	6	#4	10-3	6	#4	10-6	6	#4	11-3	6	#4	11-6	6	#4	11-3
f4	str													6	#4	12-0
g	str	2	#4	12-6	2	#4	13-6	2	#4	14-0	2	#4	14-6	2	#4	15-3
u	B	7	#4	4-6	7	#4	4-9	8	#4	4-9	8	#4	4-9	8	#4	4-9
j	str	2	#4	9-3	2	#4	9-6	2	#4	10-0	2	#4	10-6	2	#4	11-0
m	str	8	#4	16-0	8	#4	16-6	8	#4	17-6	8	#4	18-6	8	#4	19-0
n	str	5	#4	12-9	5	#4	13-6	5	#4	14-0	5	#4	14-6	5	#4	15-3
p	str	4	#5	10-0	4	#5	10-6	4	#5	11-0	4	#5	11-6	4	#5	12-0
q	str	2	#6	12-0	2	#6	12-6	2	#6	13-0	2	#6	13-6	2	#6	14-0

Mark	Bend	120" Dia No	120" Size	120" Lgth	126" Dia No	126" Size	126" Lgth	132" Dia No	132" Size	132" Lgth	138" Dia No	138" Size	138" Lgth	144" Dia No	144" Size	144" Lgth
a1	A	6	#6	12-0	8	#6	12-3	8	#7	12-9	8	#7	13-3	8	#8	13-9
a2	A	6	#6	12-6	6	#7	13-0	6	#7	13-6	8	#8	14-0	8	#8	14-6
a3	A	6	#7	13-0	6	#7	13-6	6	#8	14-0	6	#8	14-9	8	#8	15-0
a4	A	6	#8	13-9	6	#8	14-3	6	#8	14-6	6	#8	15-3	6	#8	15-9
a5	A	6	#8	14-3	6	#8	14-9	6	#8	15-3	6	#8	15-9	6	#8	16-3
a6	A	6	#8	14-9	6	#8	15-3	6	#8	15-9	6	#8	16-3	6	#8	16-9
a7	A				6	#4	4-6	12	#4	5-0	18	#4	5-6	26	#4	6-0
b1	str	4	#4	17-3	4	#4	18-0	4	#4	18-9	4	#4	19-6	4	#4	20-3
b2	str	24	#4	17-0	28	#4	17-9	28	#4	18-6	28	#4	19-3	28	#4	20-0
b3	str	4	#4	14-9	4	#4	8-9	4	#4	3-6	4	#4	14-9	4	#4	17-6
b4	str	4	#4	6-0							4	#4	6-0	4	#4	9-0
b5	str															
c	str	4	#4	13-0	4	#4	13-6	4	#4	14-0	4	#4	14-6	4	#4	15-0
d	A	6	#8	15-0	6	#8	15-6	6	#8	16-0	6	#8	16-6	6	#8	17-0
e1	str	6	#5	4-6	8	#5	4-9	8	#5	5-0	8	#5	5-3	8	#5	5-6
e2	str	6	#5	4-9	6	#5	5-0	6	#5	5-3	8	#6	5-6	8	#6	5-9
e3	str	6	#5	5-0	6	#5	5-3	6	#6	5-6	6	#6	5-9	8	#7	6-0
e4	str	6	#5	5-3	6	#6	5-6	6	#6	5-9	6	#7	6-0	6	#7	6-3
e5	str	6	#6	5-6	6	#6	5-9	6	#7	6-0	6	#7	6-3	6	#7	6-6
e6	str	6	#6	5-9	6	#7	6-0	6	#7	6-3	6	#7	6-6	6	#8	6-9
e7	str	6	#6	5-9	6	#7	6-0	6	#7	6-3	6	#7	6-6	6	#8	6-9
e8	str	12	#6	5-9	13	#7	6-0	13	#7	6-3	13	#7	6-6	14	#8	6-9
f1	str	6	#4	10-0	8	#4	10-6	8	#4	10-9	8	#4	11-3	8	#4	11-6
f2	str	6	#4	11-0	6	#4	11-6	6	#4	12-0	8	#4	12-3	8	#4	12-9
f3	str	6	#4	11-9	6	#4	12-3	6	#4	12-9	6	#4	13-3	6	#4	13-6
f4	str	6	#4	12-6	6	#4	13-0	6	#4	13-6	6	#4	14-0	6	#4	14-6
g	str	2	#4	16-0	2	#4	16-9	2	#4	17-3	2	#4	18-0	2	#4	18-6
u	B	8	#4	5-0	9	#4	5-0	9	#4	5-0	9	#4	5-0	10	#4	5-0
j	str	2	#4	11-6	2	#4	12-0	2	#4	12-6	2	#4	13-0	2	#4	13-6
m	str	8	#4	20-0	8	#4	21-0	10	#4	21-9	10	#4	22-6	10	#4	23-6
n	str	5	#4	16-0	5	#4	16-6	5	#4	17-3	5	#4	18-0	5	#4	18-9
p	str	4	#5	12-6	4	#5	13-0	4	#5	13-6	4	#5	14-0	4	#5	14-6
q	str	2	#6	14-6	2	#6	15-0	2	#6	15-6	2	#6	16-0	2	#6	16-6

STEEL LIST - OUTLET END

Mark	Bend	90" Dia No	90" Size	90" Lgth	96" Dia No	96" Size	96" Lgth	102" Dia No	102" Size	102" Lgth	108" Dia No	108" Size	108" Lgth	114" Dia No	114" Size	114" Lgth
a1	A	8	#4	9-0	6	#4	9-6	6	#5	9-9	8	#5	10-0	8	#5	10-6
a2	A	8	#5	10-3	6	#5	10-3	6	#5	10-6	6	#6	11-3	8	#6	11-6
a3	A	6	#6	11-3	6	#6	11-0	6	#6	11-6	6	#6	12-0	6	#7	12-6
a4	A	6	#6	12-0	6	#6	11-9	6	#6	12-3	6	#7	12-9	6	#7	13-3
a5	A				4	#7	12-6	6	#7	13-0	6	#7	13-3	6	#8	14-0
a6	A															
a7	A															
b1	str	4	#4	13-3	4	#4	13-9	4	#4	14-9	4	#4	15-6	4	#4	16-3
b2	str	20	#4	13-0	20	#4	13-6	20	#4	14-3	20	#4	15-0	20	#4	15-9
b3	str	4	#4	6-9	4	#4	8-9	4	#4	10-9	4	#4	13-0	4	#4	15-0
b4	str				4	#4	3-0	4	#4	5-0	4	#4	7-0	4	#4	9-0
b5	str													4	#4	3-0
b6	str															
c	str	4	#4	10-6	4	#4	11-0	4	#4	11-6	4	#4	12-0	4	#4	12-6
d	A	6	#6	12-3	6	#7	12-9	6	#7	13-3	6	#8	13-9	6	#8	14-6
el	str	8	#4	3-3	8	#4	3-3	8	#4	3-6	8	#4	3-6	10	#4	3-6
e2	str	8	#4	3-6	8	#4	3-6	8	#4	3-9	8	#4	3-9	8	#4	4-0
e3	str	6	#4	3-9	8	#4	4-0	8	#5	4-0	8	#5	4-3	8	#5	4-6
e4	str	6	#4	4-0	6	#5	4-3	6	#5	4-6	8	#5	4-9	8	#6	5-0
e5	str															
e6	str															
e7	str	4	#4	4-0	4	#5	4-3	4	#5	4-6	4	#5	4-9	6	#6	5-0
e8	str	9	#4	4-0	10	#5	4-3	11	#5	4-6	11	#5	4-9	12	#6	5-0
f1	str	6	#4	7-6	8	#4	8-0	8	#4	8-3	8	#4	8-3	8	#4	8-9
f2	str	6	#4	8-9	6	#4	9-0	6	#4	9-9	8	#4	10-0	8	#4	10-3
f3	str	6	#4	9-9	6	#4	10-3	6	#4	10-9	6	#4	11-3	6	#4	11-9
f4	str															
u	B	6	#4	4-6	6	#4	4-9	7	#4	4-9	7	#4	4-9	7	#4	4-9
m	str	8	#4	16-6	8	#4	17-3	8	#4	18-0	8	#4	19-0	8	#4	19-9
n	str	5	#4	12-6	5	#4	13-3	5	#4	14-0	5	#4	14-6	5	#4	15-3
p	str	4	#5	10-0	4	#5	10-6	4	#5	11-0	4	#5	11-6	4	#5	12-0
q	str	2	#6	12-0	2	#6	12-6	2	#6	13-0	2	#6	13-6	2	#6	14-0
v	str	2	#4	8-6	2	#4	9-0	2	#4	9-3	2	#4	9-9	2	#4	10-3
w	str	2	#4	13-6	2	#4	14-0	2	#4	14-9	2	#4	15-3	2	#4	16-0

Mark	Bend	120" Dia No	120" Size	120" Lgth	126" Dia No	126" Size	126" Lgth	132" Dia No	132" Size	132" Lgth	138" Dia No	138" Size	138" Lgth	144" Dia No	144" Size	144" Lgth
a1	A	8	#6	11-0	6	#6	11-3	8	#6	11-6	8	#6	12-3	8	#7	12-6
a2	A	8	#6	12-0	6	#6	12-0	6	#7	12-6	6	#7	13-3	8	#8	13-6
a3	A	6	#7	13-0	6	#7	12-9	6	#7	13-3	6	#8	14-0	6	#8	14-6
a4	A	6	#8	13-9	6	#8	13-6	6	#8	14-0	6	#8	14-9	6	#8	15-3
a5	A	6	#8	14-6	6	#8	14-3	6	#8	15-0	6	#8	15-6	6	#8	16-0
a6	A				6	#8	15-0	6	#8	15-6	6	#8	16-3	6	#8	16-9
a7	A				6	#4	4-6	10	#4	5-0	12	#4	5-6	18	#4	6-0
b1	str	4	#4	17-0	4	#4	17-9	4	#4	18-3	4	#4	19-0	4	#4	19-6
b2	str	24	#4	16-6	24	#4	17-3	24	#4	17-9	24	#4	18-6	28	#4	19-0
b3	str	4	#4	11-0	4	#4	13-3	4	#4	15-0	4	#4	17-0	4	#4	13-3
b4	str	4	#4	5-0	4	#4	7-0	4	#4	9-0	4	#4	11-0	4	#4	7-3
b5	str							4	#4	3-0	4	#4	5-0			
b6	str															
c	str	4	#4	13-0	4	#4	13-6	4	#4	14-0	4	#4	14-6	4	#4	15-0
d	A	6	#8	15-0	6	#8	15-6	6	#8	16-0	6	#8	16-6	6	#8	17-0
el	str	8	#4	3-6	8	#4	3-9	8	#4	3-9	8	#4	4-0	8	#5	4-0
e2	str	8	#4	4-0	8	#5	4-3	8	#5	4-3	8	#5	4-6	8	#5	4-6
e3	str	8	#5	4-3	8	#5	4-9	8	#6	4-9	8	#6	5-0	8	#6	5-0
e4	str	6	#6	4-9	6	#6	5-3	8	#6	5-3	8	#7	5-6	8	#7	5-6
e5	str	6	#6	5-3	6	#7	5-9	6	#7	5-9	8	#7	6-0	8	#8	6-3
e6	str															
e7	str	6	#6	5-3	6	#7	5-9	6	#7	6-0	8	#7	6-3	8	#8	6-6
e8	str	12	#6	5-3	13	#7	5-9	13	#7	6-0	13	#7	6-3	14	#8	6-6
f1	str	6	#4	9-3	6	#4	9-6	8	#4	9-9	8	#4	10-0	8	#4	10-6
f2	str	6	#4	10-3	6	#4	10-6	6	#4	11-3	6	#4	11-6	6	#4	12-0
f3	str	6	#4	11-3	6	#4	11-9	6	#4	12-3	6	#4	12-6	6	#4	13-3
f4	str	6	#4	12-3	6	#4	12-9	6	#4	13-6	6	#4	13-9	6	#4	14-3
u	B	8	#4	5-0	8	#4	5-0	8	#4	5-0	8	#4	5-0	9	#4	5-0
m	str	8	#4	20-9	8	#4	21-9	10	#4	22-3	10	#4	23-3	10	#4	23-9
n	str	5	#4	16-0	5	#4	16-9	5	#4	17-3	5	#4	18-0	5	#4	18-6
p	str	4	#5	12-6	4	#5	13-0	4	#5	13-6	4	#5	14-0	4	#5	14-6
q	str	2	#6	14-6	2	#6	15-0	2	#6	15-6	2	#6	16-0	2	#6	16-6
v	str	2	#4	10-9	2	#4	11-3	2	#4	11-9	2	#4	12-0	2	#4	12-6
w	str	2	#4	16-9	2	#4	17-6	2	#4	18-0	2	#4	18-9	2	#4	19-3

DIMENSIONS INLET END

Pipe Dia	A	B	C	D	E	F	G	H	J	K	L	M	N
90"	5-2	2-0	2-4	0-9	5-1	13-3	4-11	9-6	7-3	15-11 1/4	6-7 1/4	4-6	0-4 1/2
96"	5-5	2-2	2-5	0-9	5-4	14-0	5-2	10-0	7-6	16-8 3/4	6-10 3/4	4-8 1/4	0-3
102"	5-8	2-2	2-6	0-11	5-7	14-9	5-5	10-6	7-11	17-7	7-3	4-11 1/4	0-1 1/2
108"	5-11	2-2	2-8	1-0	5-10	15-6	5-8	11-0	8-3	18-5 1/4	7-7 1/4	5-2 1/4	0-6
114"	6-2	2-3	2-9	1-1	6-1	16-3	5-11	11-6	8-7	19-3	7-11	5-4 3/4	0-4 1/2
120"	6-5	2-4	2-10	1-2	6-4	17-0	6-2	12-0	9-0	20-0 7/8	8-2 7/8	5-7 3/8	0-3
126"	6-10 3/4	2-6	2-10	1-3	6-7	17-9	6-5	12-6	9-4	20-11 1/8	8-7 1/8	5-10 3/8	0-1 1/2
132"	7-1 3/4	2-6	3-0	1-4	6-10	18-6	6-8	13-0	9-9	21-9 3/8	8-11 3/8	6-1 3/8	0-6
138"	7-4 3/4	2-7	3-1	1-5	7-1	19-3	6-11	13-6	10-1	22-7 1/8	9-3 1/8	6-4	0-4 1/2
144"	7-7 3/4	2-8	3-2	1-6	7-4	20-0	7-2	14-0	10-6	23-5	9-7	6-6 1/2	0-3

DIMENSIONS OUTLET END

Pipe Dia	A	B	C	D	E	F	G	H	J	K	L	M	N
90"	5-6 5/8	2-1	2-0	1-0	5-1	13-0	4-11	9-6	6-3	16-9 5/8	7-8 5/8	4-1 7/8	0-3
96"	5-9 5/8	2-2	2-1	1-1	5-4	13-6	5-2	10-0	6-7	17-5	8-1	4-4 1/4	0-6
102"	6-0 5/8	2-2	2-2	1-3	5-7	14-3	5-5	10-6	6-11	18-4 1/8	8-6 1/8	4-7 1/4	0-4 1/2
108"	6-3 5/8	2-3	2-3	1-4	5-10	15-0	5-8	11-0	7-3	19-2 1/2	8-10 1/2	4-9 1/2	0-3
114"	6-6 5/8	2-3	2-5	1-5	6-1	15-9	5-11	11-6	7-7	20-1 5/8	9-3 5/8	5-0 1/2	0-1 1/2
120"	6-9 5/8	2-4	2-6	1-6	6-4	16-6	6-2	12-0	7-11	21-0	9-8	5-2 3/4	0-6
126"	7-2 3/4	2-6	2-6	1-7	6-7	17-3	6-5	12-6	8-3	21-11 1/8	10-1 1/8	5-5 3/4	0-4 1/2
132"	7-5 3/4	2-6	2-7	1-9	6-10	17-9	6-8	13-0	8-7	22-7 1/4	10-6 1/4	5-8 3/4	0-1 1/2
138"	7-8 3/4	2-7	2-8	1-10	7-1	18-6	6-11	13-6	8-11	23-5 5/8	10-10 5/8	5-11 1/8	0-6
144"	7-11 3/4	2-8	2-9	1-11	7-4	19-0	7-2	14-0	9-4	24-1	11-3	6-1 3/8	0-3

QUANTITIES

Pipe Dia.	Inlet Reinf. (lbs)	Inlet Conc. (CY)	Outlet Reinf. (lbs)	Outlet Conc. (CY)
90"	1255	23.17	1225	22.98
96"	1510	25.37	1440	24.89
102"	1725	27.71	1610	27.21
108"	1995	30.18	1850	29.60
114"	2310	32.68	2155	32.18
120"	2595	35.33	2395	34.79
126"	2935	41.39	2755	40.65
132"	3235	44.57	3040	43.28
138"	3625	47.72	3325	46.43
144"	4125	51.07	3790	49.27

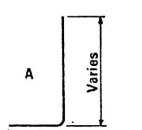

1-9	90"–108" Dia.
1-11	114"–132" Dia.
2-1	138"–144" Dia.

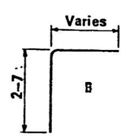

BENDS

NOTE:

Quantities and steel list shown are for one headwall.

DESIGN APPROVED

APPROVED FOR DISTRIBUTION

ARIZONA
DEPARTMENT OF TRANSPORTATION
HIGHWAYS DIVISION
STANDARD DRAWINGS

INLET AND OUTLET HEADWALLS
RIGHT ANGLE PIPE CULVERT
4:1 SLOPE

REVISION

STANDARD NO.
B-12.40

DESIGN K W 9-72 | DRAWN LAM 9-72 | CHECKED RLC 9-72

STEEL LIST - INLET END

Mark	Bend	90" Dia			96" Dia			102" Dia			108" Dia			114" Dia			120" Dia			126" Dia			132" Dia			138" Dia			144" Dia		
		No	Size	Lgth	No	Size	Lgth	No	Size	Lgth	No	Size	Lgth	No	Size	Lgth	No	Size	Lgth	No	Size	Lgth	No	Size	Lgth	No	Size	Lgth	No	Size	Lgth
a1	A	8	#5	10-6	10	#6	11-0	8	#6	11-3	8	#6	11-9	10	#6	12-3	10	#7	12-9	10	#7	13-3	10	#7	13-6	12	#8	14-3	10	#8	14-6
a2	A	6	#6	11-0	6	#6	11-9	6	#6	11-9	6	#6	12-3	6	#7	13-0	6	#7	13-6	8	#7	13-9	8	#8	14-3	8	#8	14-9	8	#8	15-3
a3	A	6	#6	11-6	6	#6	12-3	6	#6	12-3	6	#7	12-6	6	#7	13-3	6	#7	13-9	6	#8	14-3	8	#8	14-9	8	#8	15-3	8	#8	15-9
a4	A	6	#6	11-9	6	#7	12-6	6	#6	12-6	6	#7	13-0	6	#7	13-9	6	#8	14-0	6	#8	14-6	6	#8	15-0	6	#8	15-9	8	#8	16-0
a5	A	6	#6	12-3	6	#7	13-0	6	#7	13-0	6	#7	13-3	6	#8	14-0	6	#8	14-6	6	#8	15-0	6	#8	15-6	6	#8	16-3	6	#8	16-6
a6	A							4	#7	13-3	6	#7	13-9	6	#8	14-3	6	#8	14-9	6	#8	15-3	6	#8	15-9	6	#8	16-6	6	#8	17-0
a7	A																6	#4	9-0	18	#4	9-6	26	#4	10-3	36	#4	10-9			
b1	str	4	#4	15-3	4	#4	16-0	4	#4	17-0	4	#4	18-0	4	#4	19-0	4	#4	19-6	4	#4	20-6	4	#4	21-3	4	#4	22-0	4	#4	22-9
b2	str	20	#4	15-3	24	#4	16-0	24	#4	17-0	24	#4	18-0	28	#4	18-9	28	#4	19-6	28	#4	20-3	24	#4	21-0	32	#4	21-9	32	#4	22-6
b3	str	4	#4	14-0	4	#4	5-0	4	#4	10-0	4	#4	14-6	4	#4	6-0	4	#4	10-3	4	#4	14-3	4	#4	19-0	4	#4	10-3	4	#4	15-3
b4	str																						4	#4	8-3				4	#4	2-6
b5	str																														
c	str	4	#4	10-6	4	#4	11-0	4	#4	11-6	4	#4	12-0	4	#4	12-6	4	#4	13-0	4	#4	13-6	4	#4	14-0	4	#4	14-6	4	#4	15-0
d	A	6	#6	12-3	6	#7	12-9	6	#7	13-3	6	#7	13-9	6	#8	14-3	6	#8	14-9	6	#8	15-3	6	#8	15-9	6	#8	16-3	6	#8	16-9
e1	str	12	#4	3-6	10	#4	3-9	10	#4	3-9	10	#4	4-0	10	#5	4-3	12	#5	4-6	12	#5	4-9	12	#6	5-0	12	#6	5-0	12	#6	5-3
e2	str	10	#4	3-9	8	#4	4-0	10	#4	4-0	10	#5	4-3	10	#5	4-6	10	#5	4-9	10	#6	5-0	12	#6	5-3	12	#6	5-3	12	#7	5-6
e3	str	10	#4	4-0	8	#5	4-3	8	#5	4-6	10	#5	4-6	10	#5	4-9	10	#6	5-0	10	#6	5-3	10	#6	5-6	12	#7	5-9	12	#7	6-0
e4	str				8	#5	4-6	8	#5	4-9	8	#5	4-9	10	#6	5-0	10	#6	5-3	10	#7	5-6	10	#7	5-9	12	#7	6-0	12	#8	6-3
e5	str																														
e6	str																														
e7	str	4	#4	4-0	4	#5	4-6	4	#5	4-9	4	#5	4-9	4	#6	5-0	4	#6	5-3	6	#7	5-6	6	#7	5-9	8	#7	6-0	8	#8	6-3
e8	str	10	#4	4-0	10	#5	4-6	11	#5	4-9	11	#5	4-9	12	#6	5-0	12	#6	5-3	13	#7	5-6	13	#7	5-9	14	#7	6-0	14	#8	6-3
f1	str	8	#4	8-9	8	#4	9-3	8	#4	9-6	8	#4	10-0	8	#4	10-6	8	#4	10-9	8	#4	11-3	8	#4	11-9	8	#4	12-0	8	#4	12-6
f2	str	8	#4	9-6	8	#4	10-3	8	#4	10-3	6	#4	10-9	6	#4	11-3	8	#4	11-6	8	#4	12-0	8	#4	12-6	8	#4	12-9	8	#4	13-3
f3	str	6	#4	10-3	6	#4	11-0	8	#4	11-0	6	#4	11-3	6	#4	11-9	6	#4	12-3	6	#4	12-9	8	#4	13-0	8	#4	13-6	8	#4	14-0
f4	str										6	#4	11-9	6	#4	12-3	6	#4	12-9	6	#4	13-3	6	#4	13-9	6	#4	14-3	8	#4	14-6
g	str	2	#4	15-3	2	#4	16-0	2	#4	17-0	2	#4	18-0	2	#4	18-9	2	#4	19-6	2	#4	20-3	2	#4	21-0	2	#4	21-9	2	#4	22-6
u	B	7	#4	4-6	7	#4	4-9	8	#4	4-9	8	#4	4-9	8	#4	4-9	8	#4	5-0	9	#4	5-0	9	#4	5-0	9	#4	5-0	10	#4	5-0
j	str	2	#4	9-3	2	#4	9-6	2	#4	10-0	2	#4	10-6	2	#4	11-0	2	#4	11-3	2	#4	11-9	2	#4	12-3	2	#4	12-9	2	#4	13-3
m	str	8	#4	18-0	8	#4	18-9	8	#4	19-9	8	#4	21-0	10	#4	21-9	10	#4	22-6	10	#4	23-6	10	#4	24-3	10	#4	25-3	10	#4	26-0
n	str	5	#4	12-9	5	#4	13-6	5	#4	14-0	5	#4	14-6	5	#4	15-3	5	#4	16-0	5	#4	16-6	5	#4	17-3	5	#4	18-0	5	#4	18-9
p	str	4	#5	10-0	4	#5	10-6	4	#5	11-0	4	#5	11-6	4	#5	12-0	4	#5	12-6	4	#5	13-0	4	#5	13-6	4	#5	14-0	4	#5	14-6
q	str	2	#6	12-0	2	#6	12-6	2	#6	13-0	2	#6	13-6	2	#6	14-0	2	#6	14-6	2	#6	15-0	2	#6	15-6	2	#6	16-0	2	#6	16-6

STEEL LIST - OUTLET END

Mark	Bend	90" Dia			96" Dia			102" Dia			108" Dia			114" Dia			120" Dia			126" Dia			132" Dia			138" Dia			144" Dia		
		No	Size	Lgth	No	Size	Lgth	No	Size	Lgth	No	Size	Lgth	No	Size	Lgth	No	Size	Lgth	No	Size	Lgth	No	Size	Lgth	No	Size	Lgth	No	Size	Lgth
a1	A	8	#5	10-3	8	#5	10-9	8	#5	11-0	8	#6	11-3	8	#6	11-9	8	#6	12-0	8	#7	12-6	8	#7	13-0	10	#7	13-9	10	#8	14-0
a2	A	8	#5	11-0	8	#6	11-6	8	#6	11-9	8	#6	12-0	8	#6	12-6	8	#7	12-9	8	#7	13-3	8	#8	13-9	8	#8	14-6	10	#8	15-0
a3	A	8	#6	11-9	8	#6	12-0	6	#6	12-3	6	#7	12-6	8	#7	13-0	8	#7	13-6	8	#8	13-9	8	#8	14-3	8	#8	15-0	8	#8	15-9
a4	A	6	#6	12-3	8	#6	12-6	6	#7	12-9	6	#7	13-0	6	#7	13-6	8	#8	14-0	8	#8	14-6	8	#8	15-0	8	#8	15-9	8	#8	16-6
a5	A							6	#7	13-0	6	#7	13-6	6	#8	14-0	6	#8	14-6	8	#8	15-0	8	#8	15-6	8	#8	16-3	8	#8	17-0
a6	A																														
a7	A																														
b1	str	4	#4	14-3	4	#4	15-3	4	#4	16-0	4	#4	16-9	4	#4	17-6	4	#4	18-3	8	#4	9-0	16	#4	9-6	20	#4	10-3	24	#4	10-9
b2	str	20	#4	14-3	20	#4	15-0	24	#4	15-9	24	#4	16-6	24	#4	17-3	24	#4	18-0	4	#4	19-0	4	#4	19-9	4	#4	20-6	4	#4	21-3
b3	str	4	#4	8-6	4	#4	13-6	4	#4	6-3	4	#4	10-9	4	#4	13-3	4	#4	16-9	28	#4	18-9	28	#4	19-6	28	#4	20-3	28	#4	21-0
b4	str				4	#4	4-3							4	#4	4-3	4	#4	7-6	4	#4	10-9	4	#4	14-0	4	#4	16-6	4	#4	20-6
b5	str																						4	#4	4-3	4	#4	7-3	4	#4	10-9
b6	str																														
c	str	4	#4	10-6	4	#4	11-0	4	#4	11-6	4	#4	12-0	4	#4	12-6	4	#4	13-0	4	#4	13-6	4	#4	14-0	4	#4	14-6	4	#4	15-0
d	A	6	#6	12-3	6	#6	12-9	6	#7	13-3	6	#7	13-9	6	#8	14-6	6	#8	15-0	6	#8	15-6	6	#8	16-0	6	#8	16-6	6	#8	17-0
e1	str	8	#4	3-6	8	#4	3-9	8	#4	3-9	8	#4	3-9	8	#4	4-0	8	#5	4-3	8	#5	4-3	10	#5	4-6	10	#5	4-6	10	#6	4-9
e2	str	8	#4	3-9	8	#4	4-0	8	#4	4-0	8	#4	4-0	8	#5	4-3	8	#5	4-6	8	#5	4-6	8	#6	4-9	8	#6	5-0	10	#6	5-0
e3	str	8	#4	4-0	8	#4	4-3	6	#4	4-3	8	#5	4-3	8	#5	4-6	8	#5	4-9	8	#6	4-9	8	#6	5-3	8	#6	5-3	8	#7	5-3
e4	str	6	#4	4-3	8	#5	4-6	6	#5	4-3	6	#5	4-6	6	#5	4-9	8	#6	5-0	8	#6	5-3	8	#6	5-6	8	#7	5-6	8	#7	5-9
e5	str							6	#5	4-6	6	#5	4-9	6	#6	5-0	6	#6	5-3	8	#7	5-6	8	#7	5-9	8	#7	6-0	8	#8	6-3
e6	str																														
e7	str	4	#4	4-3	4	#5	4-6	4	#5	4-6	4	#5	4-9	6	#6	5-0	6	#6	5-3	6	#7	5-6	6	#7	5-9	8	#7	6-0	8	#8	6-3
e8	str	10	#4	4-3	10	#5	4-6	11	#5	4-6	11	#5	4-9	12	#6	5-0	12	#6	5-3	13	#7	5-6	13	#7	5-9	14	#7	6-0	14	#8	6-3
f1	str	8	#4	8-6	8	#4	9-0	8	#4	9-3	6	#4	9-6	6	#4	10-0	8	#4	10-3	8	#4	10-9	8	#4	11-0	8	#4	11-6	8	#4	12-0
f2	str	6	#4	9-3	8	#4	9-9	8	#4	10-3	6	#4	10-3	6	#4	10-6	6	#4	11-3	6	#4	11-9	8	#4	12-0	8	#4	12-6	8	#4	12-9
f3	str	6	#4	10-0	6	#4	10-9	6	#4	11-0	6	#4	11-0	6	#4	11-3	6	#4	12-0	6	#4	12-6	6	#4	13-0	6	#4	13-3	8	#4	13-9
f4	str										6	#4	11-6	6	#4	12-0	6	#4	12-9	6	#4	13-0	6	#4	13-9	6	#4	14-0	6	#4	14-6
u	B	6	#4	4-6	6	#4	4-9	7	#4	4-9	7	#4	4-9	7	#4	4-9	8	#4	5-0	8	#4	5-0	8	#4	5-0	8	#4	5-0	9	#4	5-0
m	str	8	#4	17-9	8	#4	18-9	8	#4	19-9	8	#4	20-6	8	#4	21-6	10	#4	22-3	10	#4	23-3	10	#4	24-3	10	#4	25-0	10	#4	25-9
n	str	5	#4	15-0	5	#4	15-9	5	#4	16-6	5	#4	17-3	5	#4	18-0	5	#4	18-9	5	#4	19-6	5	#4	20-3	5	#4	21-0	5	#4	21-9
p	str	4	#5	10-0	4	#5	10-6	4	#5	11-0	4	#5	11-6	4	#5	12-0	4	#5	12-6	4	#5	13-0	4	#5	13-6	4	#5	14-0	4	#5	14-6
q	str	2	#6	12-0	2	#6	12-6	2	#6	13-0	2	#6	13-6	2	#6	14-0	2	#6	14-6	2	#6	15-0	2	#6	15-6	2	#6	16-0	2	#6	16-6
v	str	2	#4	8-6	2	#4	9-0	2	#4	9-3	2	#4	9-9	2	#4	10-3	2	#4	10-9	2	#4	11-3	2	#4	11-9	2	#4	12-0	2	#4	12-6
w	str	2	#4	14-9	2	#4	15-6	2	#4	16-3	2	#4	16-9	2	#4	17-6	2	#4	18-3	2	#4	19-0	2	#4	19-9	2	#4	20-6	2	#4	21-3

DIMENSIONS INLET END

Pipe Dia	A	B	C	D	E	F	G	H	J	K	L	M	N
90"	5-2	2-0	2-6	0-7	5-1	15-3	4-11	9-6	7-8	17-11 1/4	6-7 1/4	4-6	0-4 1/2
96"	5-5	2-2	2-7	0-7	5-4	16-0	5-2	10-0	8-1	18-8 3/4	6-10 3/4	4-8 1/4	0-3
102"	5-8	2-2	2-8	0-9	5-7	17-0	5-5	10-6	8-6	19-10	7-3	4-11 1/4	0-3
108"	5-11	2-2	2-11	0-9	5-10	18-0	5-8	11-0	8-11	20-11 1/8	7-7 1/4	5-2 1/4	0-3
114"	6-2	2-3	2-11	0-11	6-1	18-9	5-11	11-6	9-4	21-9	7-11	5-4 3/4	0-1 1/2
120"	6-5	2-4	3-1	0-11	6-4	19-6	6-2	12-0	9-9	22-6 7/8	8-2 7/8	5-7 3/8	0-6
126"	6-10 3/4	2-6	3-1	1-0	6-7	20-3	6-5	12-6	10-2	23-5	8-7 1/8	5-10 3/8	0-4 1/2
132"	7-1 3/4	2-6	3-4	1-0	6-10	21-0	6-8	13-0	10-7	24-3 3/8	8-11 3/8	6-1 3/8	0-3
138"	7-4 3/4	2-7	3-5	1-1	7-1	21-9	6-11	13-6	11-0	25-1 1/4	9-3 1/8	6-4	0-1 1/2
144"	7-7 3/4	2-8	3-7	1-1	7-4	22-6	7-2	14-0	11-5	25-11	9-7	6-6 1/2	0-6

DIMENSIONS OUTLET END

Pipe Dia	A	B	C	D	E	F	G	H	J	K	L	M	N
90"	5-6 5/8	2-1	2-6	0-6	5-1	14-3	4-11	9-6	7-3	18-0 5/8	7-8 5/8	4-1 7/8	0-4 1/2
96"	5-9 5/8	2-2	2-7	0-7	5-4	15-0	5-2	10-0	7-8	18-11	8-1	4-4 1/4	0-3
102"	6-0 5/8	2-2	2-8	0-9	5-7	15-9	5-5	10-6	8-0	19-10 1/8	8-6 1/8	4-7 1/4	0-1 1/2
108"	6-3 5/8	2-3	2-9	0-10	5-10	16-6	5-8	11-0	8-5	20-8 1/2	8-10 1/2	4-9 1/2	0-6
114"	6-6 5/8	2-3	2-10	1-0	6-1	17-3	5-11	11-6	8-9	21-7 5/8	9-3 5/8	5-0 1/2	0-4 1/2
120"	6-9 5/8	2-4	3-0	1-0	6-4	18-0	6-2	12-0	9-2	22-6	9-8	5-2 3/4	0-3
126"	7-2 3/4	2-6	2-11	1-2	6-7	18-9	6-5	12-6	9-7	23-5 1/8	10-1 1/8	5-5 3/4	0-1 1/2
132"	7-5 3/4	2-6	3-0	1-4	6-10	19-6	6-8	13-0	10-0	24-4 1/4	10-6 1/4	5-8 3/4	0-6
138"	7-8 3/4	2-7	3-2	1-4	7-1	20-3	6-11	13-6	10-4	25-2 5/8	10-10 5/8	5-11 1/8	0-4 1/2
144"	7-11 3/4	2/8	3-4	1-4	7-4	21-0	7-2	14-0	10-9	26-1	11-3	6-1 3/8	0-3

QUANTITIES

Pipe Dia.	Inlet Reinf. (lbs)	Inlet Conc. (CY)	Outlet Reinf. (lbs)	Outlet Conc. (CY)
90"	1455	25.92	1365	25.26
96"	1810	28.34	1590	27.68
102"	1935	31.13	1840	30.05
108"	2215	34.21	2050	32.63
114"	2705	36.84	2395	35.27
120"	2990	39.76	2785	38.12
126"	3395	46.47	3275	44.48
132"	3835	49.94	3700	47.74
138"	4335	53.37	3850	51.13
144"	4760	57.01	4460	54.70

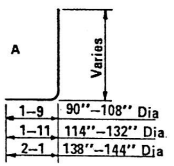

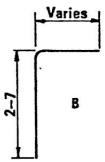

BENDS

NOTE:
Quantities and steel list shown are for one headwall.

DESIGN APPROVED	ARIZONA DEPARTMENT OF TRANSPORTATION HIGHWAYS DIVISION STANDARD DRAWINGS	REVISION
APPROVED FOR DISTRIBUTION	INLET AND OUTLET HEADWALLS RIGHT ANGLE PIPE CULVERT 6:1 SLOPE	STANDARD NO B-12.50

DESIGN	K W	9-72
DRAWN	LAM	9-72
CHECKED	R.L.C	9-72

DESIGN	K.W.	9-72	NO.	DESCRIPTION OF REVISIONS	MADE BY	DATE
DRAWN	G.H.	9-72	1	Revised ℄ of pipe.	WSK:sed	2-11-75
CHECKED	H.L.C.	9-72	2	Wall Thicknesses	G.H.	7-14-76
			3			

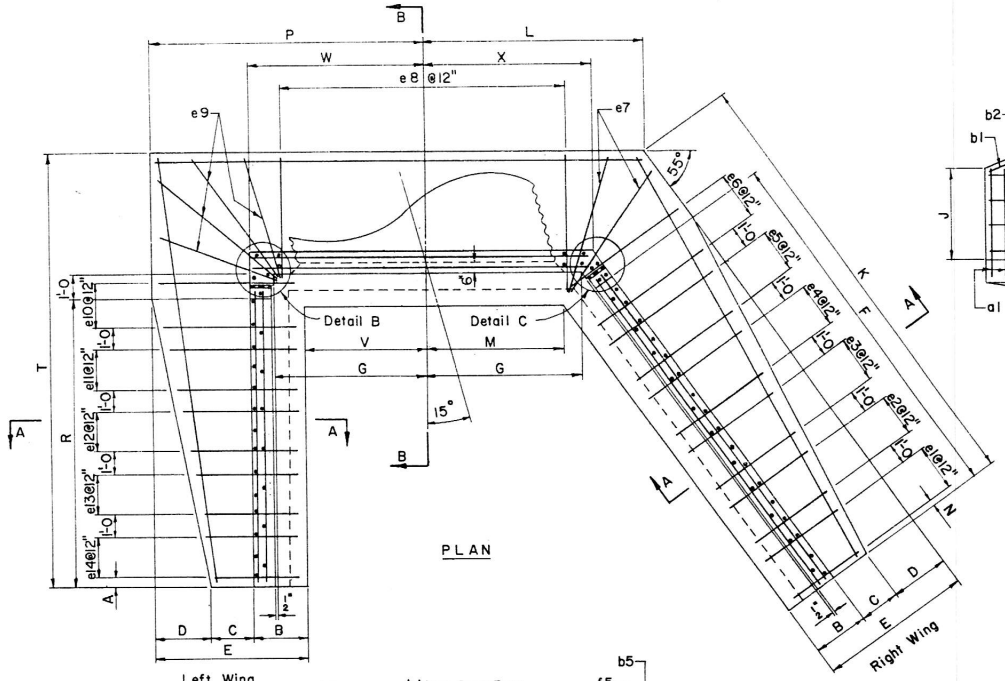

PLAN

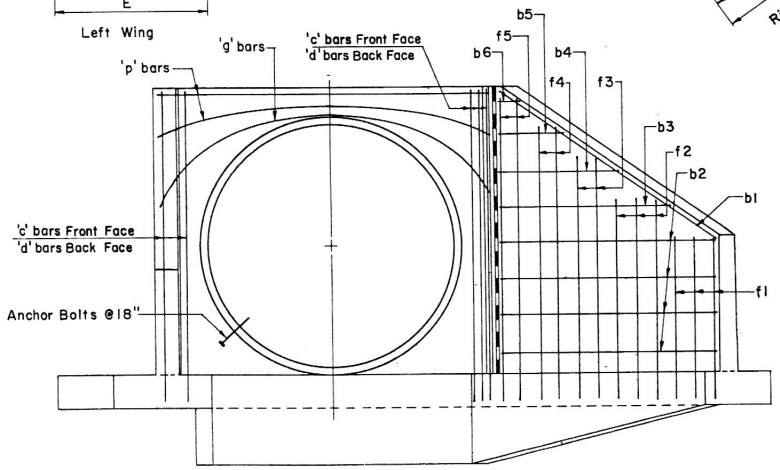

ELEVATION

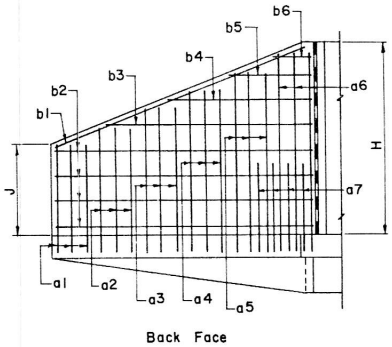

RIGHT WING ELEVATION

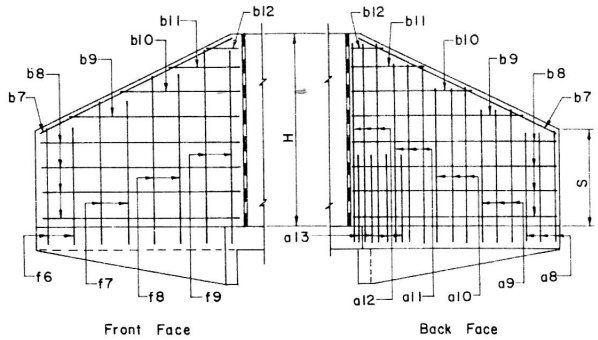

LEFT WING ELEVATION

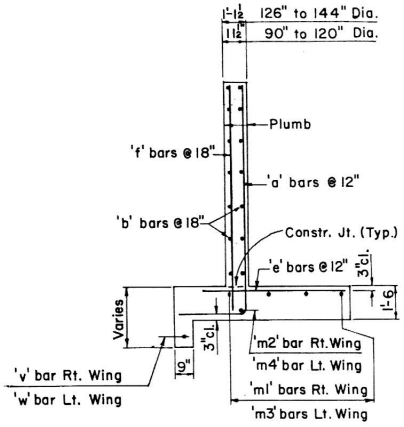

SECTION A-A

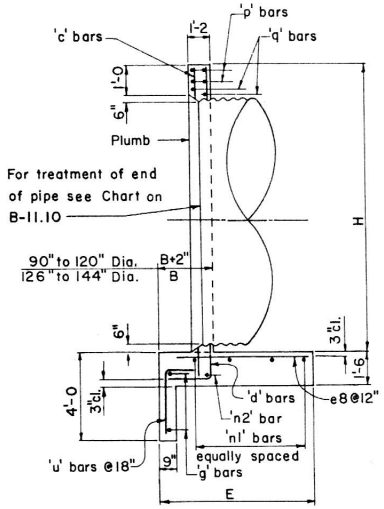

SECTION B-B

Notes: For General Notes and Misc. Details see B-11.10.
For steel list and bend diagrams see B-13.20, B-13.30 or B-13.40.

DESIGN APPROVED	ARIZONA DEPARTMENT OF TRANSPORTATION HIGHWAYS DIVISION STANDARD DRAWINGS	REVISION
APPROVED FOR DISTRIBUTION	INLET & OUTLET HEADWALLS 15° SKEW PIPE CULVERT	STANDARD NO. B-13.10

STEEL LIST

Mark	Bend	90" Dia			96" Dia			102" Dia			108" Dia			114" Dia			120" Dia			126" Dia			132" Dia			138" Dia			144" Dia		
		No	Size	Lgth	No	Size	Lgth	No	Size	Lgth	No	Size	Lgth	No	Size	Lgth	No	Size	Lgth	No	Size	Lgth	No	Size	Lgth	No	Size	Lgth	No	Size	Lgth
a1	A	3	#4	7-6	3	#4	7-9	3	#4	8-0	3	#4	8-3	3	#4	8-6	3	#4	9-0	3	#4	9-3	3	#4	9-6	3	#5	9-9	4	#5	10-0
a2	A	3	#4	8-9	3	#4	9-0	3	#4	9-3	3	#5	9-6	3	#5	9-9	3	#5	10-3	3	#5	10-6	3	#5	10-9	3	#6	11-0	3	#6	11-9
a3	A	3	#5	10-0	3	#5	10-3	3	#5	10-6	3	#6	10-9	3	#6	11-3	3	#6	11-6	3	#6	11-9	3	#6	12-0	3	#7	12-3	3	#7	13-0
a4	A	2	#5	11-3	2	#6	11-3	3	#6	11-9	3	#7	12-0	2	#7	12-3	3	#7	12-9	3	#7	12-9	3	#7	13-0	3	#8	13-6	3	#8	14-3
a5	A	2	#6	12-0	2	#7	12-6	2	#7	13-0	3	#8	13-3	2	#7	13-3	2	#8	13-9	3	#8	14-0	3	#8	14-3	3	#8	14-9	3	#8	15-6
a6	A													2	#8	14-3	2	#8	14-9	2	#8	15-3	2	#8	15-6	3	#8	16-0	3	#8	16-9
a7	A																			2	#4	6-0	3	#4	7-0	5	#4	7-0	3	#4	7-0
a8	A	3	#4	7-9	3	#4	8-0	3	#4	8-3	3	#4	8-6	3	#4	9-0	3	#4	9-3	3	#4	9-6	3	#5	9-9	3	#5	10-0	5	#5	10-3
a9	A	3	#5	9-3	3	#5	9-6	3	#5	9-9	3	#5	10-0	3	#5	10-6	3	#6	10-9	3	#6	11-0	3	#6	11-3	3	#6	11-6	3	#6	11-9
a10	A	2	#6	10-9	3	#6	11-0	3	#6	11-3	3	#6	11-6	2	#6	12-0	3	#7	12-3	3	#7	12-6	3	#7	12-9	3	#7	13-0	3	#8	13-3
a11	A	2	#6	11-9	2	#7	12-3	2	#7	12-9	3	#7	13-0	2	#7	13-3	2	#7	13-6	2	#7	13-9	3	#8	14-3	3	#8	14-9	3	#8	15-0
a12	A													2	#7	14-3	2	#7	14-9	2	#7	15-3	2	#8	15-6	2	#8	16-0	3	#8	16-6
a13	A													3	#4	6-0	4	#4	6-0	4	#4	6-0	4	#4	7-0	4	#4	7-0	8	#4	7-0
b1	str	2	#4	12-6	2	#4	13-0	2	#4	14-0	2	#4	14-6	2	#4	15-0	2	#4	16-0	2	#4	16-9	2	#4	17-3	2	#4	18-0	2	#4	18-9
b2	str	6	#4	12-0	8	#4	12-6	8	#4	13-6	8	#4	14-0	8	#4	14-9	8	#4	15-3	8	#4	16-0	8	#4	16-9	10	#4	17-6	10	#4	18-0
b3	str	2	#4	11-6	2	#4	9-3	2	#4	10-6	2	#4	11-6	2	#4	12-9	2	#4	14-0	2	#4	15-6	2	#4	16-6	2	#4	14-0	2	#4	15-3
b4	str	2	#4	8-0	2	#4	5-6	2	#4	6-9	2	#4	7-9	2	#4	9-0	2	#4	10-3	2	#4	11-6	2	#4	12-6	2	#4	10-6	2	#4	11-6
b5	str	2	#4	4-3	2	#4	2-0	2	#4	3-0	2	#4	4-3	2	#4	5-3	2	#4	6-6	2	#4	7-9	2	#4	9-0	2	#4	6-9	2	#4	7-9
b6	str																2	#4	3-0	2	#4	4-3	2	#4	5-3	2	#4	3-0	2	#4	4-3
b7	str	2	#4	10-3	2	#4	10-9	2	#4	11-3	2	#4	11-9	2	#4	12-3	2	#4	12-9	2	#4	13-3	2	#4	14-0	2	#4	14-6	2	#4	15-0
b8	str	8	#4	9-6	8	#4	10-0	8	#4	10-6	8	#4	11-0	8	#4	11-6	8	#4	12-0	10	#4	12-6	10	#4	13-0	10	#4	13-6	10	#4	14-0
b9	str	2	#4	6-6	2	#4	7-6	2	#4	8-6	2	#4	9-6	2	#4	10-6	2	#4	11-6	2	#4	9-6	2	#4	10-6	2	#4	11-3	2	#4	12-3
b10	str	2	#4	3-6	2	#4	4-6	2	#4	5-6	2	#4	6-6	2	#4	7-6	2	#4	8-6	2	#4	6-6	2	#4	7-6	2	#4	8-3	2	#4	9-3
b11	str				2	#4	1-6	2	#4	2-6	2	#4	3-6	2	#4	4-6	2	#4	5-6	2	#4	3-3	2	#4	4-6	2	#4	5-3	2	#4	6-6
b12	str													2	#4	1-6	2	#4	2-3				2	#4	1-3	2	#4	2-3	2	#4	3-6
c	str	5	#4	10-6	5	#4	11-0	5	#4	11-6	5	#4	12-0	5	#4	12-6	5	#4	13-0	5	#4	13-6	5	#4	14-0	5	#4	14-6	5	#4	15-0
d	A	6	#6	12-3	6	#6	12-9	6	#7	13-3	6	#7	13-9	6	#7	14-6	6	#7	15-0	6	#7	15-6	6	#7	16-0	6	#7	16-6	6	#7	17-0
e1	str	3	#4	2-3	3	#4	2-3	3	#4	2-6	3	#4	2-9	3	#4	2-9	3	#4	2-9	3	#4	2-9	3	#4	2-9	3	#4	3-0	4	#4	3-0
e2	str	3	#4	2-9	3	#4	2-9	3	#4	3-0	3	#4	3-0	3	#4	3-3	3	#4	3-3	3	#4	3-3	3	#5	3-6	3	#5	3-6	3	#5	3-9
e3	str	3	#4	3-3	3	#4	3-3	3	#5	3-6	3	#5	3-6	3	#5	3-9	3	#5	3-9	3	#5	4-0	3	#5	4-0	3	#6	4-0	3	#6	4-3
e4	str	2	#5	3-6	3	#5	3-9	3	#6	3-9	3	#6	4-0	3	#6	4-3	3	#6	4-3	3	#6	4-6	3	#6	4-6	3	#7	4-6	3	#7	4-9
e5	str	2	#5	3-9	2	#6	4-0	2	#6	4-3	3	#7	4-6	2	#7	4-6	2	#7	4-9	3	#7	5-0	3	#7	5-0	3	#7	5-0	3	#8	5-3
e6	str													2	#7	5-0	2	#7	5-3	2	#8	5-6	3	#8	5-6	3	#8	5-9	3	#8	5-9
e7	str	2	#5	4-3	2	#6	4-6	2	#6	4-9	2	#7	5-3	2	#7	5-6	2	#7	5-9	2	#8	6-0	2	#8	6-3	2	#8	6-6	2	#8	6-6
e8	str	10	#5	4-3	11	#6	4-6	11	#6	4-9	12	#7	5-3	12	#7	5-6	13	#7	5-9	13	#8	6-0	14	#8	6-3	14	#8	6-6	15	#8	6-6
e9	str	4	#5	4-3	4	#6	4-6	4	#6	4-9	4	#7	5-3	4	#7	5-6	4	#7	5-9	4	#8	6-0	4	#8	6-3	4	#8	6-6	4	#8	6-6
e10	str	2	#4	4-3	2	#5	4-6	3	#5	4-9	3	#5	4-6	2	#6	5-3	2	#6	5-6	2	#7	5-9	2	#7	6-0	3	#7	6-3	3	#8	6-6
e11	str	3	#4	3-6	3	#4	3-9	3	#4	4-0	3	#5	4-0	2	#5	4-9	2	#6	5-0	3	#6	5-0	3	#6	5-3	3	#7	5-6	3	#7	5-9
e12	str	3	#4	3-0	3	#4	3-0	3	#4	3-3	3	#4	3-3	3	#5	4-0	3	#5	4-3	3	#5	4-3	3	#5	4-6	3	#5	4-6	3	#6	4-9
e13	str	3	#4	2-3	3	#4	2-3	3	#4	2-6	3	#4	2-9	3	#4	3-3	3	#4	3-6	3	#4	3-6	3	#4	3-9	3	#4	3-9	3	#5	4-0
e14	str													3	#4	2-6	3	#4	2-9	3	#4	2-9	3	#4	3-0	3	#4	3-0	3	#4	3-6
f1	str	3	#4	5-9	3	#4	6-0	3	#4	6-3	3	#4	6-6	3	#4	6-9	3	#4	7-0	3	#4	7-0	3	#4	7-3	3	#4	7-6	4	#4	7-9
f2	str	2	#4	7-9	2	#4	8-0	3	#4	8-0	3	#4	8-6	3	#4	8-6	3	#4	9-0	3	#4	9-0	3	#4	9-3	3	#4	9-9	3	#4	10-3
f3	str	2	#4	9-0	2	#4	9-3	2	#4	10-0	2	#4	10-3	3	#4	10-3	3	#4	10-9	3	#4	10-9	3	#4	11-3	3	#4	11-6	3	#4	12-3
f4	str	2	#4	10-0	2	#4	10-6	2	#4	11-3	2	#4	11-6	2	#4	12-3	2	#4	12-6	3	#4	12-6	3	#4	13-0	3	#4	13-3	3	#4	14-0
f5	str																														
f6	str	3	#4	6-0	3	#4	6-3	3	#4	6-6	3	#4	6-9	3	#4	7-0	3	#4	7-3	3	#4	7-6	3	#4	7-9	3	#4	8-0	3	#4	8-3
f7	str	2	#4	8-3	3	#4	8-6	3	#4	8-9	3	#4	9-3	2	#4	9-3	2	#4	9-6	2	#4	10-0	3	#4	10-0	3	#4	10-3	3	#4	10-9
f8	str	2	#4	10-0	2	#4	10-9	2	#4	11-0	2	#4	11-6	2	#4	10-9	2	#4	11-0	2	#4	11-6	2	#4	12-3	2	#4	12-6	2	#4	13-0
f9	str													2	#4	12-3	2	#4	12-6	2	#4	13-0	2	#4	13-9	2	#4	14-0	2	#4	14-6
m1	str	3	#4	14-9	3	#4	15-6	3	#4	16-6	3	#4	17-0	4	#4	18-0	4	#4	18-9	4	#4	19-6	4	#4	20-3	4	#4	21-0	4	#4	21-9
m2	str	1	#4	14-9	1	#4	15-6	1	#4	16-6	1	#4	17-0	1	#4	18-0	1	#4	18-9	1	#4	19-6	1	#4	20-3	1	#4	21-0	1	#4	21-9
m3	str	3	#4	14-0	3	#4	14-9	3	#4	15-6	3	#4	16-3	4	#4	17-0	4	#4	17-6	4	#4	18-3	4	#4	19-0	4	#4	19-9	4	#4	20-6
m4	str	1	#4	14-0	1	#4	14-9	1	#4	15-6	1	#4	16-3	1	#4	17-0	1	#4	17-6	1	#4	18-3	1	#4	19-0	1	#4	19-9	1	#4	20-6
n1	str	3	#4	16-0	3	#4	16-9	3	#4	17-6	3	#4	18-3	4	#4	19-0	4	#4	19-9	4	#4	20-6	4	#4	21-3	4	#4	22-3	4	#4	23-3
n2	str	1	#4	16-0	1	#4	16-9	1	#4	17-6	1	#4	18-3	1	#4	19-0	1	#4	19-9	1	#4	20-6	1	#4	21-3	1	#4	22-3	1	#4	23-3
p	str	4	#5	11-0	4	#5	11-6	4	#5	12-0	4	#5	12-6	4	#5	13-0	4	#5	13-6	4	#5	14-0	4	#5	14-6	4	#5	15-0	4	#5	15-6
q	str	2	#6	13-0	2	#6	13-6	2	#6	14-0	2	#6	14-6	2	#6	15-0	2	#6	15-6	2	#6	16-0	2	#6	16-6	2	#6	17-0	2	#6	17-6
g	str	2	#4	9-0	2	#4	9-3	2	#4	9-9	2	#4	10-3	2	#4	10-9	2	#4	11-0	2	#4	11-6	2	#4	12-0	2	#4	12-6	2	#4	13-0
u	B	7	#4	4-6	7	#4	4-6	7	#4	4-6	8	#4	4-9	8	#4	4-9	8	#4	4-9	8	#4	4-9	9	#4	5-0	9	#4	5-0	9	#4	5-0
v	str	1	#4	12-9	1	#4	13-6	1	#4	14-3	1	#4	14-9	1	#4	15-6	1	#4	16-0	1	#4	16-9	1	#4	17-3	1	#4	18-0	1	#4	18-6
w	str	1	#4	9-6	1	#4	9-9	1	#4	10-3	1	#4	10-9	1	#4	11-3	1	#4	11-9	1	#4	12-3	1	#4	12-9	1	#4	13-3	1	#4	13-6

Pipe Dia	DIMENSIONS																		
	A	B	C	D	E	F	G	H	J	K	L	M	N	P	R	S	T	V	W	X
90"	0-6	2-1	1-2	1-10	5-1	12-0	5-1	9-6	4-7	15-1	7-2	4-6 1/4	0-3	9-1	9-6	4-9	14-6	4-0	6-1	5-5 7/8
96"	0-3	2-2	1-3	1-11	5-4	12-8	5-4	10-0	4-10	15-10	7-6	4-8 3/4	0-7	9-6	10-0	5-0	15-2	4-2	6-4	5-8 7/8
102"	0-6	2-2	1-4	2-1	5-7	13-4	5-7	10-6	5-1	16-7 5/8	7-10 5/8	4-11 3/4	0-5	10-0	10-6	5-3	15-11	4-5	6-7	5-11 7/8
108"	0-3	2-3	1-5	2-2	5-10	14-0	5-10	11-0	5-3	17-4 5/8	8-2 5/8	5-2	0-3	10-5	11-0	5-6	16-7	4-7	6-10	6-2 7/8
114"	0-6	2-3	1-7	2-3	6-1	14-8	6-1	11-6	5-6	18-2 1/4	8-7 1/4	5-5 1/4	0-7	10-11	11-6	5-9	17-4	4-10	7-1	6-5 7/8
120"	0-3	2-4	1-8	2-4	6-4	15-4	6-4	12-0	5-9	18-11 1/4	8-11 1/4	5-7 5/8	0-5	11-4	12-0	6-0	18-0	5-0	7-4	6-8 7/8
126"	0-6	2-6	1-7	2-6	6-7	16-0	6-7	12-6	6-0	19-8 3/4	9-3 7/8	5-10 5/8	0-3	11-10	12-6	6-3	18-9	5-3	7-9	7-2 1/4
132"	0-3	2-7	1-8	2-7	6-10	16-8	6-10	13-0	6-2	20-5 7/8	9-7 7/8	6-1 1/8	0-7	12-3	13-0	6-6	19-5	5-5	8-0	7-5 1/4
138"	0-6	2-7	1-10	2-8	7-1	17-4	7-1	13-6	6-5	21-3 3/8	10-0 3/8	6-4 1/8	0-5	12-9	13-6	6-9	20-2	5-8	8-3	7-8 1/4
144"	0-3	2-8	1-11	2-9	7-4	18-0	7-5	14-0	6-8	22-0 1/2	10-5 1/2	6-7 5/8	0-3	13-3	14-0	7-0	20-10	5-11	8-7	8-0 1/4

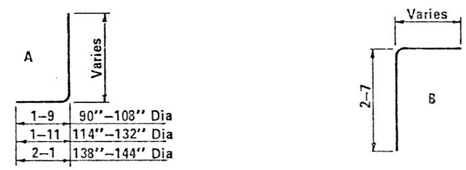

BENDS

QUANTITIES

Pipe Dia.	Reinf. (lbs)	Conc. (CY)
90"	1025	20.02
96"	1180	21.86
102"	1330	23.83
108"	1595	25.79
114"	1760	27.99
120"	1955	30.15
126"	2180	34.27
132"	2395	36.72
138"	2645	39.37
144"	2920	42.20

NOTE:

Quantities and steel list shown are for one headwall.

Registered ... Engineer (Civil)
CERTIFICATE EXPIRES
DEC. 31, 19
ARIZONA, U.S.A.

DESIGN APPROVED	ARIZONA DEPARTMENT OF TRANSPORTATION HIGHWAYS DIVISION STANDARD DRAWINGS	REVISION
APPROVED FOR DISTRIBUTION	INLET AND OUTLET HEADWALLS 15° SKEW PIPE CULVERT 2:1 SLOPE	STANDARD NO B-13.20

DESIGN	KW	9-72	DRAWN	LAM	9-72	CHECKED	RLC	9-72

STEEL LIST

Mark	Bend	90" Dia			96" Dia			102" Dia			108" Dia			114" Dia			120" Dia			126" Dia			132" Dia			138" Dia			144" Dia		
		No	Size	Lgth	No	Size	Lgth	No	Size	Lgth	No	Size	Lgth	No	Size	Lgth	No	Size	Lgth	No	Size	Lgth	No	Size	Lgth	No	Size	Lgth	No	Size	Lgth
a1	A	4	#5	9-9	3	#5	10-3	4	#5	10-6	4	#5	10-9	4	#6	11-3	4	#6	11-9	4	#6	12-0	4	#6	12-6	4	#7	12-9	5	#7	13-3
a2	A	4	#5	10-9	3	#5	10-9	3	#6	11-3	4	#6	11-6	4	#6	12-0	4	#7	12-6	4	#7	12-9	4	#7	13-3	4	#8	13-9	4	#8	14-3
a3	A	3	#6	11-6	3	#6	11-3	3	#6	12-0	3	#6	12-3	3	#7	12-9	4	#7	13-3	4	#8	13-6	4	#8	14-0	4	#8	14-6	4	#8	15-0
a4	A	3	#6	12-3	3	#6	12-0	3	#7	12-6	3	#7	13-0	3	#7	13-6	3	#8	14-0	4	#8	14-6	4	#8	14-9	4	#8	15-3	4	#8	15-9
a5	A				3	#7	12-6	3	#7	13-0	2	#7	13-6	3	#8	14-0	3	#8	14-6	3	#8	15-0	3	#8	15-6	4	#8	16-0	4	#8	16-6
a6	A																														
a7	A																			3	#4	7-3	6	#4	7-9	8	#4	8-3	11	#4	8-6
a8	A	3	#4	9-0	3	#4	9-6	4	#5	9-9	4	#5	10-3	4	#6	10-9	4	#6	11-0	4	#6	11-3	4	#6	11-9	4	#6	12-0	4	#7	12-6
a9	A	3	#4	9-9	3	#5	10-3	3	#5	10-9	4	#6	11-3	4	#6	11-9	4	#6	12-0	4	#7	12-3	4	#7	12-6	4	#7	13-0	4	#7	13-6
a10	A	3	#5	10-6	3	#6	11-0	3	#6	11-6	3	#7	12-0	3	#7	12-6	4	#7	13-0	4	#8	13-3	4	#8	13-6	4	#8	14-0	4	#8	14-6
a11	A	3	#6	11-3	3	#6	11-9	3	#7	12-3	3	#7	12-9	3	#7	13-6	3	#8	14-0	3	#8	14-3	4	#8	14-6	4	#8	15-0	4	#8	15-6
a12	A	2	#6	12-0	3	#7	12-3	3	#7	12-9	2	#7	13-3	3	#8	14-0	2	#8	14-6	3	#8	15-0	3	#8	15-6	3	#8	16-0	4	#8	16-6
a13	A																			2	#4	7-0	6	#4	7-0	6	#4	7-3	7	#4	7-9
b1	str	2	#4	13-6	2	#4	14-3	2	#4	15-0	2	#4	15-9	2	#4	16-6	2	#4	17-3	2	#4	18-0	2	#4	18-9	2	#4	19-6	2	#4	20-3
b2	str	10	#4	13-3	10	#4	14-0	10	#4	14-9	12	#4	15-6	12	#4	16-3	12	#4	17-0	12	#4	17-9	14	#4	18-6	14	#4	19-3	14	#4	20-0
b3	str	2	#4	8-0	2	#4	10-9	2	#4	13-0	2	#4	8-0	2	#4	10-6	2	#4	12-9	2	#4	15-3	2	#4	10-9	2	#4	12-9	2	#4	15-3
b4	str				2	#4	3-0	2	#4	5-9				2	#4	3-3	2	#4	5-6	2	#4	8-0	2	#4	3-3	2	#4	5-6	2	#4	7-9
b5	str																														
b6	str																														
b7	str	2	#4	13-6	2	#4	14-0	2	#4	14-9	2	#4	15-6	2	#4	16-0	2	#4	16-6	2	#4	17-3	2	#4	18-0	2	#4	18-6	2	#4	19-0
b8	str	8	#4	13-6	10	#4	14-0	10	#4	14-9	10	#4	15-6	10	#4	16-0	12	#4	16-6	12	#4	17-3	12	#4	18-0	12	#4	18-6	12	#4	19-0
b9	str	2	#4	12-9	2	#4	8-9	2	#4	10-9	2	#4	12-9	2	#4	14-6	2	#4	10-9	2	#4	12-6	2	#4	14-6	2	#4	16-6	2	#4	18-6
b10	str	2	#4	6-9	2	#4	2-9	2	#4	4-9	2	#4	6-9	2	#4	8-6	2	#4	4-9	2	#4	6-6	2	#4	8-9	2	#4	10-9	2	#4	12-6
b11	str													2	#4	2-9							2	#4	2-6	2	#4	4-6	2	#4	6-6
b12	str																														
c	str	5	#4	10-6	5	#4	11-0	5	#4	11-6	5	#4	12-0	5	#4	12-6	5	#4	13-0	5	#4	13-6	5	#4	14-0	5	#4	14-6	5	#4	15-0
d	A	6	#6	12-3	6	#6	12-9	6	#7	13-3	6	#7	13-9	6	#7	14-6	6	#7	15-0	6	#7	15-6	6	#7	16-0	6	#7	16-6	6	#7	17-0
e1	str	4	#4	3-0	3	#4	3-0	4	#4	3-3	4	#4	3-6	4	#4	3-9	4	#4	4-0	4	#4	4-0	4	#4	4-3	4	#4	4-6	5	#5	4-6
e2	str	4	#4	3-6	3	#4	3-6	3	#4	3-6	4	#4	3-9	4	#4	4-0	4	#4	4-3	4	#5	4-3	4	#5	4-6	4	#5	4-9	4	#6	5-0
e3	str	3	#4	3-9	3	#4	3-9	3	#4	4-0	3	#4	4-0	3	#5	4-3	4	#5	4-6	4	#5	4-9	4	#6	4-9	4	#6	5-0	4	#6	5-3
e4	str	3	#4	4-0	3	#4	4-0	3	#4	4-3	3	#5	4-6	3	#5	4-6	3	#6	4-9	4	#6	5-0	4	#6	5-3	4	#7	5-6	4	#7	5-9
e5	str				3	#5	4-3	3	#5	4-6	3	#5	4-9	3	#6	4-9	3	#6	5-0	3	#7	5-3	4	#7	5-6	4	#7	5-9	4	#8	6-0
e6	str																														
e7	str	2	#4	4-3	2	#5	4-6	2	#5	4-9	2	#5	5-0	2	#6	5-0	2	#6	5-3	2	#7	5-6	2	#7	5-9	2	#7	6-0	2	#8	6-3
e8	str	10	#4	4-3	11	#5	4-6	11	#5	4-9	12	#5	5-0	12	#6	5-0	13	#6	5-3	13	#7	5-6	14	#7	5-9	14	#7	6-0	15	#8	6-3
e9	str	4	#4	4-3	4	#5	4-6	4	#5	4-9	4	#5	5-0	4	#6	5-0	4	#6	5-3	4	#7	5-6	4	#7	5-9	4	#7	6-0	4	#8	6-3
e10	str	3	#4	4-0	3	#5	4-3	4	#5	4-6	3	#5	4-9	3	#6	4-9	3	#6	5-0	3	#7	5-3	3	#7	5-6	4	#7	5-9	4	#8	6-0
e11	str	3	#4	3-9	3	#4	4-0	4	#4	4-0	3	#5	4-6	3	#5	4-6	3	#6	4-9	3	#6	5-0	4	#6	5-3	4	#7	5-6	4	#7	5-9
e12	str	3	#4	3-6	3	#4	3-9	4	#4	3-9	3	#4	4-0	3	#4	4-3	4	#5	4-6	4	#5	4-9	4	#6	4-9	4	#6	5-0	4	#6	5-3
e13	str	3	#4	3-3	3	#4	3-6	4	#4	3-3	4	#4	3-9	4	#4	4-0	4	#4	4-3	4	#4	4-3	4	#5	4-6	4	#5	4-9	4	#5	5-0
e14	str	3	#4	3-0	3	#4	3-0				4	#4	3-6	4	#4	3-9	4	#4	4-0	4	#4	4-0	4	#4	4-3	4	#4	4-6	4	#4	4-6
f1	str	4	#4	7-9	4	#4	8-6	4	#4	8-9	4	#4	9-0	3	#4	9-3	3	#4	9-9	4	#4	10-0	4	#4	10-6	4	#4	10-9	4	#4	11-0
f2	str	3	#4	9-3	3	#4	9-9	4	#4	10-0	4	#4	10-3	3	#4	10-3	3	#4	10-9	3	#4	11-3	3	#4	11-9	4	#4	12-0	4	#4	12-3
f3	str	3	#4	10-0	3	#4	10-6	3	#4	11-0	3	#4	11-6	3	#4	11-3	3	#4	11-6	3	#4	12-3	3	#4	12-9	3	#4	13-3	3	#4	13-6
f4	str													3	#4	12-0	3	#4	12-6	3	#4	13-0	3	#4	13-6	3	#4	14-0	3	#4	14-6
f5	str																														
f6	str	4	#4	7-3	4	#4	7-9	4	#4	8-0	4	#4	8-6	3	#4	8-9	3	#4	9-0	3	#4	9-6	4	#4	9-9	4	#4	10-0	4	#4	10-6
f7	str	3	#4	8-9	3	#4	9-3	4	#4	9-6	4	#4	10-0	3	#4	9-9	3	#4	10-3	3	#4	10-6	3	#4	11-3	3	#4	11-6	4	#4	12-0
f8	str	3	#4	10-0	3	#4	10-6	3	#4	11-0	3	#4	11-6	3	#4	10-9	3	#4	11-3	3	#4	11-9	3	#4	12-3	3	#4	12-9	3	#4	13-6
f9	str													3	#4	12-0	3	#4	12-6	3	#4	12-9	3	#4	13-6	3	#4	13-9	3	#4	14-6
m1	str	3	#4	16-0	3	#4	16-9	3	#4	17-9	3	#4	18-6	3	#4	19-3	3	#4	20-3	3	#4	21-0	4	#4	22-0	4	#4	22-9	4	#4	23-9
m2	str	1	#4	16-0	1	#4	16-9	1	#4	17-9	1	#4	18-6	1	#4	19-3	1	#4	20-3	1	#4	21-0	1	#4	22-0	1	#4	22-9	1	#4	23-9
m3	str	3	#4	18-3	3	#4	18-9	3	#4	19-9	3	#4	20-9	3	#4	21-6	3	#4	22-3	3	#4	23-3	4	#4	24-0	4	#4	24-9	4	#4	25-6
m4	str	1	#4	18-3	1	#4	18-9	1	#4	19-9	1	#4	20-9	1	#4	21-6	1	#4	22-3	1	#4	23-3	1	#4	24-0	1	#4	24-9	1	#4	25-6
n1	str	3	#4	14-9	3	#4	15-6	3	#4	16-3	3	#4	17-0	3	#4	17-6	3	#4	18-3	3	#4	19-0	4	#4	19-9	4	#4	20-6	4	#4	21-3
n2	str	1	#4	14-9	1	#4	15-6	1	#4	16-3	1	#4	17-0	1	#4	17-6	1	#4	18-3	1	#4	19-0	1	#4	19-9	1	#4	20-6	1	#4	21-3
p	str	4	#5	11-0	4	#5	11-6	4	#5	12-0	4	#5	12-6	4	#5	13-0	4	#5	13-6	4	#5	14-0	4	#5	14-6	4	#5	15-0	4	#5	15-6
q	str	2	#6	13-0	2	#6	13-6	2	#6	15-0	2	#6	15-6	2	#6	15-0	2	#6	15-6	2	#6	16-0	2	#6	16-6	2	#6	17-0	2	#6	17-6
n	str	2	#4	9-3	2	#4	9-9	2	#4	10-0	2	#4	10-6	2	#4	11-0	2	#4	11-3	2	#4	11-9	2	#4	12-3	2	#4	12-9	2	#4	13-3
u	B	7	#4	4-6	7	#4	4-6	7	#4	4-6	8	#4	4-9	8	#4	4-9	8	#4	4-9	8	#4	4-9	9	#4	5-0	9	#4	5-0	9	#4	5-0
v	str	1	#4	14-0	1	#4	14-9	1	#4	15-6	1	#4	16-3	1	#4	17-0	1	#4	17-9	1	#4	18-6	1	#4	19-3	1	#4	20-0	1	#4	20-9
w	str	1	#4	13-6	1	#4	14-0	1	#4	14-6	1	#4	15-3	1	#4	15-9	1	#4	16-3	1	#4	17-0	1	#4	17-6	1	#4	18-0	1	#4	18-6

Pipe Dia	DIMENSIONS																		
	A	B	C	D	E	F	G	H	J	K	L	M	N	P	R	S	T	V	W	X
90"	0-6	2-1	2-0	1-0	5-1	13-3	5-1	9-6	6-9	16-4	7-2	4-6 1/4	0-4	9-1	13-6	6-2	18-6	4-0	6-1	5-5 7/8
96"	0-3	2-2	2-1	1-1	5-4	14-0	5-4	10-0	7-2	17-2	7-6	4-8 3/4	0-3	9-6	14-0	6-6	19-2	4-2	6-4	5-8 7/8
102"	0-1 1/2	2-2	2-3	1-2	5-7	14-9	5-7	10-6	7-6	18-0 5/8	7-10 5/8	4-11 3/4	0-2	10-0	14-9	6-10	20-2	4-5	6-7	5-11 7/8
108"	0-6	2-2	2-5	1-3	5-10	15-6	5-10	11-0	7-10	18-11 1/8	8-3 1/8	5-2 3/4	0-6	10-6	15-6	7-2	21-2	4-8	6-10	6-2 7/8
114"	0-3	2-3	2-6	1-4	6-1	16-3	6-1	11-6	8-2	19-9 1/4	8-7 1/4	5-5 1/4	0-4	10-11	16-0	7-6	21-10	4-10	7-1	6-5 7/8
120"	0-6	2-4	2-8	1-4	6-4	17-0	6-4	12-0	8-6	20-7 1/4	8-11 1/4	5-7 5/8	0-3	11-4	16-6	7-10	22-6	5-0	7-4	6-8 7/8
126"	0-4 1/2	2-6	2-8	1-5	6-7	17-9	6-7	12-6	8-10	21-5 3/4	9-3 7/8	5-10 5/8	0-2	11-10	17-3	8-2	23-6	5-3	7-9	7-2 1/4
132"	0-3	2-7	2-9	1-6	6-10	18-6	6-10	13-0	9-3	22-3 7/8	9-7 7/8	6-1 1/8	0-6	12-3	18-0	8-6	24-5	5-5	8-0	7-5 1/4
138"	0-6	2-7	2-11	1-7	7-1	19-3	7-1	13-6	9-7	23-2 3/8	10-0 3/8	6-4 1/8	0-4	12-9	18-6	8-10	25-2	5-8	8-3	7-8 1/4
144"	0-3	2-8	3-0	1-8	7-4	20-0	7-5	14-0	9-11	24-0 1/2	10-5 1/2	6-7 5/8	0-3	13-3	19-0	9-3	25-10	5-11	8-7	8-0 1/4

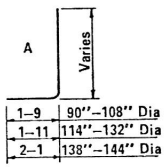

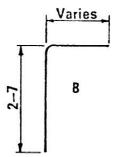

BENDS

QUANTITIES

Pipe Dia.	Reinf. (lbs)	Conc. (CY)
90"	1235	24.21
96"	1460	26.36
102"	1690	28.83
108"	1805	31.40
114"	2140	33.82
120"	2360	36.39
126"	2745	41.74
132"	3040	44.85
138"	3320	47.94
144"	3720	51.22

NOTE:

Quantities and steel list shown are for one headwall.

Registered Professional Engineer (Civil) CERTIFICATE EXPIRES

DESIGN	K W	9-72	DRAWN	L A M	9-72	CHECKED	R L C	9-72

DESIGN APPROVED	ARIZONA DEPARTMENT OF TRANSPORTATION HIGHWAYS DIVISION STANDARD DRAWINGS	REVISION
R C Buehler		
APPROVED FOR DISTRIBUTION	INLET AND OUTLET HEADWALLS 15° SKEW PIPE CULVERT 4:1 SLOPE	STANDARD NO. 8-13.30

STEEL LIST

Mark	Bend	90" Dia			96" Dia			102" Dia			108" Dia			114" Dia			120" Dia			126" Dia			132" Dia			138" Dia			144" Dia		
		No	Size	Lgth	No	Size	Lgth	No	Size	Lgth	No	Size	Lgth	No	Size	Lgth	No	Size	Lgth	No	Size	Lgth	No	Size	Lgth	No	Size	Lgth	No	Size	Lgth
a1	A	5	#5	10-0	5	#5	10-6	5	#6	11-0	4	#6	11-6	5	#6	12-0	5	#6	12-3	5	#7	12-6	5	#7	12-9	5	#8	13-3	6	#8	13-9
a2	A	4	#6	10-9	5	#6	11-3	5	#6	11-9	4	#6	12-0	4	#7	12-6	5	#7	13-0	5	#7	13-3	5	#8	13-9	5	#8	14-0	5	#8	14-6
a3	A	4	#6	11-6	4	#6	12-0	5	#7	12-3	4	#7	12-6	4	#7	13-3	4	#8	13-9	5	#8	14-0	5	#8	14-3	5	#8	14-9	5	#8	15-3
a4	A	4	#6	12-0	4	#7	12-6	4	#7	13-0	4	#7	13-0	4	#8	13-9	4	#8	14-3	4	#8	14-9	5	#8	15-0	5	#8	15-6	5	#8	16-0
a5	A										4	#8	13-6	4	#8	14-3	4	#8	14-9	4	#8	15-3	4	#8	15-9	5	#8	16-3	5	#8	16-9
a6	A																														
a7	A																			3	#4	6-3	8	#4	7-0	14	#4	7-6	19	#4	8-3
a8	A	4	#4	10-0	5	#4	10-6	5	#5	10-9	5	#5	11-0	5	#5	11-9	4	#6	12-0	5	#6	12-6	5	#7	12-9	5	#7	13-3	5	#7	13-9
a9	A	4	#5	10-6	4	#5	11-0	5	#5	11-6	5	#6	11-9	5	#6	12-6	4	#6	12-6	4	#7	13-0	4	#7	13-6	5	#7	14-0	5	#7	14-6
a10	A	4	#5	11-3	4	#6	11-9	4	#6	12-3	4	#7	12-9	5	#7	13-3	4	#7	13-3	4	#7	13-9	4	#7	14-3	4	#8	14-9	5	#8	15-3
a11	A	4	#6	12-0	4	#7	12-6	3	#7	13-0	4	#7	13-3	4	#7	14-0	4	#7	14-0	4	#8	14-6	4	#8	15-0	4	#8	15-6	4	#8	16-0
a12	A																4	#8	14-6	3	#8	15-0	4	#8	15-6	4	#8	16-3	4	#8	16-9
a13	A																									3	#4	8-0	7	#4	8-9
b1	str	2	#4	16-3	2	#4	17-3	2	#4	18-3	2	#4	19-3	2	#4	20-3	2	#4	21-3	2	#4	22-3	2	#4	23-3	2	#4	24-3	2	#4	25-3
b2	str	10	#4	16-0	10	#4	17-0	12	#4	18-0	12	#4	19-0	12	#4	20-0	12	#4	21-0	14	#4	22-0	14	#4	23-0	14	#4	24-0	14	#4	25-0
b3	str	2	#4	12-0	2	#4	16-9	2	#4	8-9	2	#4	12-9	2	#4	17-0	2	#4	19-3	2	#4	11-9	2	#4	15-0	2	#4	18-9	2	#4	23-0
b4	str				2	#4	4-9							2	#4	5-3	2	#4	8-0				2	#4	4-3	2	#4	9-3	2	#4	11-3
b5	str																														
b6	str																														
b7	str	2	#4	15-3	2	#4	16-0	2	#4	16-9	2	#4	17-6	2	#4	18-3	2	#4	19-0	2	#4	19-9	2	#4	20-6	2	#4	21-3	2	#4	22-0
b8	str	10	#4	15-0	10	#4	15-9	10	#4	16-6	12	#4	17-3	12	#4	18-0	12	#4	18-9	14	#4	19-6	14	#4	20-3	14	#4	21-0	14	#4	21-9
b9	str	2	#4	10-0	2	#4	13-0	2	#4	15-9	2	#4	9-9	2	#4	12-9	2	#4	16-0	2	#4	10-0	2	#4	12-9	2	#4	15-9	2	#4	19-0
b10	str				2	#4	3-9	2	#4	6-9				2	#4	4-0	2	#4	7-0				2	#4	3-6	2	#4	6-9	2	#4	9-9
b11	str																														
b12	str																														
c	str	5	#4	10-6	5	#4	11-0	5	#4	11-6	5	#4	12-0	5	#4	12-6	5	#4	13-0	5	#4	13-6	5	#4	14-0	5	#4	14-6	5	#4	15-0
d	A	6	#6	12-3	6	#6	12-9	6	#7	13-3	6	#7	13-9	6	#7	14-6	6	#7	15-0	6	#7	15-6	6	#7	16-0	6	#7	16-6	6	#7	17-0
e1	str	5	#4	3-6	5	#4	3-6	5	#4	3-9	4	#4	3-9	5	#4	4-0	5	#5	4-0	5	#5	4-3	5	#5	4-3	5	#6	4-6	6	#6	4-9
e2	str	4	#4	3-9	5	#4	3-9	5	#4	4-0	4	#4	4-0	4	#5	4-3	5	#5	4-3	5	#5	4-6	5	#6	4-9	5	#6	5-0	5	#6	5-3
e3	str	4	#4	4-0	4	#4	4-0	5	#5	4-3	4	#5	4-3	4	#5	4-6	4	#5	4-9	5	#6	4-9	5	#6	5-0	5	#6	5-3	5	#7	5-6
e4	str	4	#4	4-3	4	#5	4-3	4	#5	4-6	4	#5	4-6	4	#5	4-9	4	#6	5-0	4	#6	5-3	5	#6	5-6	5	#7	5-9	5	#7	6-0
e5	str										4	#5	4-9	4	#6	5-0	4	#6	5-3	4	#6	5-6	4	#7	5-9	5	#7	6-0	5	#8	6-3
e6	str																														
e7	str	2	#4	4-3	2	#5	4-6	2	#5	4-9	2	#5	5-0	2	#6	5-3	2	#6	5-6	2	#6	5-9	2	#7	6-0	2	#7	6-3	2	#8	6-6
e8	str	10	#4	4-3	11	#5	4-6	11	#5	4-9	12	#5	5-0	12	#6	5-3	13	#6	5-6	13	#6	5-9	14	#7	6-0	14	#7	6-3	14	#8	6-6
e9	str	3	#4	4-3	3	#5	4-6	3	#5	4-9	3	#5	5-0	4	#6	5-3	4	#6	5-6	4	#6	5-9	4	#7	6-0	4	#7	6-3	4	#8	6-6
e10	str	4	#4	4-3	4	#5	4-3	4	#5	4-6	4	#5	4-9	4	#6	5-0	4	#6	5-3	4	#6	5-6	4	#7	5-9	4	#7	6-0	4	#8	6-3
e11	str	4	#4	4-0	4	#5	4-0	4	#5	4-3	4	#5	4-6	5	#5	4-9	4	#6	5-0	4	#6	5-3	4	#6	5-6	4	#7	5-9	4	#7	6-0
e12	str	4	#4	3-9	4	#4	3-9	5	#4	4-0	5	#4	4-3	5	#5	4-6	4	#5	4-9	4	#6	4-9	4	#6	5-0	4	#6	5-3	5	#7	5-6
e13	str	4	#4	3-6	5	#4	3-6	5	#4	3-9	5	#4	3-9	5	#4	4-0	4	#5	4-3	4	#5	4-6	4	#5	4-9	5	#6	5-0	5	#6	5-3
e14	str																4	#5	4-0	5	#5	4-3	5	#5	4-3	5	#6	4-6	5	#6	4-9
f1	str	3	#4	8-6	3	#4	9-0	4	#4	9-3	4	#4	9-9	4	#4	10-0	4	#4	10-3	4	#4	10-6	4	#4	10-9	4	#4	11-3	4	#4	11-9
f2	str	3	#4	9-0	3	#4	9-6	3	#4	10-0	4	#4	10-6	4	#4	10-9	4	#4	11-0	4	#4	11-6	4	#4	11-9	4	#4	12-3	4	#4	12-6
f3	str	3	#4	9-9	3	#4	10-0	3	#4	10-9	3	#4	11-3	3	#4	11-9	4	#4	11-9	4	#4	12-0	4	#4	12-6	3	#4	13-0	4	#4	13-3
f4	str	3	#4	10-3	3	#4	10-9	3	#4	11-3	3	#4	11-9	3	#4	12-3	3	#4	12-9	4	#4	13-0	4	#4	13-6	3	#4	13-9	3	#4	14-3
f5	str																									3	#4	14-3	3	#4	14-9
f6	str	4	#4	8-3	4	#4	8-6	4	#4	9-0	4	#4	9-3	4	#4	9-9	4	#4	10-3	4	#4	10-6	4	#4	10-9	4	#4	11-3	4	#4	11-9
f7	str	4	#4	9-3	4	#4	9-6	4	#4	9-9	4	#4	10-3	3	#4	10-6	3	#4	11-0	4	#4	11-6	4	#4	11-9	4	#4	12-3	4	#4	12-6
f8	str	3	#4	10-3	3	#4	10-6	4	#4	10-9	4	#4	11-3	3	#4	11-3	3	#4	12-0	3	#4	12-6	3	#4	12-9	4	#4	13-3	4	#4	13-6
f9	str													3	#4	12-3	3	#4	12-6	3	#4	13-3	3	#4	13-6	3	#4	14-3	3	#4	14-6
m1	str	3	#4	18-9	3	#4	19-9	3	#4	21-3	3	#4	22-0	4	#4	23-3	4	#4	24-6	4	#4	25-6	4	#4	26-6	4	#4	27-9	4	#4	28-6
m2	str	1	#4	18-9	1	#4	19-9	1	#4	21-3	1	#4	22-0	1	#4	23-3	1	#4	24-6	1	#4	25-6	1	#4	26-6	1	#4	27-9	1	#4	28-6
m3	str	3	#4	19-6	3	#4	20-6	3	#4	21-6	3	#4	22-6	4	#4	23-3	4	#4	24-3	4	#4	25-3	4	#4	26-3	4	#4	27-3	4	#4	28-3
m4	str	1	#4	19-6	1	#4	20-6	1	#4	21-6	1	#4	22-6	1	#4	23-3	1	#4	24-3	1	#4	25-3	1	#4	26-3	1	#4	27-3	1	#4	28-3
n1	str	3	#4	16-0	3	#4	16-9	3	#4	17-6	3	#4	18-3	4	#4	19-0	4	#4	19-9	4	#4	20-6	4	#4	21-3	4	#4	22-3	4	#4	23-3
n2	str	1	#4	16-0	1	#4	16-9	1	#4	17-6	1	#4	18-3	1	#4	19-0	1	#4	19-9	1	#4	20-6	1	#4	21-3	1	#4	22-3	1	#4	23-3
p	str	4	#5	11-0	4	#5	11-6	4	#5	12-0	4	#5	12-6	4	#5	13-0	4	#5	13-6	4	#5	14-0	4	#5	14-6	4	#5	15-0	4	#5	15-6
q	str	2	#6	13-0	2	#6	13-6	2	#6	14-0	2	#6	14-6	2	#6	15-0	2	#6	15-6	2	#6	16-0	2	#6	16-6	2	#6	17-0	2	#6	17-6
g	str	2	#4	9-6	2	#4	9-9	2	#4	10-3	2	#4	10-9	2	#4	11-0	2	#4	11-6	2	#4	12-0	2	#4	12-6	2	#4	13-0	2	#4	13-6
u	B	7	#4	4-6	7	#4	4-6	7	#4	4-6	8	#4	4-9	8	#4	4-9	8	#4	4-9	8	#4	4-9	9	#4	5-0	9	#4	5-0	9	#4	5-0
v	str	1	#4	16-3	1	#4	17-3	1	#4	18-3	1	#4	19-3	1	#4	20-3	1	#4	21-3	1	#4	22-3	1	#4	23-3	1	#4	24-3	1	#4	25-3
w	str	1	#4	15-3	1	#4	15-9	1	#4	16-6	1	#4	17-3	1	#4	17-9	1	#4	18-6	1	#4	19-3	1	#4	20-3	1	#4	20-9	1	#4	21-6

Pipe Dia	DIMENSIONS																		
	A	B	C	D	E	F	G	H	J	K	L	M	N	P	R	S	T	V	W	X
90"	0-3	2-1	2-3	0-9	5-1	16-0	5-1	9-6	7-4	19-1	7-2	4-6 1/4	0-3	9-1	15-0	7-0	20-0	4-0	6-1	5-5 7/8
96"	0-1 1/2	2-2	2-4	0-10	5-4	17-0	5-4	10-0	7-9	20-2	7-6	4-8 3/4	0-3	9-6	15-9	7-5	20-11	4-2	6-4	5-8 7/8
102"	0-6	2-2	2-6	0-11	5-7	18-0	5-7	10-6	8-2	21-3 5/8	7-10 5/8	4-11 3/4	0-3	10-0	16-6	7-9	21-11	4-5	6-7	5-11 7/8
108"	0-4 1/2	2-3	2-8	0-11	5-10	19-0	5-10	11-0	8-7	22-4 5/8	8-2 5/8	5-2	0-3	10-5	17-3	8-1	22-10	4-7	6-10	6-2 7/8
114"	0-3	2-4	2-10	0-11	6-1	20-0	6-1	11-6	9-0	23-5 5/8	8-6 5/8	5-4 5/8	0-3	10-10	18-0	8-6	23-9	4-9	7-1	6-5 7/8
120"	0-1 1/2	2-4	2-11	1-1	6-4	21-0	6-4	12-0	9-2	24-7 1/4	8-11 1/4	5-7 5/8	0-3	11-4	18-9	8-11	24-9	5-0	7-4	6-8 7/8
126"	0-6	2-6	2-10	1-3	6-7	22-0	6-7	12-6	9-6	25-8 3/4	9-3 3/4	5-10 5/8	0-3	11-10	19-6	9-3	25-9	5-3	7-9	7-2 1/4
132"	0-4 1/2	2-7	3-0	1-3	6-10	23-0	6-10	13-0	9-10	26-9 7/8	9-7 7/8	6-1 1/8	0-3	12-3	20-3	9-7	26-8	5-5	8-0	7-5 1/4
138"	0-3	2-7	3-1	1-5	7-1	24-0	7-1	13-6	10-3	27-11 3/8	10-0 3/8	6-4 1/8	0-3	12-9	21-0	10-0	27-8	5-8	8-3	7-8 1/4
144"	0-1 1/2	2-8	3-3	1-5	7-4	25-0	7-5	14-0	10-7	29-0 1/2	10-5 1/2	6-7 5/8	0-3	13-3	21-9	10-5	28-7	5-11	8-7	8-0 1/4

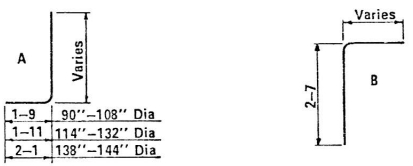

BENDS

QUANTITIES

Pipe Dia.	Reinf. (lbs)	Conc. (CY)
90"	1435	27.29
96"	1680	29.93
102"	1915	32.73
108"	2180	35.65
114"	2560	38.73
120"	2890	41.76
126"	3180	47.88
132"	3610	51.49
138"	4060	55.22
144"	4530	59.31

NOTE:
Quantities and steel list shown are for one headwall.

Registered Professional Engineer (Civil) CERTIFICATE EXPIRES DEC. 31, 19 ARIZONA, U.S.A.

DESIGN	K W	9-72	DRAWN	L A M	9-72	CHECKED	R L C	9-72

DESIGN APPROVED

APPROVED FOR DISTRIBUTION

ARIZONA
DEPARTMENT OF TRANSPORTATION
HIGHWAYS DIVISION
STANDARD DRAWINGS

INLET AND OUTLET HEADWALLS
15° SKEW PIPE CULVERT
6:1 SLOPE

REVISION

STANDARD NO.
B-13.40

DESIGN	K.W.	9-72	NO.	DESCRIPTION OF REVISIONS	MADE BY	DATE
DRAWN	G.H.	9-72	1	Revised ℄ of pipe.	WSK'seq	2-11-75
CHECKED	R.L.C.	9-72	2	Wall Thicknesses	G.H.	7-14-76
			3			

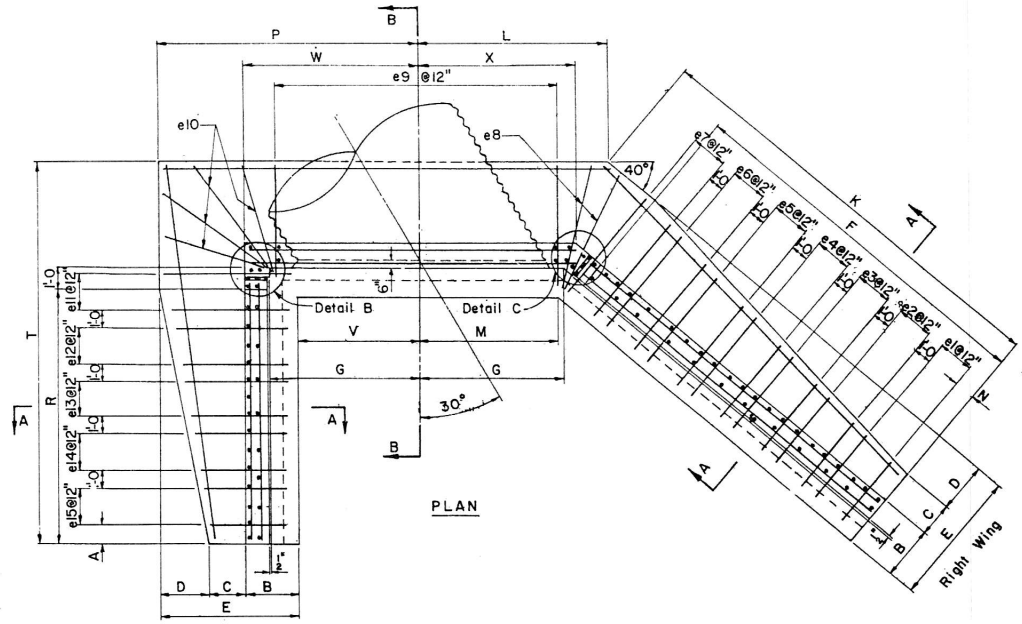

PLAN

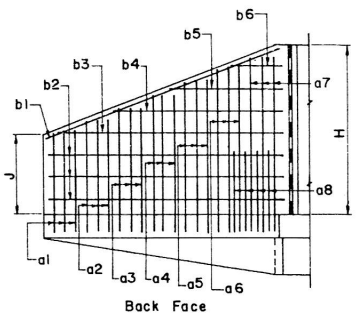

Back Face

RIGHT WING ELEVATION

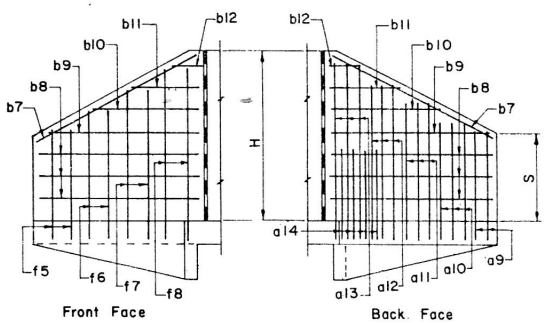

Front Face

Back Face

LEFT WING ELEVATION

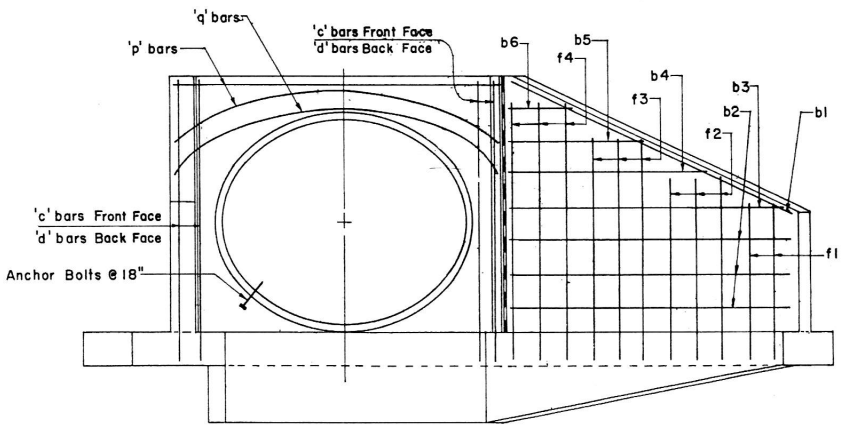

ELEVATION

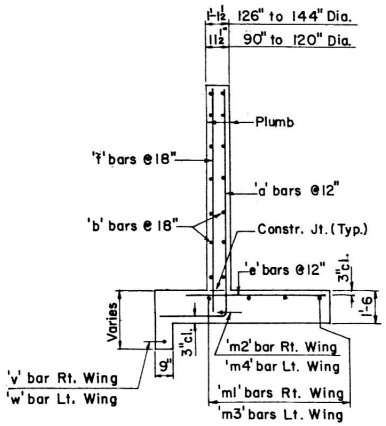

SECTION A-A

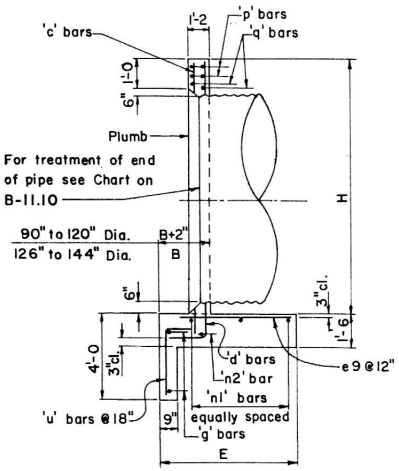

SECTION B-B

Notes: For General Notes and Misc. Details see B-11.10.
For steel list and bend diagrams see B-14.20, B-14.30 or B-14.40.

DESIGN APPROVED	ARIZONA DEPARTMENT OF TRANSPORTATION HIGHWAYS DIVISION STANDARD DRAWINGS	REVISION
APPROVED FOR DISTRIBUTION	INLET & OUTLET HEADWALLS 30° SKEW PIPE CULVERT	STANDARD NO. B-14.10

STEEL LIST

Mark	Bend	90" Dia			96" Dia			102" Dia			108" Dia			114" Dia			120" Dia			126" Dia			132" Dia			138" Dia			144" Dia		
		No	Size	Lgth	No	Size	Lgth	No	Size	Lgth	No	Size	Lgth	No	Size	Lgth	No	Size	Lgth	No	Size	Lgth	No	Size	Lgth	No	Size	Lgth	No	Size	Lgth
a1	A	3	#4	8-3	3	#4	8-6	3	#4	8-9	3	#4	9-0	3	#4	9-3	3	#4	9-6	3	#5	9-9	3	#5	10-0	3	#5	10-3	4	#5	10-9
a2	A	3	#4	9-3	3	#5	9 6	3	#5	9-9	3	#5	9-9	3	#5	10-3	3	#5	10-6	3	#5	10-9	3	#6	11-0	3	#6	11-3	3	#6	12-0
a3	A	3	#5	10-3	3	#5	10-6	3	#5	10-9	3	#5	10-9	3	#6	11-3	3	#6	11-6	3	#6	11-9	3	#7	12-0	3	#7	12-3	3	#7	12-9
a4	A	3	#6	11-3	3	#6	11-6	3	#6	11-6	3	#6	11-9	3	#7	12-3	3	#7	12-3	3	#7	12-9	3	#8	13-0	3	#8	13-3	3	#8	13-9
a5	A	2	#6	12-0	3	#7	12-6	2	#7	12-6	2	#7	12-9	3	#7	13-3	2	#8	13-3	3	#8	13-9	3	#8	14-0	3	#8	14-3	3	#8	14-9
a6	A							2	#7	13-3	2	#8	13-9	2	#8	14-3	2	#8	14-0	2	#8	14-6	3	#8	14-9	3	#8	15-3	3	#8	15-9
a7	A																2	#8	14-9	2	#8	15-3	2	#8	15-9	3	#8	16-3	2	#8	16-9
a8	A																3	#4	6-3	3	#4	6-9	7	#4	7-6	8	#4	8-0	7	#4	8-3
a9	A	3	#4	7-9	3	#4	8-0	3	#4	8-3	3	#4	8-6	3	#4	9-0	3	#4	9-3	3	#4	9-6	3	#5	9-9	3	#5	10-0	3	#5	10-3
a10	A	3	#5	9-0	3	#5	9-6	3	#5	9-9	3	#5	10-0	3	#5	10-3	3	#6	10-9	3	#6	11-0	3	#6	11-3	3	#6	11-6	3	#6	11-9
a11	A	2	#6	10-6	3	#6	11-0	3	#6	11-3	3	#6	11-6	2	#6	11-9	3	#7	12-3	3	#7	12-6	3	#7	12-9	3	#7	13-0	3	#8	13-3
a12	A	2	#6	11-6	2	#7	12-0	2	#7	12-6	3	#7	13-0	2	#7	13-0	2	#7	13-6	2	#7	13-9	3	#8	14-3	3	#8	14-6	3	#8	15-0
a13	A													2	#7	14-0	2	#7	14-9	2	#7	15-3	2	#8	15-9	2	#8	16-0	3	#8	16-6
a14	A													3	#4	6-0	4	#4	6-0	4	#4	6-0	4	#4	7-0	4	#4	7-0	8	#4	7-0
b1	str	2	#4	13-6	2	#4	14-3	2	#4	15-0	2	#4	15-9	2	#4	16-9	2	#4	17-9	2	#4	18-6	2	#4	19-3	2	#4	20-3	2	#4	21-0
b2	str	8	#4	13-3	8	#4	14-0	8	#4	14-9	8	#4	15-6	10	#4	16-6	10	#4	17-6	10	#4	18-3	10	#4	19-0	10	#4	19-9	10	#4	20-6
b3	str	2	#4	10-0	2	#4	11-6	2	#4	13-3	2	#4	14-9	2	#4	11-9	2	#4	13-3	2	#4	14-9	2	#4	16-3	2	#4	17-6	2	#4	19-6
b4	str	2	#4	5-6	2	#4	6-9	2	#4	8-6	2	#4	10-0	2	#4	7-0	2	#4	8-6	2	#4	10-3	2	#4	11-9	2	#4	13-0	2	#4	14-9
b5	str							2	#4	3-3	2	#4	5-6	2	#4	2-0	2	#4	3-9	2	#4	5-3	2	#4	7-0	2	#4	8-6	2	#4	10-3
b6	str																									2	#4	4-0	2	#4	5-6
b7	str	2	#4	10-3	2	#4	10-9	2	#4	11-3	2	#4	11-9	2	#4	12-3	2	#4	12-9	2	#4	13-3	2	#4	14-0	2	#4	14-6	2	#4	15-0
b8	str	8	#4	9-6	8	#4	10-0	8	#4	10-6	8	#4	11-0	8	#4	11-6	8	#4	12-0	10	#4	12-6	10	#4	13-0	10	#4	13-6	10	#4	14-0
b9	str	2	#4	6-6	2	#4	7-6	2	#4	8-6	2	#4	9-6	2	#4	10-6	2	#4	11-6	2	#4	9-6	2	#4	10-6	2	#4	11-3	2	#4	12-3
b10	str	2	#4	3-6	2	#4	4-6	2	#4	5-6	2	#4	6-6	2	#4	7-6	2	#4	8-6	2	#4	6-6	2	#4	7-6	2	#4	8-3	2	#4	9-3
b11	str				2	#4	1-6	2	#4	2-6	2	#4	3-6	2	#4	4-6	2	#4	5-6	2	#4	3-3	2	#4	4-6	2	#4	5-3	2	#4	6-6
b12	str													2	#4	1-6	2	#4	2-6				2	#4	1-3	2	#4	2-3	2	#4	3-3
c	str	5	#4	10-6	5	#4	11-0	5	#4	11-6	5	#4	12-0	5	#4	12-6	5	#4	13-0	5	#4	13-6	5	#4	14-0	5	#4	14-6	5	#4	15-0
d	A	6	#6	12-3	6	#6	12-9	6	#7	13-3	6	#7	13-9	6	#7	14-6	6	#7	15-0	6	#7	15-6	6	#7	16-0	6	#7	16-6	6	#7	17-0
e1	str	3	#4	2-3	3	#4	2-3	3	#4	2-6	3	#4	2-6	3	#4	2-6	3	#4	2-9	3	#4	2-9	3	#4	3-0	3	#4	3-0	4	#4	3-6
e2	str	3	#4	2-9	3	#4	2-9	3	#4	3-0	3	#4	3-0	3	#4	3-0	3	#4	3-3	3	#4	3-3	3	#4	3-6	3	#4	3-6	3	#4	3-9
e3	str	3	#4	3-3	3	#4	3-6	3	#4	3-3	3	#4	3-6	3	#4	3-6	3	#4	3-9	3	#4	3-9	3	#4	4-0	3	#5	4-0	3	#5	4-3
e4	str	3	#4	3-9	3	#4	4-0	3	#4	3-9	3	#4	4-0	3	#5	4-3	3	#5	4-3	3	#5	4-3	3	#5	4-6	3	#5	4-6	3	#6	4-9
e5	str	2	#4	4-3	3	#5	4-6	2	#5	4-3	3	#5	4-6	3	#5	4-9	3	#5	4-6	3	#6	4-9	3	#6	5-0	3	#6	5-0	3	#6	5-3
e6	str							2	#5	4-9	2	#5	5-0	3	#6	5-3	2	#6	5-0	2	#6	5-3	2	#7	5-6	3	#7	5-9	3	#7	6-0
e7	str																2	#6	5-6	2	#7	5-9	2	#7	6-0	3	#7	6-3	3	#8	6-6
e8	str	2	#4	4-3	2	#5	4-6	2	#5	4-9	2	#5	5-0	2	#6	5-3	2	#6	5-6	2	#7	5-9	2	#7	6-0	2	#7	6-3	2	#8	6-6
e9	str	11	#4	4-3	11	#5	4-6	12	#5	4-9	12	#5	5-0	13	#6	5-3	13	#6	5-6	14	#7	5-9	14	#7	6-0	15	#7	6-3	16	#8	6-6
e10	str	4	#4	4-3	4	#5	4-6	4	#5	4-9	4	#5	5-0	4	#6	5-3	4	#6	5-6	4	#7	5-9	4	#7	6-0	4	#7	6-3	4	#8	6-6
e11	str	2	#4	4-3	2	#5	4-6	3	#5	4-9	3	#5	4-6	2	#6	5-3	2	#6	5-6	2	#7	5-9	2	#7	6-0	3	#7	6-3	3	#8	6-6
e12	str	3	#4	3-6	3	#4	3-9	3	#4	4-0	3	#5	4-0	2	#5	4-9	2	#6	5-0	3	#6	5-0	3	#6	5-3	3	#7	5-6	3	#7	5-9
e13	str	3	#4	3-0	3	#4	3-0	3	#4	3-3	3	#4	3-3	3	#5	4-0	3	#5	4-3	3	#5	4-3	3	#5	4-6	3	#5	4-6	3	#6	4-9
e14	str	3	#4	2-3	3	#4	2-3	3	#4	2-6	3	#4	2-9	3	#4	3-3	3	#4	3-6	3	#4	3-6	3	#4	3-9	3	#4	3-9	3	#5	4-0
e15	str													3	#4	2-6	3	#4	2-9	3	#4	2-9	3	#4	3-0	3	#4	3-0	3	#4	3-6
f1	str	3	#4	6-6	3	#4	6-9	3	#4	7-0	3	#4	7-3	3	#4	7-6	4	#4	7-6	4	#4	7-9	4	#4	8-0	4	#4	8-3	4	#4	8-9
f2	str	3	#4	8-0	3	#4	8-3	3	#4	8-6	3	#4	8-9	3	#4	9-0	3	#4	9-6	3	#4	9-9	4	#4	10-0	4	#4	10-3	4	#4	10-6
f3	str	2	#4	9-3	2	#4	9-9	3	#4	10-0	3	#4	10-3	3	#4	10-6	3	#4	10-9	3	#4	11-3	3	#4	12-0	3	#4	12-3	3	#4	12-6
f4	str	2	#4	10-6	2	#4	10-9	2	#4	11-0	2	#4	11-6	3	#4	11-9	3	#4	12-3	3	#4	12-9	3	#4	13-3	3	#4	13-9	3	#4	14-0
f5	str	3	#4	6-0	3	#4	6-0	3	#4	6-6	3	#4	6-9	3	#4	7-0	3	#4	7-3	3	#4	7-6	3	#4	7-9	3	#4	8-0	3	#4	8-3
f6	str	2	#4	8-3	3	#4	8-3	3	#4	8-9	3	#4	9-0	2	#4	9-3	2	#4	9-6	2	#4	9-9	3	#4	9-9	3	#4	10-3	3	#4	10-6
f7	str	2	#4	9-9	2	#4	10-6	2	#4	11-0	2	#4	11-3	2	#4	10-9	2	#4	11-0	2	#4	11-3	2	#4	12-0	2	#4	12-6	2	#4	12-9
f8	str													2	#4	12-3	2	#4	12-6	2	#4	12-9	2	#4	13-9	2	#4	14-0	2	#4	14-3
m1	str	3	#4	15-6	3	#4	16-0	3	#4	17-0	3	#4	18-0	4	#4	19-0	4	#4	20-0	4	#4	20-9	4	#4	21-6	4	#4	22-6	4	#4	23-3
m2	str	1	#4	15-6	1	#4	16-0	1	#4	17-0	1	#4	18-0	1	#4	19-0	1	#4	20-0	1	#4	20-9	1	#4	21-6	1	#4	22-6	1	#4	23-3
m3	str	3	#4	14-0	3	#4	14-9	3	#4	15-6	3	#4	16-3	4	#4	17-0	4	#4	17-6	4	#4	18-3	4	#4	19-0	4	#4	19-9	4	#4	20-6
m4	str	1	#4	14-0	1	#4	14-9	1	#4	15-6	1	#4	16-3	1	#4	17-0	1	#4	17-6	1	#4	18-3	1	#4	19-0	1	#4	19-9	1	#4	20-6
n1	str	3	#4	15-9	3	#4	16-9	3	#4	17-9	3	#4	18-9	4	#4	19-6	4	#4	20-3	4	#4	21-3	4	#4	22-0	4	#4	23-0	4	#4	23-6
n2	str	1	#4	15-9	1	#4	16-9	1	#4	17-9	1	#4	18-9	1	#4	19-6	1	#4	20-3	1	#4	21-3	1	#4	22-0	1	#4	23-0	1	#4	23-6
p	str	4	#5	11-9	4	#5	12-6	4	#5	13-0	4	#5	13-6	4	#5	14-3	4	#5	14-6	4	#5	15-6	4	#5	16-0	4	#5	16-6	4	#5	17-0
q	str	2	#6	13-9	2	#6	14-6	2	#6	15-0	2	#6	15-6	2	#6	16-3	2	#6	16-6	2	#6	17-6	2	#6	18-0	2	#6	18-6	2	#6	19-0
g	str	2	#4	10-0	2	#4	10-6	2	#4	11-3	2	#4	11-9	2	#4	12-3	2	#4	12-9	2	#4	13-3	2	#4	13-9	2	#4	14-3	2	#4	14-9
u	B	7	#4	4-6	8	#4	4-6	8	#4	4-6	8	#4	4-9	9	#4	4-9	9	#4	4-9	9	#4	4-9	10	#4	5-0	10	#4	5-0	10	#4	5-0
v	str	1	#4	14-3	1	#4	15-0	1	#4	15-9	1	#4	16-6	1	#4	17-3	1	#4	18-3	1	#4	19-0	1	#4	20-0	1	#4	20-9	1	#4	21-3
w	str	1	#4	9-6	1	#4	9-9	1	#4	10-3	1	#4	10-9	1	#4	11-3	1	#4	11-9	1	#4	12-3	1	#4	12-9	1	#4	13-3	1	#4	13-6

DIMENSIONS

Pipe Dia	A	B	C	D	E	F	G	H	J	K	L	M	N	P	R	S	T	V	W	X
90"	0-6	2-1	1-4	1-8	5-1	13-3	5-5	9-6	5-3	15-8 1/2	6-10 3/8	5-0 1/4	0-4	9-5	9-6	4-9	14-6	4-4	6-5	5-7
96"	0-3	2-2	1-5	1-9	5-4	14-0	5-9	10-0	5-6	16-6 1/4	7-3 1/4	5-3 7/8	0-3	9-11	10-0	5-0	15-2	4-7	6-9	5-11
102"	0-6	2-2	1-6	1-11	5-7	14-9	6-1	10-6	5-9	17-4 1/4	7-8 1/4	5-7 7/8	0-2	10-6	10-6	5-3	15-11	4-11	7-1	6-3
108"	0-3	2-2	1-8	2-0	5-10	15-6	6-4	11-0	6-0	18-2 3/8	8-0 3/8	5-10 7/8	0-6	11-0	11-0	5-6	16-8	5-2	7-4	6-6
114"	0-6	2-3	1-8	2-2	6-1	16-6	6-8	11-6	6-3	19-3 1/8	8-5 1/8	6-2 1/2	0-6	11-6	11-6	5-9	17-4	5-5	7-8	6-10
120"	0-3	2-4	1-10	2-2	6-4	17-6	6-11	12-0	6-5	20-3 7/8	8-8 7/8	6-5 1/8	0-6	11-11	12-0	6-0	18-0	5-7	7-11	7-1
126"	0-6	2-6	1-8	2-5	6-7	18-3	7-3	12-6	6-8	21-1 7/8	9-1 7/8	6-9 1/8	0-4	12-6	12-6	6-3	18-9	5-11	8-5	7-8 1/8
132"	0-3	2-6	1-10	2-6	6-10	19-0	7-6	13-0	6-11	22-0	9-6	7-0 1/8	0-3	13-0	13-0	6-6	19-6	6-2	8-8	7-11 1/8
138"	0-6	2-7	2-0	2-6	7-1	19-9	7-10	13-6	7-2	22-9 3/4	9-10 3/4	7-3 7/8	0-2	13-6	13-6	6-9	20-2	6-5	9-0	8-3 1/8
144"	0-3	2-8	2-2	2-6	7-4	20-6	8-1	14-0	7-6	23-7 1/2	10-2 1/2	7-6 1/2	0-6	13-11	14-0	7-0	20-10	6-7	9-3	8-6 1/8

QUANTITIES

Pipe Dia.	Reinf. (lbs)	Conc. (CY)
90"	1065	21.88
96"	1240	23.04
102"	1395	25.20
108"	1505	27.38
114"	1800	29.79
120"	2025	32.22
126"	2250	36.76
132"	2585	39.45
138"	2775	42.38
144"	3075	45.27

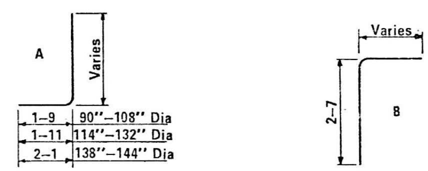

BENDS

NOTE:

Quantities and steel list shown are for one headwall.

Registered Professional Engineer
ARIZONA, U.S.A.

DESIGN APPROVED

APPROVED FOR DISTRIBUTION

ARIZONA
DEPARTMENT OF TRANSPORTATION
HIGHWAYS DIVISION
STANDARD DRAWINGS

INLET AND OUTLET HEADWALLS
30° SKEW PIPE CULVERT
2:1 SLOPE

REVISION

STANDARD NO.
B-14.20

DESIGN K W 9-72 | DRAWN LAM 9-72 | CHECKED RLC 9-72

STEEL LIST

Mark	Bend	90" Dia			96" Dia			102" Dia			108" Dia			114" Dia			120" Dia			126" Dia			132" Dia			138" Dia			144" Dia		
		No	Size	Lgth	No	Size	Lgth	No	Size	Lgth	No	Size	Lgth	No	Size	Lgth	No	Size	Lgth	No	Size	Lgth	No	Size	Lgth	No	Size	Lgth	No	Size	Lgth
a1	A	4	#5	10-0	4	#5	10-6	4	#5	10-9	4	#6	11-3	4	#6	11-9	4	#6	12-3	4	#7	12-6	5	#7	13-0	5	#7	13-3	5	#8	13-9
a2	A	3	#5	10-6	4	#6	11-0	4	#6	11-3	4	#6	11-9	4	#6	12-3	4	#7	12-9	4	#7	13-0	4	#8	13-9	5	#8	14-3	5	#8	14-9
a3	A	3	#6	11-0	3	#6	11-9	3	#6	12-0	4	#7	12-6	4	#7	13-0	4	#7	13-3	4	#8	13-9	4	#8	14-3	4	#8	15-0	4	#8	15-6
a4	A	3	#6	11-9	3	#6	12-3	3	#7	12-6	3	#7	13-0	4	#7	13-9	4	#8	14-0	4	#8	14-6	4	#8	15-0	4	#8	15-6	4	#8	16-0
a5	A	3	#6	12-0	2	#7	12-6	3	#7	13-0	3	#7	13-6	3	#8	14-3	3	#8	14-6	4	#8	15-0	4	#8	15-6	3	#8	16-3	4	#8	16-9
a6	A																														
a7	A																														
a8	A																			3	#4	8-0	7	#4	8-3	10	#4	8-9	11	#4	8-3
a9	A	3	#4	9-0	3	#4	9-6	4	#5	9-9	4	#5	10-0	4	#6	10-9	4	#6	11-0	4	#6	11-3	4	#6	11-9	4	#6	12-0	4	#7	12-6
a10	A	3	#4	9-9	3	#5	10-3	3	#5	10-9	4	#6	11-0	4	#6	11-6	4	#6	12-0	4	#7	12-3	4	#7	12-6	4	#7	13-0	4	#7	13-6
a11	A	3	#5	10-6	3	#6	11-0	3	#6	11-6	3	#7	12-0	3	#7	12-6	4	#7	13-0	4	#8	13-3	4	#8	13-6	4	#8	14-0	4	#8	14-6
a12	A	3	#6	11-3	3	#6	11-9	3	#7	12-3	3	#7	12-9	3	#7	13-3	3	#8	14-0	3	#8	14-3	4	#8	14-6	4	#8	15-0	4	#8	15-6
a13	A	2	#6	11-9	3	#7	12-3	3	#7	12-9	2	#7	13-6	3	#8	14-0	2	#8	14-9	3	#8	15-0	3	#8	15-6	3	#8	16-0	4	#8	16-6
a14	A																			2	#4	7-0	6	#4	6-6	6	#4	7-3	7	#4	7-9
b1	str	2	#4	15-0	2	#4	15-9	2	#4	16-6	2	#4	17-3	2	#4	18-0	2	#4	18-9	2	#4	19-6	2	#4	20-0	2	#4	20-9	2	#4	21-3
b2	str	10	#4	14-9	10	#4	15-6	12	#4	16-3	12	#4	17-0	12	#4	17-9	12	#4	18-6	14	#4	19-3	14	#4	19-9	14	#4	20-6	14	#4	21-0
b3	str	2	#4	9-9	2	#4	13-6	2	#4	7-9	2	#4	10-6	2	#4	13-6	2	#4	16-9	2	#4	10-6	2	#4	13-6	2	#4	16-3	2	#4	19-3
b4	str				2	#4	4-6							2	#4	4-0	2	#4	7-3				2	#4	4-3	2	#4	7-0	2	#4	10-0
b5	str																														
b6	str	2	#4	13-6	2	#4	14-0	2	#4	14-9	2	#4	15-6	2	#4	16-0	2	#4	16-6	2	#4	17-3	2	#4	18-0	2	#4	18-6	2	#4	19-0
b7	str	8	#4	13-6	10	#4	14-0	10	#4	14-9	10	#4	15-6	10	#4	16-0	12	#4	16-6	12	#4	17-3	12	#4	18-0	12	#4	18-6	12	#4	19-0
b8	str	2	#4	12-9	2	#4	8-9	2	#4	10-9	2	#4	12-9	2	#4	14-6	2	#4	10-9	2	#4	12-6	2	#4	14-6	2	#4	16-6	2	#4	18-6
b9	str	2	#4	6-9	2	#4	2-9	2	#4	4-9	2	#4	6-9	2	#4	8-6	2	#4	4-9	2	#4	6-6	2	#4	8-9	2	#4	10-9	2	#4	12-6
b10	str													2	#4	2-9							2	#4	2-6	2	#4	4-6	2	#4	6-9
b11	str																														
b12	str																														
c	str	5	#4	10-6	5	#4	11-0	5	#4	11-6	5	#4	12-0	5	#4	12-6	5	#4	13-0	5	#4	13-6	5	#4	14-0	5	#4	14-6	5	#4	15-0
d	A	6	#6	12-3	6	#6	12-9	6	#7	13-3	6	#7	13-9	6	#7	14-6	6	#7	15-0	6	#7	15-6	6	#7	16-0	6	#7	16-6	6	#7	17-0
e1	str	4	#4	3-0	4	#4	3-3	4	#4	3-3	4	#4	3-6	4	#4	3-9	4	#4	4-0	4	#5	4-3	5	#5	4-3	5	#5	4-6	5	#5	4-9
e2	str	3	#4	3-3	4	#4	3-6	4	#4	3-6	4	#4	3-9	4	#5	4-3	4	#5	4-3	4	#5	4-6	4	#6	4-6	5	#6	4-9	5	#6	5-0
e3	str	3	#4	3-6	3	#4	3-9	3	#4	3-9	4	#5	4-3	4	#5	4-6	4	#5	4-6	4	#6	4-9	4	#6	5-0	4	#6	5-0	4	#7	5-3
e4	str	3	#4	3-9	3	#4	4-0	3	#5	4-3	3	#5	4-6	4	#5	4-9	4	#6	4-9	4	#6	5-0	4	#7	5-3	4	#7	5-6	4	#7	5-9
e5	str	3	#4	4-0	3	#5	4-3	3	#5	4-6	3	#5	4-9	3	#6	5-0	4	#6	5-0	4	#7	5-3	4	#7	5-6	4	#7	5-9	4	#8	6-0
e6	str																														
e7	str																														
e8	str	2	#4	4-3	2	#5	4-6	2	#5	4-9	2	#5	5-0	2	#6	5-0	2	#6	5-3	2	#7	5-6	2	#7	5-9	2	#7	6-0	2	#8	6-3
e9	str	10	#4	4-3	11	#5	4-6	11	#5	4-9	12	#5	5-0	12	#6	5-0	13	#6	5-3	13	#7	5-6	14	#7	5-9	14	#7	6-0	15	#8	6-3
e10	str	4	#4	4-3	4	#5	4-6	4	#5	4-9	4	#5	5-0	4	#6	5-0	4	#6	5-3	4	#7	5-6	4	#7	5-9	4	#7	6-0	4	#8	6-3
e11	str	3	#4	4-0	3	#5	4-3	4	#5	4-6	3	#5	4-9	3	#6	4-9	3	#6	5-0	3	#7	5-3	3	#7	5-6	4	#7	5-9	4	#8	6-0
e12	str	3	#4	3-9	3	#4	4-0	4	#4	4-0	3	#5	4-6	3	#5	4-6	3	#6	4-9	3	#6	5-0	4	#6	5-3	4	#7	5-6	4	#7	5-9
e13	str	3	#4	3-6	3	#4	3-9	4	#4	3-9	3	#4	4-0	3	#4	4-3	4	#5	4-6	4	#5	4-9	4	#6	4-9	4	#6	5-0	4	#6	5-3
e14	str	3	#4	3-3	3	#4	3-6	4	#4	3-3	4	#4	3-9	4	#4	4-0	4	#4	4-3	4	#4	4-3	4	#5	4-6	4	#5	4-9	4	#5	5-0
e15	str	3	#4	3-0	3	#4	3-0				4	#4	3-6	4	#4	3-9	4	#4	4-0	4	#4	4-0	4	#4	4-3	4	#4	4-6	4	#4	4-6
f1	str	4	#4	8-3	4	#4	8-9	3	#4	9-0	3	#4	9-6	4	#4	9-9	4	#4	10-3	4	#4	10-6	4	#4	11-0	4	#4	11-3	4	#4	11-9
f2	str	4	#4	9-3	4	#4	9-9	3	#4	9-9	3	#4	10-3	3	#4	10-9	3	#4	11-3	4	#4	11-6	4	#4	12-0	4	#4	12-3	4	#4	12-9
f3	str	3	#4	10-3	3	#4	10-9	3	#4	10-6	3	#4	11-0	3	#4	11-6	3	#4	12-0	3	#4	12-6	3	#4	13-0	4	#4	13-3	4	#4	13-9
f4	str							3	#4	11-3	3	#4	11-9	3	#4	12-3	3	#4	12-6	3	#4	13-3	3	#4	13-9	3	#4	14-3	3	#4	14-9
f5	str	4	#4	7-3	4	#4	7-9	4	#4	8-0	4	#4	8-6	3	#4	8-9	3	#4	9-0	3	#4	9-6	4	#4	9-9	4	#4	10-0	4	#4	10-6
f6	str	3	#4	8-9	3	#4	9-3	4	#4	9-6	4	#4	10-0	3	#4	9-9	3	#4	10-3	3	#4	10-6	3	#4	11-3	3	#4	11-6	4	#4	12-0
f7	str	3	#4	10-0	3	#4	10-3	3	#4	11-0	3	#4	11-6	3	#4	10-9	3	#4	11-3	3	#4	11-9	3	#4	12-3	3	#4	12-9	3	#4	13-6
f8	str													3	#4	12-0	3	#4	12-6	3	#4	12-9	3	#4	13-6	3	#4	13-9	3	#4	14-6
m1	str	3	#4	17-0	3	#4	17-9	3	#4	18-6	3	#4	19-6	3	#4	20-3	3	#4	21-0	3	#4	21-9	4	#4	22-6	4	#4	23-3	4	#4	23-9
m2	str	1	#4	17-0	1	#4	17-9	1	#4	18-6	1	#4	19-6	1	#4	20-3	1	#4	21-0	1	#4	21-9	1	#4	22-6	1	#4	23-3	1	#4	23-9
m3	str	3	#4	18-3	3	#4	18-9	3	#4	19-9	3	#4	20-9	3	#4	21-6	3	#4	22-3	3	#4	23-3	4	#4	24-0	4	#4	24-9	4	#4	25-6
m4	str	1	#4	18-3	1	#4	18-9	1	#4	19-9	1	#4	20-9	1	#4	21-6	1	#4	22-3	1	#4	23-3	1	#4	24-0	1	#4	24-9	1	#4	25-6
n1	str	3	#4	15-6	3	#4	16-6	3	#4	17-6	3	#4	18-6	3	#4	19-3	3	#4	20-0	3	#4	21-0	4	#4	21-9	4	#4	22-9	4	#4	23-3
n2	str	1	#4	15-6	1	#4	16-6	1	#4	17-6	1	#4	18-6	1	#4	19-3	1	#4	20-0	1	#4	21-0	1	#4	21-9	1	#4	22-9	1	#4	23-3
p	str	4	#5	11-9	4	#5	12-3	4	#5	13-0	4	#5	13-6	4	#5	14-0	4	#5	14-6	4	#5	15-3	4	#5	15-9	4	#5	16-6	4	#5	17-0
q	str	2	#6	12-9	2	#6	13-3	2	#6	14-0	2	#6	14-6	2	#6	15-0	2	#6	15-6	2	#6	16-3	2	#6	16-9	2	#6	17-6	2	#6	18-0
g	str	2	#4	9-6	2	#4	10-0	2	#4	10-9	2	#4	11-3	2	#4	11-9	2	#4	12-0	2	#4	12-9	2	#4	13-3	2	#4	14-0	2	#4	14-3
u	B	7	#4	4-0	8	#4	4-0	8	#4	4-0	8	#4	4-0	9	#4	4-3	9	#4	4-3	9	#4	4-3	10	#4	4-3	10	#4	4-6	10	#4	4-6
v	str	1	#4	15-9	1	#4	16-3	1	#4	17-3	1	#4	17-9	1	#4	18-6	1	#4	19-3	1	#4	20-3	1	#4	20-6	1	#4	21-3	1	#4	21-9
w	str	1	#4	14-0	1	#4	14-6	1	#4	15-0	1	#4	15-9	1	#4	16-3	1	#4	16-9	1	#4	17-6	1	#4	17-9	1	#4	18-6	1	#4	19-0

Pipe Dia	DIMENSIONS																			
	A	B	C	D	E	F	G	H	J	K	L	M	N	P	R	S	T	V	W	X
90"	0-6	2-1	2-2	0-10	5-1	14-9	5-5	9-6	7-2	17-2 1/2	6-10 1/4	5-0 1/4	0-2	9-5	13-6	6-2	18-6	4-4	6-5	5-7
96"	0-3	2-2	2-4	0-10	5-4	15-6	5-9	10-0	7-6	18-0 1/4	7-3 1/4	5-3 7/8	0-6	9-11	14-0	6-6	19-2	4-7	6-9	5-11
102"	0-1 1/2	2-2	2-6	0-11	5-7	16-3	6-1	10-6	7-11	18-10 1/4	7-8 1/4	5-7 7/8	0-4	10-6	14-9	6-10	20-2	4-11	7-1	6-3
108"	0-6	2-3	2-7	1-0	5-10	17-0	6-4	11-0	8-3	19-8 3/8	8-0 3/8	5-10 7/8	0-3	11-0	15-6	7-2	21-2	5-2	7-4	6-6
114"	0-3	2-3	2-8	1-2	6-1	17-9	6-8	11-6	8-8	20-6 1/8	8-5 1/8	6-2 1/2	0-2	11-6	16-0	7-6	21-10	5-5	7-8	6-10
120"	0-6	2-4	2-10	1-2	6-4	18-6	6-10	12-0	9-1	21-3 7/8	8-7 7/8	6-4 1/8	0-6	11-10	16-6	7-10	22-6	5-6	7-10	7-0
126"	0-4 1/2	2-6	2-10	1-3	6-7	19-3	7-3	12-6	9-5	22-1 7/8	9-1 7/8	6-9 1/8	0-4	12-6	17-3	8-2	23-6	5-11	8-5	7-8 1/8
132"	0-3	2-6	3-0	1-4	6-10	19-9	7-6	13-0	9-10	22-9	9-6	7-0 1/8	0-2	13-0	18-0	8-6	24-6	6-2	8-8	7-11 1/8
138"	0-6	2-7	3-1	1-5	7-1	20-6	7-10	13-6	10-2	23-6 3/4	9-10 3/4	7-3 7/8	0-6	13-6	18-6	8-10	25-2	6-5	9-0	8-3 1/8
144"	0-3	2-8	3-2	1-6	7-4	21-0	8-1	14-0	10-7	24-1 1/2	10-2 1/2	7-6 1/2	0-3	13-11	19-0	9-3	25-10	6-7	9-3	8-6 1/8

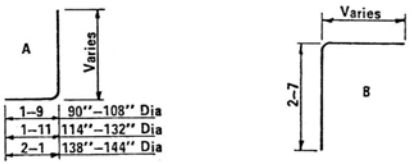

BENDS

QUANTITIES

Pipe Dia.	Reinf. (lbs)	Conc. (CY)
90"	1305	25.47
96"	1520	27.84
102"	1755	30.49
108"	1950	33.10
114"	2245	35.65
120"	2470	38.14
126"	2895	43.91
132"	3270	46.95
138"	3455	50.13
144"	3900	53.09

NOTE:
Quantities and steel list shown are for one headwall.

Registered Professional Engineer (Civil) Certificate Expires Dec. 31, 19 Arizona, U.S.A.

DESIGN APPROVED	ARIZONA DEPARTMENT OF TRANSPORTATION HIGHWAYS DIVISION STANDARD DRAWINGS	REVISION
APPROVED FOR DISTRIBUTION	INLET AND OUTLET HEADWALLS 30° SKEW PIPE CULVERT 4:1 SLOPE	STANDARD NO. B-14.30

DESIGN	K W	9-72	DRAWN	L.A.M.	9-72	CHECKED	R.L.C.	9-72

STEEL LIST

Mark	Bend	90" Dia			96" Dia			102" Dia			108" Dia			114" Dia			120" Dia			126" Dia			132" Dia			138" Dia			144" Dia		
		No	Size	Lgth	No	Size	Lgth	No	Size	Lgth	No	Size	Lgth	No	Size	Lgth	No	Size	Lgth	No	Size	Lgth	No	Size	Lgth	No	Size	Lgth	No	Size	Lgth
a1	A	5	#5	10-6	4	#5	11-0	5	#6	11-3	5	#6	11-9	5	#6	12-3	5	#7	12-9	5	#7	13-0	5	#7	13-6	5	#8	14-0	6	#8	14-6
a2	A	5	#5	11-0	4	#6	11-3	4	#6	11-9	5	#6	12-3	5	#7	12-9	5	#7	13-3	5	#7	13-6	5	#8	14-0	5	#8	14-6	5	#8	15-0
a3	A	5	#6	11-6	4	#6	11-9	4	#6	12-3	4	#7	12-9	4	#7	13-3	5	#7	13-9	5	#8	14-3	5	#8	14-6	5	#8	15-0	5	#8	15-6
a4	A	4	#6	12-0	4	#6	12-3	4	#7	12-6	4	#7	13-3	4	#7	13-9	4	#8	14-3	5	#8	14-9	5	#8	15-0	5	#8	15-6	5	#8	16-0
a5	A				4	#7	12-9	4	#7	13-3	3	#7	13-9	4	#8	14-3	4	#8	14-9	4	#8	15-3	4	#8	15-6	5	#8	16-0	5	#8	16-6
a6	A																														
a7	A																														
a8	A																			3	#4	7-0	8	#4	8-3	14	#4	7-0	19	#4	8-3
a9	A	4	#4	10-0	5	#4	10-6	5	#5	10-9	5	#5	11-0	5	#5	11-9	4	#6	12-0	5	#6	12-6	5	#7	12-9	5	#7	13-3	5	#7	13-9
a10	A	4	#5	10-6	4	#5	11-0	5	#5	11-6	5	#6	11-9	5	#6	12-6	4	#6	12-6	4	#7	13-0	4	#7	13-6	5	#7	14-3	5	#7	14-6
a11	A	4	#5	11-3	4	#6	11-9	4	#6	12-3	4	#7	12-9	5	#7	13-3	4	#7	13-3	4	#7	13-9	4	#7	14-3	4	#8	15-0	5	#8	15-3
a12	A	4	#6	12-0	4	#7	12-6	3	#7	13-0	4	#7	13-3	4	#7	14-0	4	#7	14-0	4	#8	14-6	4	#8	15-0	4	#8	15-6	4	#8	16-0
a13	A																4	#8	14-6	3	#8	15-0	4	#8	15-6	4	#8	16-3	4	#8	16-9
a14	A																									3	#4	8-0	7	#4	8-9
b1	str	2	#4	18-6	2	#4	19-3	2	#4	20-0	2	#4	20-9	2	#4	21-6	2	#4	22-3	2	#4	23-0	2	#4	23-9	2	#4	24-6	2	#4	25-3
b2	str	10	#4	18-3	12	#4	19-0	12	#4	19-9	12	#4	20-6	12	#4	21-3	14	#4	22-0	14	#4	22-9	14	#4	23-6	16	#4	24-3	16	#4	25-0
b3	str	2	#4	15-0	2	#4	5-9	2	#4	9-9	2	#4	15-0	2	#4	19-6	2	#4	10-0	2	#4	14-6	2	#4	19-9	2	#4	10-0	2	#4	15-0
b4	str													2	#4	5-9							2	#4	5-9						
b5	str																														
b6	str																														
b7	str	2	#4	15-3	2	#4	16-0	2	#4	16-9	2	#4	17-6	2	#4	18-3	2	#4	19-0	2	#4	19-9	2	#4	20-6	2	#4	21-3	2	#4	22-0
b8	str	10	#4	15-0	10	#4	15-9	10	#4	16-6	12	#4	17-3	12	#4	18-0	12	#4	18-9	14	#4	19-6	14	#4	20-3	14	#4	21-0	14	#4	21-9
b9	str	2	#4	10-0	2	#4	13-0	2	#4	15-9	2	#4	9-9	2	#4	12-9	2	#4	16-0	2	#4	10-0	2	#4	12-9	2	#4	15-9	2	#4	19-0
b10	str				2	#4	3-9	2	#4	6-9				2	#4	4-0	2	#4	7-0				2	#4	3-6	2	#4	6-9	2	#4	9-9
b11	str																														
b12	str																														
c	str	5	#4	10-6	5	#4	11-0	5	#4	11-6	5	#4	12-0	5	#4	12-6	5	#4	13-0	5	#4	13-6	5	#4	14-0	5	#4	14-6	5	#4	15-0
d	A	6	#6	12-3	6	#6	12-9	6	#7	13-3	6	#7	13-9	6	#7	14-6	6	#7	15-0	6	#7	15-6	6	#7	16-0	6	#7	16-6	6	#7	17-0
e1	str	5	#4	3-3	4	#4	3-6	5	#4	3-9	5	#4	4-0	5	#4	4-3	5	#5	4-3	5	#5	4-6	5	#5	4-6	5	#6	4-9	6	#6	5-0
e2	str	5	#4	3-6	4	#4	3-9	4	#4	4-0	5	#4	4-3	5	#5	4-6	5	#5	4-6	5	#5	4-9	5	#6	4-9	5	#6	5-3	5	#6	5-6
e3	str	5	#4	3-9	4	#4	4-0	4	#4	4-3	4	#5	4-6	4	#5	4-9	5	#5	4-9	5	#6	5-0	5	#6	5-0	5	#6	5-6	5	#7	5-9
e4	str	4	#4	4-0	4	#4	4-3	4	#5	4-6	4	#5	4-9	4	#5	5-0	4	#6	5-3	5	#6	5-6	5	#7	5-6	5	#7	6-0	5	#7	6-3
e5	str				4	#5	1-6	4	#5	4-9	4	#5	5-0	4	#6	5-3	4	#6	5-6	4	#7	5-9	5	#7	6-0	5	#7	6-3	5	#8	6-6
e6	str																														
e7	str																														
e8	str	2	#4	4-3	2	#5	4-6	2	#5	4-9	2	#5	5-0	2	#6	5-3	2	#6	5-6	2	#7	5-9	2	#7	6-0	2	#7	6-3	2	#8	6-6
e9	str	11	#4	4-3	12	#5	4-6	12	#5	4-9	13	#5	5-0	13	#6	5-3	14	#6	5-6	14	#7	5-9	15	#7	6-0	16	#7	6-3	16	#8	6-6
e10	str	3	#4	4-3	3	#5	4-6	3	#5	4-9	3	#5	5-0	4	#6	5-3	4	#6	5-6	4	#7	5-9	4	#7	6-0	4	#7	6-3	4	#8	6-6
e11	str	4	#4	4-0	4	#5	4-3	4	#5	4-6	4	#5	4-9	4	#6	5-0	4	#6	5-3	4	#6	5-6	4	#7	5-9	4	#7	6-0	4	#8	6-3
e12	str	4	#4	3-9	4	#5	4-0	4	#5	4-3	4	#5	4-6	5	#5	4-9	4	#6	5-0	4	#6	5-3	4	#6	5-6	4	#7	5-9	4	#7	6-0
e13	str	4	#4	3-6	4	#4	3-9	5	#4	4-0	5	#4	4-3	5	#5	4-6	4	#5	4-9	4	#6	5-0	4	#6	5-3	4	#6	5-6	5	#7	5-9
e14	str	4	#4	3-3	5	#4	3-6	5	#4	3-9	5	#4	4-0	5	#4	4-3	4	#5	4-6	4	#5	4-9	4	#5	4-9	5	#6	5-0	5	#6	5-3
e15	str																4	#5	4-3	5	#5	4-6	5	#5	4-6	5	#6	4-9	5	#6	5-0
f1	str	4	#4	8-9	4	#4	9-3	4	#4	9-6	4	#4	10-0	4	#4	10-6	4	#4	10-9	4	#4	11-3	5	#4	11-9	5	#4	12-0	5	#4	12-6
f2	str	3	#4	9-3	4	#4	9-9	4	#4	10-0	4	#4	10-6	4	#4	11-0	4	#4	11-3	4	#4	11-9	4	#4	12-3	4	#4	12-9	5	#4	13-3
f3	str	3	#4	9-9	3	#4	10-3	3	#4	10-9	4	#4	11-0	4	#4	11-6	4	#4	12-0	4	#4	12-6	4	#4	13-0	4	#4	13-6	4	#4	14-0
f4	str	3	#4	10-3	3	#4	10-9	3	#4	11-3	3	#4	11-9	3	#4	12-3	4	#4	12-6	4	#4	13-0	4	#4	13-9	4	#4	14-0	4	#4	14-6
f5	str	4	#4	8-3	4	#4	8-6	4	#4	9-0	4	#4	9-3	4	#4	9-9	4	#4	10-3	4	#4	10-6	4	#4	10-9	4	#4	11-3	4	#4	11-9
f6	str	4	#4	9-3	4	#4	9-6	4	#4	9-9	4	#4	10-3	3	#4	10-6	3	#4	11-0	4	#4	11-6	4	#4	11-9	4	#4	12-3	4	#4	12-6
f7	str	3	#4	10-3	3	#4	10-6	4	#4	10-9	4	#4	11-3	3	#4	11-3	3	#4	12-0	3	#4	12-6	3	#4	12-9	4	#4	13-3	4	#4	13-6
f8	str													3	#4	12-6	3	#4	12-3	3	#4	13-3	3	#4	13-6	3	#4	14-3	3	#4	14-6
m1	str	3	#4	20-6	3	#4	21-6	3	#4	22-3	3	#4	23-0	4	#4	24-0	4	#4	25-9	4	#4	26-6	4	#4	27-3	4	#4	28-3	4	#4	29-0
m2	str	1	#4	20-6	1	#4	21-6	1	#4	22-3	1	#4	23-0	1	#4	24-0	1	#4	25-9	1	#4	26-6	1	#4	27-3	1	#4	28-3	1	#4	29-0
m3	str	3	#4	19-6	3	#4	20-6	3	#4	21-6	3	#4	22-6	4	#4	23-3	4	#4	24-3	4	#4	25-3	4	#4	26-3	4	#4	27-3	4	#4	28-3
m4	str	1	#4	19-6	1	#4	20-6	1	#4	21-6	1	#4	22-6	1	#4	23-3	1	#4	24-3	1	#4	25-3	1	#4	26-3	1	#4	27-3	1	#4	28-3
n1	str	3	#4	15-9	3	#4	16-9	3	#4	17-6	3	#4	18-6	4	#4	19-6	4	#4	20-3	4	#4	21-0	4	#4	21-9	4	#4	22-9	4	#4	23-6
n2	str	1	#4	15-9	1	#4	16-9	1	#4	17-6	1	#4	18-6	1	#4	19-6	1	#4	20-3	1	#4	21-0	1	#4	21-9	1	#4	22-9	1	#4	23-6
p	str	4	#5	11-9	4	#5	12-6	4	#5	13-0	4	#5	13-6	4	#5	14-3	4	#5	14-6	4	#5	15-6	4	#5	16-0	4	#5	16-6	4	#5	17-0
q	str	2	#6	13-9	2	#6	14-6	2	#6	15-0	2	#6	15-6	2	#6	16-3	2	#6	16-6	2	#6	17-6	2	#6	18-0	2	#6	18-6	2	#6	19-0
g	str	2	#4	9-9	2	#4	10-3	2	#4	10-9	2	#4	11-6	2	#4	12-0	2	#4	12-6	2	#4	13-0	2	#4	13 6	2	#4	14-0	2	#4	14-6
u	B	7	#4	4-6	8	#4	4-6	8	#4	4-6	8	#4	4-9	9	#4	4-9	9	#4	4-9	9	#4	4-9	10	#4	5-0	10	#4	5-0	10	#4	5-0
v	str	1	#4	18-6	1	#4	19-9	1	#4	20-3	1	#4	21-3	1	#4	22-0	1	#4	22-6	1	#4	23-3	1	#4	24-9	1	#4	24-9	1	#4	25-6
w	str	1	#4	15-0	1	#4	15-9	1	#4	16-3	1	#4	17-3	1	#4	17-9	1	#4	18-6	1	#4	19-3	1	#4	20-9	1	#4	20-9	1	#4	21-6

Pipe Dia	DIMENSIONS																		
	A	B	C	D	E	F	G	H	J	K	L	M	N	P	R	S	T	V	W	X
90"	0-3	2-1	2-4	0-8	5-1	18-3	5-6	9-6	7-6	20-8 1/2	6-11 1/2	5-1 1/4	0-4	9-6	15-0	7-0	20-0	4-5	6-6	5-8
96"	0-1 1/2	2-2	2-6	0-8	5-4	19-0	5-9	10-0	8-0	21-6 1/4	7-3 1/4	5-3 7/8	0-3	9-11	15-9	7-5	20-11	4-7	6-9	5-11
102"	0-6	2-3	2-8	0-8	5-7	19-9	6-1	10-6	8-4	22-3 7/8	7-7 7/8	5-7 1/2	0-2	10-5	16-6	7-9	21-10	4-10	7-1	6-3
108"	0-4 1/2	2-2	2-10	0-10	5-10	20-6	6-4	11-0	8-10	23-2 3/8	8-0 3/8	5-10 7/8	0-6	11-0	17-3	8-1	22-11	5-2	7-4	6-6
114"	0-3	2-3	3-0	0-10	6-1	21-3	6-8	11-6	9-3	24-0 1/8	8-5 1/8	6-2 1/2	0-4	11-6	18-0	8-6	23-10	5-5	7-8	6-10
120"	0-1 1/2	2-4	3-0	1-0	6-4	22-0	6-11	12-0	9-8	24-9 7/8	8-8 7/8	6-5 1/8	0-3	11-11	18-9	8-11	24-9	5-7	7-11	7-1
126"	0-6	2-7	3-0	1-0	6-7	22-9	7-3	12-6	10-0	25-7 5/8	9-1 5/8	6-8 3/4	0-2	12-5	19-6	9-3	25-8	5-10	8-5	7-8 1/8
132"	0-4 1/2	2-8	3-2	1-0	6-10	23-6	7-6	13-0	10-6	26-5 1/4	9-5 1/4	6-11 1/2	0-6	12-10	20-3	9-7	26-7	6-0	8-8	7-11 1/8
138"	0-3	2-8	3-5	1-0	7-1	24-3	7-10	13-6	10-11	27-3 3/8	9-10 3/8	7-3 1/2	0-4	13-5	21-0	10-0	27-7	6-4	9-0	8-3 1/8
144"	0-1 1/2	2-8	3-8	1-0	7-4	25-0	8-1	14-0	11-4	28-1 1/2	10-2 1/2	7-6 1/2	0-3	13-11	21-9	10-5	28-7	6-7	9-3	8-6 1/8

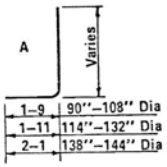

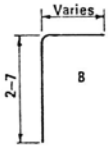

BENDS

QUANTITIES

Pipe Dia.	Reinf. (lbs)	Conc. (CY)
90"	1430	28.92
96"	1780	31.55
102"	1995	34.33
108"	2220	37.18
114"	2615	40.26
120"	2985	43.12
126"	3370	49.49
132"	3720	52.99
138"	4150	56.89
144"	4600	60.74

NOTE:
Quantities and steel list shown are for one headwall.

Registered Professional Engineer (Civil) CERTIFICATE EXPIRES DEC. 31, 19 — ARIZONA, U.S.A.

DESIGN APPROVED	ARIZONA DEPARTMENT OF TRANSPORTATION HIGHWAYS DIVISION STANDARD DRAWINGS	REVISION
APPROVED FOR DISTRIBUTION	INLET AND OUTLET HEADWALLS 30° SKEW PIPE CULVERT 6:1 SLOPE	STANDARD NO. B-14.40

DESIGN	K W	9-72	DRAWN	LAM	9-72	CHECKED	RLC	9-72

DESIGN	K. W.	9-72	NO.	DESCRIPTION OF REVISIONS	MADE BY	DATE
DRAWN	G. H.	9-72	1	Revised ℄ of pipe.	WSK:sea	2-11-75
CHECKED	R.L.C.	9-72	2	Wall Thicknesses	G.H.	7-14-76
			3			

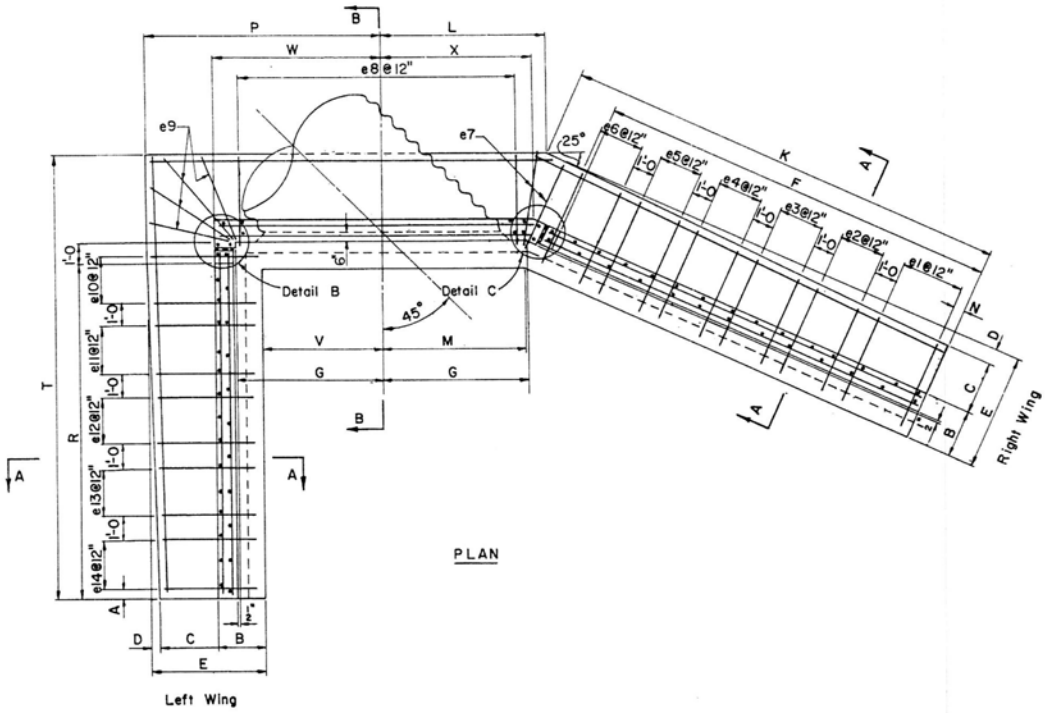

PLAN

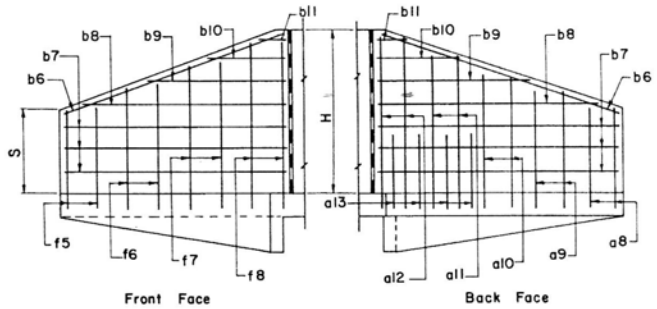

LEFT WING ELEVATION

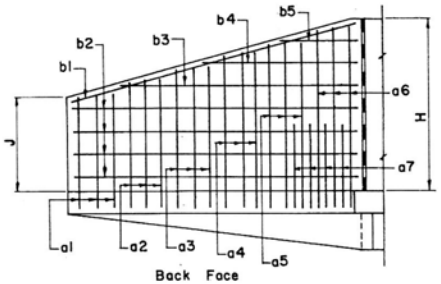

RIGHT WING ELEVATION

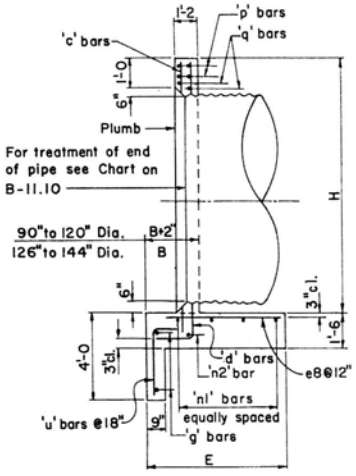

SECTION B-B

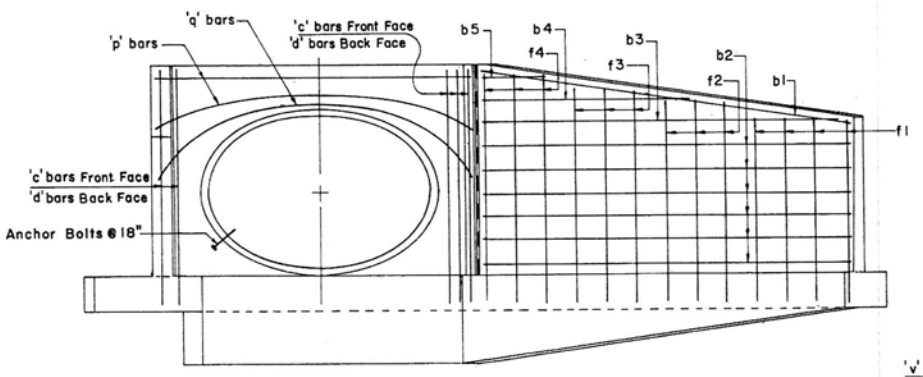

ELEVATION

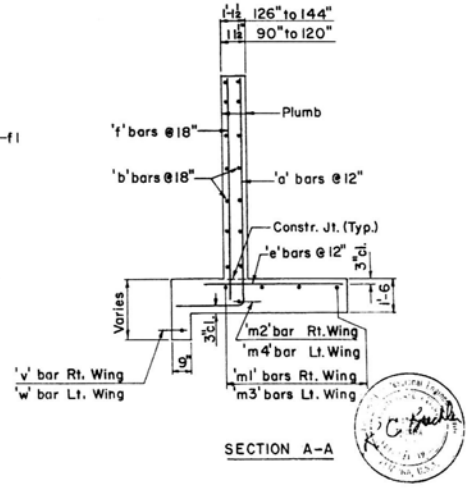

SECTION A-A

Notes: For General Notes and Misc. Details see B-11.10.
For steel list and bend diagrams see B-15.20, B-15.30 or B-15.40.

DESIGN APPROVED	ARIZONA DEPARTMENT OF TRANSPORTATION HIGHWAYS DIVISION STANDARD DRAWINGS	REVISION
APPROVED FOR DISTRIBUTION	INLET & OUTLET HEADWALLS 45° SKEW PIPE CULVERT	STANDARD NO. B-15.10

STEEL LIST

Mark	Bend	90" Dia			96" Dia			102" Dia			108" Dia			114" Dia			120" Dia			126" Dia			132" Dia			138" Dia			144" Dia		
		No	Size	Lgth	No	Size	Lgth	No	Size	Lgth	No	Size	Lgth	No	Size	Lgth	No	Size	Lgth	No	Size	Lgth	No	Size	Lgth	No	Size	Lgth	No	Size	Lgth
a1	A	4	#4	9-3	4	#5	9-6	4	#5	9-9	4	#5	10-3	4	#5	10-9	4	#6	11-0	4	#6	11-3	4	#7	11-9	4	#7	12-0	4	#7	12-3
a2	A	4	#5	10-0	4	#5	10-3	4	#6	10-6	4	#6	11-0	4	#6	11-6	4	#7	11-9	4	#7	12-0	4	#7	12-6	4	#8	13-0	4	#8	13-3
a3	A	4	#6	10-9	3	#6	11-0	4	#7	11-6	4	#7	11-9	4	#7	12-3	4	#7	12-9	4	#7	13-0	4	#8	13-3	4	#8	13-9	4	#8	14-0
a4	A	4	#7	11-3	3	#7	11-9	3	#7	12-3	4	#7	12-6	4	#7	13-0	3	#7	13-6	4	#7	13-9	4	#8	14-3	4	#8	14-9	4	#8	15-0
a5	A				3	#7	12-6	3	#7	13-0	3	#7	13-6	4	#7	13-9	3	#7	14-0	3	#7	14-6	3	#8	15-0	4	#8	15-6	4	#8	15-9
a6	A																2	#7	14-6	2	#7	15-3	3	#8	15-6	3	#8	16-3	4	#8	16-9
a7	A										3	#4	6-0	7	#5	6-0	11	#5	6-0	12	#6	6-0	9	#5	7-0	10	#5	7-0	15	#6	7-0
a8	A	3	#4	7-9	3	#4	8-0	3	#4	8-3	3	#4	8-6	3	#4	9-0	3	#4	9-3	3	#4	9-6	3	#5	9-9	3	#5	10-0	3	#5	10-3
a9	A	3	#5	9-3	3	#5	9-6	3	#5	9-9	3	#5	10-0	3	#5	10-6	3	#6	10-9	3	#6	11-0	3	#6	11-3	3	#6	11-6	3	#6	11-9
a10	A	2	#6	10-9	3	#6	11-0	3	#6	11-3	3	#6	11-6	2	#6	12-0	3	#7	12-3	3	#7	12-6	3	#7	12-9	3	#7	13-0	3	#8	13-3
a11	A	2	#6	11-6	2	#7	12-6	2	#7	12-9	3	#7	13-0	2	#7	13-3	2	#7	13-6	2	#7	13-9	3	#8	14-3	3	#8	14-9	3	#8	14-9
a12	A													2	#7	14-3	2	#7	14-9	2	#7	15-3	2	#8	15-9	2	#8	16-0	3	#8	16-3
a13	A													3	#4	6-0	4	#4	6-0	4	#4	6-0	4	#4	7-0	4	#4	7-0	8	#4	7-0
b1	str	2	#4	15-9	2	#4	16-9	2	#4	17-6	2	#4	18-3	2	#4	19-3	2	#4	20-0	2	#4	20-9	2	#4	21-9	2	#4	22-6	2	#4	23-3
b2	str	8	#4	15-6	10	#4	16-6	10	#4	17-3	10	#4	18-0	10	#4	19-0	12	#4	19-9	12	#4	20-6	12	#4	21-6	12	#4	22-3	12	#4	23-0
b3	str	2	#4	15-3	2	#4	10-0	2	#4	12-3	2	#4	15-3	2	#4	17-3	2	#4	12-9	2	#4	14-6	2	#4	17-6	2	#4	20-0	2	#4	22-0
b4	str	2	#4	8-3	2	#4	3-3	2	#4	5-3	2	#4	8-0	2	#4	10-3	2	#4	5-6	2	#4	7-9	2	#4	10-3	2	#4	12-9	2	#4	15-0
b5	str													2	#4	3-0							2	#4	3-0	2	#4	5-6	2	#4	8-0
b6	str	2	#4	10-3	2	#4	10-9	2	#4	11-3	2	#4	11-9	2	#4	12-3	2	#4	12-9	2	#4	13-3	2	#4	14-0	2	#4	14-6	2	#4	15-0
b7	str	8	#4	9-6	8	#4	10-0	8	#4	10-6	8	#4	11-0	8	#4	11-6	8	#4	12-0	10	#4	12-6	10	#4	13-0	10	#4	13-6	10	#4	14-0
b8	str	2	#4	6-6	2	#4	7-6	2	#4	8-6	2	#4	9-6	2	#4	10-6	2	#4	11-6	2	#4	9-6	2	#4	10-6	2	#4	11-3	2	#4	12-3
b9	str	2	#4	3-6	2	#4	4-6	2	#4	5-6	2	#4	6-6	2	#4	7-6	2	#4	8-6	2	#4	6-6	2	#4	7-6	2	#4	8-3	2	#4	9-3
b10	str				2	#4	1-6	2	#4	2-6	2	#4	3-6	2	#4	4-6	2	#4	5-6	2	#4	3-3	2	#4	4-6	2	#4	5-3	2	#4	6-6
b11	str													2	#4	1-6	2	#4	2-6				2	#4	1-3	2	#4	2-3	2	#4	3-3
c	str	5	#4	10-6	5	#4	11-0	5	#4	11-6	5	#4	12-0	5	#4	12-6	5	#4	13-0	5	#4	13-6	5	#4	14-0	5	#4	14-6	5	#4	15-0
d	A	6	#6	12-3	6	#6	12-9	6	#7	13-3	6	#7	13-9	6	#7	14-6	6	#7	15-0	6	#7	15-6	6	#7	16-0	6	#7	16-6	6	#7	17-0
e1	str	4	#4	3-0	4	#4	3-0	4	#4	3-3	4	#4	3-3	4	#4	3-6	4	#4	3-6	4	#4	3-6	4	#4	3-9	4	#4	3-9	4	#5	4-0
e2	str	4	#4	3-3	4	#4	3-3	4	#4	3-6	4	#4	3-6	4	#4	3-9	4	#4	3-9	4	#4	4-0	4	#5	4-0	4	#5	4-0	4	#5	4-6
e3	str	3	#4	3-6	3	#4	3-9	4	#4	3-9	4	#5	4-0	4	#5	4-0	4	#5	4-3	4	#5	4-3	4	#5	4-6	4	#6	4-6	4	#6	4-9
e4	str	3	#4	3-9	3	#4	4-0	3	#5	4-3	4	#5	4-6	4	#5	4-3	3	#5	4-6	4	#6	4-6	4	#6	5-0	4	#6	5-0	4	#7	5-0
e5	str	3	#4	4-0	3	#5	4-3	3	#5	4-6	3	#5	4-9	4	#6	4-9	3	#6	4-9	3	#6	5-0	3	#7	5-3	4	#7	5-6	4	#7	5-6
e6	str																3	#6	5-0	3	#7	5-6	3	#7	5-6	3	#7	5-9	4	#8	6-0
e7	str	2	#4	4-3	2	#5	4-6	2	#5	4-9	2	#5	5-0	2	#6	5-3	2	#6	5-6	2	#7	5-9	2	#7	6-0	2	#7	6-3	2	#8	6-6
e8	str	14	#4	4-3	14	#5	4-6	15	#5	4-9	15	#5	5-0	16	#6	5-3	16	#6	5-6	17	#7	5-9	17	#7	6-0	18	#7	6-3	19	#8	6-6
e9	str	4	#4	4-3	4	#5	4-6	4	#5	4-9	4	#5	5-0	4	#6	5-3	4	#6	5-6	4	#7	5-9	4	#7	6-0	4	#7	6-3	4	#8	6-6
e10	str	2	#4	4-3	2	#5	4-6	3	#5	4-9	3	#5	4-9	2	#6	5-3	2	#6	5-6	2	#7	5-9	2	#7	6-0	3	#7	6-3	3	#8	6-6
e11	str	3	#4	3-9	3	#4	4-0	3	#4	4-3	3	#5	4-3	2	#5	4-9	2	#6	5-0	3	#6	5-0	3	#6	5-3	3	#7	5-6	3	#7	5-9
e12	str	3	#4	3-3	3	#4	3-6	3	#4	3-9	3	#4	3-9	3	#5	4-3	3	#5	4-6	3	#5	4-6	3	#5	4-9	3	#5	5-0	3	#6	5-3
e13	str	3	#4	3-0	3	#4	3-0	3	#4	3-3	3	#4	3-3	3	#4	4-0	3	#4	4-0	3	#4	4-0	3	#4	4-3	3	#4	4-3	3	#5	4-6
e14	str													3	#4	3-6	3	#4	3-6	3	#4	3-6	3	#4	3-9	3	#4	3-9	3	#4	4-0
f1	str	4	#4	7-6	4	#4	7-9	4	#4	8-3	4	#4	8-6	4	#4	8-9	4	#4	9-0	4	#4	9-6	4	#4	9-9	4	#4	10-0	4	#4	10-6
f2	str	4	#4	8-9	4	#4	9-0	4	#4	9-6	3	#4	9-6	4	#4	9-9	4	#4	10-3	4	#4	10-6	4	#4	11-0	4	#4	11-3	4	#4	11-9
f3	str	3	#4	10-0	4	#4	10-3	4	#4	11-3	3	#4	10-6	3	#4	11-0	3	#4	11-6	4	#4	11-9	4	#4	12-3	4	#4	12-6	4	#4	13-3
f4	str										3	#4	11-6	3	#4	11-9	3	#4	12-6	3	#4	13-0	3	#4	13-6	4	#4	13-9	4	#4	14-6
f5	str	3	#4	6-0	3	#4	6-3	3	#4	6-6	3	#4	6-9	3	#4	7-0	3	#4	7-3	3	#4	7-6	3	#4	7-9	3	#4	8-0	3	#4	8-3
f6	str	2	#4	8-0	3	#4	8-6	3	#4	8-9	3	#4	9-3	2	#4	9-0	2	#4	9-6	2	#4	10-0	3	#4	10-0	3	#4	10-3	3	#4	10-9
f7	str	2	#4	10-0	2	#4	10-9	2	#4	11-0	2	#4	11-6	2	#4	10-9	2	#4	11-0	2	#4	11-6	2	#4	12-3	2	#4	12-6	2	#4	13-0
f8	str													2	#4	12-3	2	#4	12-6	2	#4	13-0	2	#4	13-9	2	#4	14-0	2	#4	14-6
m1	str	3	#4	17-0	3	#4	18-0	3	#4	18-9	3	#4	19-9	4	#4	20-9	4	#4	21-6	4	#4	22-6	4	#4	23-3	4	#4	24-0	4	#4	25-0
m2	str	1	#4	17-0	1	#4	18-0	1	#4	18-9	1	#4	19-9	1	#4	20-9	1	#4	21-6	1	#4	22-6	1	#4	23-3	1	#4	24-0	1	#4	25-0
m3	str	3	#4	14-0	3	#4	14-9	3	#4	15-6	3	#4	16-3	4	#4	17-0	4	#4	17-6	4	#4	18-3	4	#4	19-0	4	#4	19-9	4	#4	20-6
m4	str	1	#4	14-0	1	#4	14-9	1	#4	15-6	1	#4	16-3	1	#4	17-0	1	#4	17-6	1	#4	18-3	1	#4	19-0	1	#4	19-9	1	#4	20-6
n1	str	3	#4	17-6	3	#4	18-6	3	#4	19-6	3	#4	20-3	4	#4	21-6	4	#4	22-3	4	#4	23-3	4	#4	24-3	4	#4	25-3	4	#4	26-3
n2	str	1	#4	17-6	1	#4	18-6	1	#4	19-6	1	#4	20-3	1	#4	21-6	1	#4	22-3	1	#4	23-3	1	#4	24-3	1	#4	25-3	1	#4	26-3
p	str	4	#5	13-0	4	#5	13-9	4	#5	14-3	4	#5	15-0	4	#5	15-9	4	#5	16-6	4	#5	17-3	4	#5	17-9	4	#5	18-9	4	#5	19-3
q	str	2	#6	15-0	2	#6	15-9	2	#6	16-3	2	#6	17-0	2	#6	17-9	2	#6	18-6	2	#6	19-3	2	#6	19-9	2	#6	20-9	2	#6	21-3
g	str	2	#4	12-3	2	#4	12-9	2	#4	13-6	2	#4	14-0	2	#4	14-9	2	#4	15-6	2	#4	16-0	2	#4	16-9	2	#4	17-6	2	#4	18-0
u	B	9	#4	4-6	9	#4	4-6	10	#4	4-6	10	#4	4-9	10	#4	4-9	11	#4	4-9	11	#4	4-9	12	#4	5-0	12	#4	5-0	13	#4	5-0
v	str	1	#4	16-9	1	#4	17-6	1	#4	18-3	1	#4	19-0	1	#4	19-9	1	#4	20-6	1	#4	21-9	1	#4	22-6	1	#4	23-3	1	#4	24-0
w	str	1	#4	9-6	1	#4	9-9	1	#4	10-3	1	#4	10-9	1	#4	11-3	1	#4	11-9	1	#4	12-6	1	#4	13-0	1	#4	13-3	1	#4	14-0

Pipe Dia	DIMENSIONS																			
	A	B	C	D	E	F	G	H	J	K	L	M	N	P	R	S	T	V	W	X
90"	0-6	2-1	2-2	0-10	5-1	15-6	6-6	9-6	6-3	17-4 5/8	7-4 5/8	6-3 1/8	0-6	10-6	9 6	4-9	14-6	5-5	7-6	6-4 3/8
96"	0-3	2-2	2-2	1-0	5-4	16-4	6-10	10-0	6-7	18-3 1/8	7-9 1/8	6-6 7/8	0-5	11-0	10-0	5-0	15-2	5-8	7-10	6-8 3/8
102"	0-6	2-2	2-4	1-1	5-7	17-2	7-2	10-6	6-11	19-1 3/4	8-1 3/4	6-10 7/8	0-4	11-7	10-6	5-3	15-11	6-0	8-2	7-0 3/8
108"	0-3	2-3	2-3	1-4	5-10	18-0	7-6	11-0	7-3	20-0 1/4	8-6 1/4	7-2 5/8	0-3	12-1	11-0	5-6	16-7	6-3	8-6	7-4 3/8
114"	0-6	2-3	2-4	1-6	6-1	18-10	7-11	11-6	7-6	20-10 7/8	8-11 7/8	7-7 5/8	0-2	12-9	11-6	5-9	17-4	6-8	8-11	7-9 3/8
120"	0-3	2-4	2-5	1-7	6-4	19-8	8-3	12-0	7-10	21-9 1/4	9-4 1/4	7-11 1/2	0-7	13-3	12-0	6-0	18-0	6-11	9-3	8-1 3/8
126"	0-6	2-6	2-4	1-9	6-7	20-6	8-7	12-6	8-2	22-8	9-9	8-3 1/2	0-6	13-10	12-6	6-3	18-9	7-3	9-9	8-10 1/8
132"	0-3	2-7	2-6	1-9	6-10	21-4	8-11	13-0	8-6	23-6 3/8	10-1 1/2	8-7 1/4	0-5	14-4	13-0	6-6	19-5	7-6	10-1	9-2 1/8
138"	0-6	2-7	2-7	1-11	7-1	22-2	9-4	13-6	8-10	24-5	10-7 1/8	9-0 1/4	0-4	15-0	13-6	6-9	20-2	7-11	10-6	9-7 1/8
144"	0-3	2-8	2-8	2-0	7-4	23-0	9-8	14-0	9-2	25-3 1/2	10-11 1/2	9-4	0-3	15-6	14-0	7-0	20-10	8-2	10-10	9-11 1/8

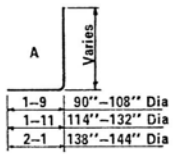

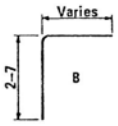

BENDS

QUANTITIES

Pipe Dia.	Reinf. (lbs)	Conc. (CY)
90"	1215	23.99
96"	1415	26.13
102"	1605	28.52
108"	1765	30.78
114"	2080	33.40
120"	2305	35.99
126"	2585	41.02
132"	2945	44.05
138"	3210	47.29
144"	3705	50.47

NOTE:

Quantities and steel list shown are for one headwall.

Registered Professional Engineer (Civil) CERTIFICATE EXPIRES DEC. 31, 19 ARIZONA, U.S.A.

DESIGN APPROVED	ARIZONA DEPARTMENT OF TRANSPORTATION HIGHWAYS DIVISION STANDARD DRAWINGS	REVISION
APPROVED FOR DISTRIBUTION	INLET AND OUTLET HEADWALLS 45° SKEW PIPE CULVERT 2:1 SLOPE	STANDARD NO. B-15.20

DESIGN	K W	9-72	DRAWN	LAM	9-72	CHECKED	RLC	9-72

STEEL LIST

Mark	Bend	90" Dia			96" Dia			102" Dia			108" Dia			114" Dia			120" Dia			126" Dia			132" Dia			138" Dia			144" Dia		
		No	Size	Lgth	No	Size	Lgth	No	Size	Lgth	No	Size	Lgth	No	Size	Lgth	No	Size	Lgth	No	Size	Lgth	No	Size	Lgth	No	Size	Lgth	No	Size	Lgth
a1	A	4	#5	10-6	4	#5	11-0	4	#6	11-6	4	#6	12-0	4	#6	12-6	5	#7	13-0	5	#7	13-3	5	#8	13-9	5	#8	14-3	5	#8	14-9
a2	A	4	#5	11-0	4	#6	11-6	4	#6	12-0	4	#6	12-6	4	#7	13-0	4	#7	13-6	5	#8	13-9	5	#8	14-3	5	#8	14-9	5	#8	15-3
a3	A	3	#6	11-6	4	#6	11-9	4	#6	12-3	4	#7	12-9	4	#7	13-3	4	#7	13-9	4	#8	14-3	5	#8	14-9	5	#8	15-3	5	#8	15-9
a4	A	3	#6	11-9	3	#6	12-3	4	#7	12-9	4	#7	13-3	4	#7	13-9	4	#8	14-3	4	#8	14-9	4	#8	15-3	5	#8	15-9	5	#8	16-3
a5	A	3	#6	12-3	3	#7	12-6	3	#7	13-3	3	#7	13-6	4	#8	14-0	4	#8	14-6	4	#8	15-3	4	#8	15-9	4	#8	16-3	4	#8	16-9
a6	A																														
a7	A																			3	#4	7-0	12	#4	6-6	13	#4	8-3	18	#4	8-9
a8	A	3	#4	9-0	3	#4	9-6	4	#5	9-9	4	#5	10-0	4	#6	10-9	4	#6	11-0	4	#6	11-3	4	#6	11-9	4	#6	12-0	4	#7	12-6
a9	A	3	#4	9-9	3	#5	10-3	3	#5	10-9	4	#6	11-0	4	#6	11-6	4	#6	11-9	4	#7	12-3	4	#7	12-6	4	#7	13-0	4	#7	13-6
a10	A	3	#5	10-6	3	#6	11-0	3	#6	11-6	3	#7	12-0	3	#7	12-6	4	#7	13-0	4	#8	13-3	4	#8	13-6	4	#8	14-0	4	#8	14-6
a11	A	3	#6	11-3	3	#6	11-9	3	#7	12-3	3	#7	12-9	3	#7	13-6	3	#8	14-0	3	#8	14-3	4	#8	14-6	4	#8	15-0	4	#8	15-6
a12	A	2	#6	11-9	3	#7	12-3	3	#7	12-9	2	#7	13-3	3	#8	14-0	2	#8	14-6	3	#8	15-3	3	#8	15-6	3	#8	16-0	4	#8	16-6
a13	A																			2	#4	7-0	6	#4	6-6	6	#4	7-3	7	#4	7-9
b1	str	2	#4	16-6	2	#4	17-3	2	#4	18-0	2	#4	18-9	2	#4	19-6	2	#4	20-3	2	#4	21-3	2	#4	22-0	2	#4	23-0	2	#4	23-9
b2	str	10	#4	16-3	12	#4	17-0	12	#4	17-9	12	#4	18-6	14	#4	19-3	14	#4	20-0	14	#4	21-0	14	#4	21-9	16	#4	22-9	16	#4	23-6
b3	str	2	#4	15-3	2	#4	6-6	2	#4	10-6	2	#4	15-6	2	#4	5-6	2	#4	10-6	2	#4	15-0	2	#4	19-6	2	#4	10-6	2	#4	15-0
b4	str																						2	#4	5-9						
b5	str																														
b6	str	2	#4	13-6	2	#4	14-0	2	#4	14-9	2	#4	15-6	2	#4	16-0	2	#4	16-6	2	#4	17-3	2	#4	18-0	2	#4	18-6	2	#4	19-0
b7	str	8	#4	13-6	10	#4	14-0	10	#4	14-9	10	#4	15-6	10	#4	16-0	12	#4	16-6	12	#4	17-3	12	#4	18-0	12	#4	18-6	12	#4	19-0
b8	str	2	#4	12-9	2	#4	8-9	2	#4	10-9	2	#4	12-9	2	#4	14-6	2	#4	10-9	2	#4	12-6	2	#4	14-6	2	#4	16-6	2	#4	18-6
b9	str	2	#4	6-9	2	#4	2-9	2	#4	4-9	2	#4	8-9	2	#4	8-6	2	#4	4-9	2	#4	6-6	2	#4	8-9	2	#4	10-9	2	#4	12-6
b10	str													2	#4	2-6							2	#4	2-6	2	#4	4-6	2	#4	6-9
b11	str																														
c	str	5	#4	10-6	5	#4	11-0	5	#4	11-6	5	#4	12-0	5	#4	12-6	5	#4	13-0	5	#4	13-6	5	#4	14-0	5	#4	14-6	5	#4	15-0
d	A	6	#6	12-3	6	#6	12-9	6	#7	13-3	6	#7	13-9	6	#7	14-6	6	#7	15-0	6	#7	15-6	6	#7	16-0	6	#7	16-6	6	#7	17-0
e1	str	5	#4	3-3	4	#4	3-6	5	#4	3-6	5	#4	3-9	5	#5	4-0	5	#5	4-0	5	#5	4-3	5	#5	4-3	5	#6	4-9	5	#6	5-0
e2	str	4	#4	3-6	5	#4	3-9	5	#4	3-9	5	#5	4-0	5	#5	4-3	4	#5	4-3	5	#5	4-6	5	#6	4-6	5	#6	5-0	5	#6	5-3
e3	str	4	#4	3-9	5	#4	4-0	5	#5	4-0	5	#5	4-3	5	#5	4-6	4	#5	4-6	4	#6	4-9	5	#6	5-0	5	#7	5-3	5	#7	5-6
e4	str	4	#4	4-0	4	#5	4-3	4	#5	4-3	5	#5	4-6	5	#6	4-9	4	#6	4-9	4	#6	5-0	4	#7	5-3	5	#7	5-6	5	#7	5-9
e5	str																4	#6	5-0	4	#7	5-3	4	#7	5-6	4	#7	5-9	5	#8	6-0
e6	str																														
e7	str	2	#4	4-3	2	#5	4-6	2	#5	4-9	2	#5	5-0	2	#6	5-0	2	#6	5-3	2	#7	5-6	2	#7	5-9	2	#7	6-0	2	#8	6-3
e8	str	13	#4	4-3	14	#5	4-6	15	#5	4-9	15	#5	5-0	16	#6	5-0	17	#6	5-3	17	#7	5-6	18	#7	5-9	19	#7	6-0	20	#8	6-3
e9	str	4	#4	4-3	4	#5	4-6	4	#5	4-9	4	#5	5-0	4	#6	5-0	4	#6	5-3	4	#7	5-6	4	#7	5-9	4	#7	6-0	4	#8	6-3
e10	str	5	#4	4-0	5	#5	4-3	5	#5	4-6	5	#5	4-9	4	#6	4-9	3	#6	5-3	3	#7	5-3	3	#7	5-6	4	#7	5-9	4	#8	6-0
e11	str	5	#4	3-9	5	#4	3-9	5	#4	4-3	4	#5	4-6	4	#5	4-6	3	#6	5-0	3	#6	5-0	4	#6	5-3	4	#7	5-6	4	#7	5-9
e12	str	5	#4	3-3	5	#4	3-6	6	#4	3-9	4	#4	4-3	4	#4	4-3	4	#5	4-9	4	#5	4-9	4	#6	5-0	4	#6	5-3	4	#6	5-6
e13	str										4	#4	3-9	5	#4	4-0	4	#4	4-6	4	#4	4-6	4	#5	4-9	4	#5	5-0	4	#5	5-3
e14	str																4	#4	4-3	4	#4	4-3	4	#4	4-6	4	#4	4-9	4	#4	5-0
f1	str	4	#4	8-9	4	#4	9-3	4	#4	9-9	4	#4	10-3	4	#4	10-6	4	#4	11-0	4	#4	11-3	4	#4	11-9	4	#4	12-3	5	#4	12-6
f2	str	4	#4	9-6	4	#4	10-0	3	#4	10-6	3	#4	10-9	4	#4	11-3	4	#4	11-9	4	#4	12-0	4	#4	12-6	4	#4	12-9	4	#4	13-3
f3	str	4	#4	10-3	4	#4	10-9	3	#4	11-0	3	#4	11-3	3	#4	11-9	3	#4	12-3	4	#4	12-9	4	#4	13-3	4	#4	13-6	4	#4	14-0
f4	str							3	#4	11-3	3	#4	11-9	3	#4	12-3	3	#4	12-9	3	#4	13-3	3	#4	13-9	4	#4	14-3	4	#4	14-9
f5	str	4	#4	7-3	4	#4	7-9	4	#4	8-0	4	#4	8-6	3	#4	8-9	3	#4	9-0	3	#4	9-6	4	#4	9-9	4	#4	10-0	4	#4	10-6
f6	str	3	#4	8-9	3	#4	9-3	4	#4	9-6	4	#4	10-0	3	#4	9-9	3	#4	10-3	3	#4	10-6	3	#4	11-3	3	#4	11-6	4	#4	12-0
f7	str	3	#4	10-0	3	#4	10-9	3	#4	11-0	3	#4	11-6	3	#4	10-9	3	#4	11-3	3	#4	11-9	3	#4	12-3	3	#4	12-9	3	#4	13-6
f8	str													3	#4	12-0	3	#4	12-6	3	#4	12-9	3	#4	13-6	3	#4	13-9	3	#4	14-6
m1	str	3	#4	17-9	3	#4	18-6	3	#4	19-3	3	#4	20-3	3	#4	21-0	3	#4	21-9	3	#4	22-9	4	#4	23-9	4	#4	24-9	4	#4	25-6
m2	str	1	#4	17-9	1	#4	18-6	1	#4	19-3	1	#4	20-3	1	#4	21-0	1	#4	21-9	1	#4	22-9	1	#4	23-9	1	#4	24-9	1	#4	25-6
m3	str	3	#4	18-3	3	#4	18-9	3	#4	19-9	3	#4	20-9	3	#4	21-6	3	#4	22-3	3	#4	23-3	4	#4	24-0	4	#4	24-9	4	#4	26-6
m4	str	1	#4	18-3	1	#4	18-9	1	#4	19-9	1	#4	20-9	1	#4	21-6	1	#4	22-3	1	#4	23-3	1	#4	24-0	1	#4	24-9	1	#4	26-6
n1	str	3	#4	17-9	3	#4	18-6	3	#4	19-6	3	#4	20-6	3	#4	21-6	3	#4	22-3	3	#4	23-3	4	#4	24-0	4	#4	25-0	4	#4	26-0
n2	str	1	#4	17-9	1	#4	18-6	1	#4	19-6	1	#4	20-6	1	#4	21-6	1	#4	22-3	1	#4	23-3	1	#4	24-0	1	#4	25-0	1	#4	26-0
p	str	4	#5	13-9	4	#5	14-6	4	#5	15-3	4	#5	15-9	4	#5	16-6	4	#5	17-3	4	#5	18-0	4	#5	18-9	4	#5	19-6	4	#5	20-3
q	str	2	#6	14-9	2	#6	15-6	2	#6	16-3	2	#6	16-9	2	#6	17-6	2	#6	18-3	2	#6	19-0	2	#6	19-9	2	#6	20-6	2	#6	21-3
g	str	2	#4	12-0	2	#4	12-6	2	#4	13-0	2	#4	13-6	2	#4	14-6	2	#4	15-3	2	#4	15-9	2	#4	16-3	2	#4	17-3	2	#4	17-9
u	B	9	#4	4-0	9	#4	4-0	10	#4	4-0	10	#4	4-0	10	#4	4-3	11	#4	4-3	11	#4	4-3	12	#4	4-3	12	#4	4-6	13	#4	4-6
v	str	1	#4	17-0	1	#4	17-9	1	#4	18-9	1	#4	19-6	1	#4	20-0	1	#4	20-9	1	#4	21-9	1	#4	22-6	1	#4	23-6	1	#4	24-3
w	str	1	#4	14-0	1	#4	14-6	1	#4	15-0	1	#4	15-6	1	#4	16-3	1	#4	16-9	1	#4	17-6	1	#4	17-9	1	#4	18-6	1	#4	19-0

Pipe Dia	DIMENSIONS																			
	A	B	C	D	E	F	G	H	J	K	L	M	N	P	R	S	T	V	W	X
90"	0-6	2-1	2-4	0-8	5-1	16-3	6-6	9-6	7-9	18-1 5/8	7-4 5/8	6-3 1/8	0-4	10-6	13-6	6-2	18-6	5-5	7-6	6-4 3/8
96"	0-3	2-2	2-6	0-8	5-4	17-0	6-10	10-0	8-2	18-11 1/8	7-9 1/8	6-6 7/8	0-3	11-0	14-0	6-6	19-2	5-8	7-10	6-8 3/8
102"	0-1 1/2	2-2	2-8	0-9	5-7	17-9	7-2	10-6	8-8	19-8 3/4	8-1 3/4	6-10 7/8	0-2	11-7	14-9	6-10	20-2	6-0	8-2	7-0 3/8
108"	0-6	2-3	2-10	0-9	5-10	18-6	7-6	11-0	9-1	20-6 1/4	8-6 1/4	7-2 5/8	0-6	12-1	15-6	7-2	21-1	6-3	8-6	7-4 3/8
114"	0-3	2-3	3-0	0-10	6-1	19-3	7-11	11-6	9-6	21-3 7/8	8-11 7/8	7-7 5/8	0-4	12-9	16-0	7-6	21-10	6-8	8-11	7-9 3/8
120"	0-6	2-4	3-2	0-10	6-4	20-0	8-3	12-0	9-11	22-1 1/4	9-4 1/4	7-11 1/2	0-3	13-3	16-6	7-10	22-6	6-11	9-3	8-1 3/8
126"	0-4 1/2	2-6	3-2	0-11	6-7	21-0	8-7	12-6	10-3	23-2	9-9	8-3 1/2	0-3	13-10	17-3	8-2	23-6	7-3	9-9	8-10 1/8
132"	0-3	2-7	3-4	0-11	6-10	21-9	8-11	13-0	10-8	23-11 3/8	10-1 3/8	8-7 1/4	0-2	14-4	18-0	8-6	24-5	7-6	10-1	9-2 1/8
138"	0-6	2-7	3-6	1-0	7-1	22-9	9-4	13-6	11-1	25-0 1/8	10-7 1/8	9-0 1/4	0-2	15-0	18-6	8-10	25-2	7-11	10-6	9-7 1/8
144"	0-3	2-8	3-8	1-0	7-4	23-6	9-8	14-0	11-6	25-9 1/2	10-11 1/2	9-4	0-6	15-6	19-0	9-3	25-10	8-2	10-10	9-11 1/8

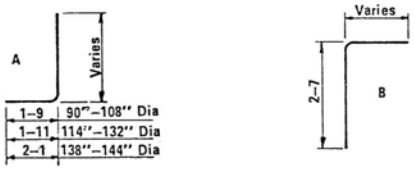

BENDS

QUANTITIES

Pipe Dia.	Reinf. (lbs)	Conc. (CY)
90"	1395	27.51
96"	1655	29.95
102"	1920	32.67
108"	2090	35.47
114"	2460	38.38
120"	2700	41.24
126"	3155	47.41
132"	3580	50.91
138"	3880	54.69
144"	4315	58.23

NOTE:

Quantities and steel list shown are for one headwall.

Registered Professional Engineer (Civil) CERTIFICATE EXPIRES DEC. 31, 19 ARIZONA, U.S.A.

DESIGN APPROVED	ARIZONA DEPARTMENT OF TRANSPORTATION HIGHWAYS DIVISION - STANDARD DRAWINGS -	REVISION
APPROVED FOR DISTRIBUTION	INLET AND OUTLET HEADWALLS 45° SKEW PIPE CULVERT 4:1 SLOPE	STANDARD NO. B-15.30

DESIGN	K W	9-72	DRAWN	LAM	9-72	CHECKED	RLC	9-72

STEEL LIST

Mark	Bend	90" Dia			96" Dia.			102" Dia.			108" Dia.			114" Dia			120" Dia.			126" Dia			132" Dia.			138" Dia			144" Dia.		
		No	Size	Lgth	No	Size	Lgth	No	Size	Lgth	No	Size	Lgth	No	Size	Lgth	No	Size	Lgth	No	Size	Lgth	No	Size	Lgth	No	Size	Lgth	No	Size	Lgth
a1	A	5	#5	11-3	5	#6	11-9	5	#6	12-3	5	#6	12-6	5	#7	13-0	5	#7	13-6	5	#7	13-9	5	#8	14-3	6	#8	15-0	6	#8	15-6
a2	A	5	#6	11-6	5	#6	12-0	4	#6	12-6	5	#7	12-9	5	#7	13-6	5	#7	14-0	5	#8	14-3	5	#8	14-9	5	#8	15-6	6	#8	16-0
a3	A	5	#6	11-9	5	#6	12-3	4	#7	12-9	4	#7	13-0	5	#7	13-9	5	#8	14-3	5	#8	14-9	5	#8	15-0	5	#8	15-9	5	#8	16-3
a4	A	4	#6	12-3	5	#7	12-9	4	#7	13-0	4	#7	13-6	4	#8	14-0	4	#8	14-6	5	#8	15-0	5	#8	15-6	5	#8	16-0	5	#8	16-6
a5	A							4	#7	13-3	3	#7	13-9	3	#8	14-3	4	#8	14-9	4	#8	15-3	5	#8	15-9	5	#8	16-6	5	#8	17-0
a6	A																														
a7	A																			3	#4	7-3	14	#4	7-6	19	#4	7-9	26	#4	8-6
a8	A	4	#4	10-0	5	#4	10-6	5	#5	10-9	5	#5	11-0	5	#5	11-9	4	#6	12-0	5	#6	12-6	5	#7	12-9	5	#7	13-3	5	#7	13-9
a9	A	4	#5	10-6	4	#5	11-0	5	#5	11-6	5	#6	11-9	5	#6	12-6	4	#6	12-6	4	#7	13-0	4	#7	13-6	5	#7	14-0	5	#7	14-6
a10	A	4	#5	11-3	4	#6	11-9	4	#6	12-3	4	#7	12-9	5	#7	13-3	4	#7	13-3	4	#7	13-9	4	#7	14-3	4	#8	14-9	5	#8	15-3
a11	A	4	#6	12-0	4	#7	12-6	3	#7	13-0	4	#7	13-3	4	#7	14-0	4	#7	14-0	4	#8	14-6	4	#8	15-0	4	#8	15-6	4	#8	16-0
a12	A																4	#8	14-6	3	#8	15-0	4	#8	15-6	4	#8	16-3	4	#8	16-9
a13	A																									3	#4	8-0	7	#4	8-9
b1	str	2	#4	18-3	2	#4	19-0	2	#4	20-0	2	#4	20-9	2	#4	21-9	2	#4	22-6	2	#4	23-6	2	#4	24-6	2	#4	25-3	2	#4	26-3
b2	str	12	#4	18-0	12	#4	18-9	12	#4	19-9	14	#4	20-6	14	#4	21-6	14	#4	22-3	16	#4	23-3	16	#4	24-3	16	#4	25-0	16	#4	26-0
b3	str				2	#4	8-0	2	#4	15-3				2	#4	8-0	2	#4	14-6				2	#4	8-9	2	#4	14-9	2	#4	21-6
b4	str																														
b5	str																														
b6	str	2	#4	15-3	2	#4	16-0	2	#4	16-9	2	#4	17-6	2	#4	18-3	2	#4	19-0	2	#4	19-9	2	#4	20-6	2	#4	21-3	2	#4	22-0
b7	str	10	#4	15-0	10	#4	15-9	10	#4	16-6	12	#4	17-3	12	#4	18-0	12	#4	18-9	14	#4	19-6	14	#4	20-3	14	#4	21-0	14	#4	21-9
b8	str	2	#4	10-0	2	#4	13-0	2	#4	15-9	2	#4	9-9	2	#4	12-9	2	#4	16-0	2	#4	10-0	2	#4	12-9	2	#4	15-9	2	#4	19-0
b9	str				2	#4	3-9	2	#4	6-9				2	#4	4-0	2	#4	7-0				2	#4	3-6	2	#4	6-9	2	#4	9-9
b10	str																														
b11	str																														
c	str	5	#4	10-6	5	#4	11-0	5	#4	11-6	5	#4	12-0	5	#4	12-6	5	#4	13-0	5	#4	13-6	5	#4	14-0	5	#4	14-6	5	#4	15-0
d	A	6	#6	12-6	6	#6	13-0	6	#6	13-6	6	#7	14-0	6	#7	14-6	6	#7	15-0	6	#7	15-6	6	#7	16-0	6	#7	16-9	6	#7	17-3
e1	str	5	#4	3-3	5	#4	3-6	5	#4	3-9	6	#5	4-0	5	#5	4-3	5	#5	4-6	5	#6	4-6	5	#6	4-9	6	#6	5-0	6	#7	5-3
e2	str	5	#4	3-6	5	#4	3-9	4	#4	4-0	6	#5	4-3	5	#5	4-6	5	#5	4-9	5	#6	4-9	5	#6	5-0	5	#6	5-3	6	#7	5-6
e3	str	5	#4	3-9	5	#4	4-0	4	#5	4-0	5	#5	4-6	5	#5	4-9	5	#6	4-9	5	#6	5-0	5	#6	5-3	5	#7	5-6	5	#7	5-9
e4	str	4	#4	4-0	5	#5	4-3	4	#5	4-3	5	#5	4-9	4	#6	4-9	4	#6	5-0	5	#6	5-3	5	#7	5-6	5	#7	5-9	5	#7	6-0
e5	str							4	#5	4-6				4	#6	5-0	4	#6	5-3	4	#7	5-6	5	#7	5-9	5	#7	6-0	5	#8	6-3
e6	str																														
e7	str	2	#4	4-0	2	#5	4-3	2	#5	4-6	2	#5	4-9	2	#6	5-0	2	#6	5-3	2	#7	5-6	2	#7	5-9	2	#7	6-0	2	#8	6-3
e8	str	14	#4	4-0	14	#5	4-3	15	#5	4-6	15	#5	4-9	16	#6	5-0	16	#6	5-3	17	#7	5-6	17	#7	5-9	18	#7	6-0	19	#8	6-3
e9	str	3	#4	4-0	3	#5	4-3	3	#5	4-6	3	#5	4-9	4	#6	5-0	4	#6	5-3	4	#7	5-6	4	#7	5-9	4	#7	6-0	4	#8	6-3
e10	str	4	#4	4-0	4	#5	4-3	4	#5	4-6	4	#5	4-9	4	#6	5-0	4	#6	5-3	4	#6	5-6	4	#7	5-9	4	#7	6-0	4	#8	6-3
e11	str	4	#4	3-9	4	#5	4-0	4	#5	4-3	4	#5	4-6	5	#5	4-9	4	#6	5-0	4	#6	5-3	4	#6	5-6	4	#7	5-9	4	#7	6-0
e12	str	4	#4	3-6	4	#4	3-9	5	#4	4-0	5	#4	4-3	5	#5	4-6	4	#5	5-0	4	#6	5-0	4	#6	5-3	4	#6	5-6	5	#7	5-9
e13	str	4	#4	3-3	5	#4	3-6	5	#4	3-9	5	#4	4-0	5	#4	4-3	4	#5	4-9	4	#5	4-9	4	#5	5-0	5	#6	5-3	5	#6	5-6
e14	str																4	#5	4-6	5	#5	4-6	5	#5	4-9	5	#6	5-0	5	#6	5-3
f1	str	5	#4	9-6	5	#4	9-9	5	#4	10-3	5	#4	10-6	5	#4	11-0	4	#4	11-6	4	#4	12-0	5	#4	12-6	5	#4	12-9	5	#4	13-3
f2	str	4	#4	9-9	4	#4	10-3	5	#4	10-9	5	#4	11-3	5	#4	11-9	4	#4	12-0	4	#4	12-6	4	#4	13-0	5	#4	13-3	5	#4	13-9
f3	str	4	#4	10-3	4	#4	10-9	4	#4	11-3	5	#4	11-9	5	#4	12-3	4	#4	12-3	4	#4	12-9	4	#4	13-3	4	#4	13-9	4	#4	14-3
f4	str																4	#4	12-9	4	#4	13-3	4	#4	13-9	4	#4	14-3	4	#4	14-9
f5	str	4	#4	8-3	4	#4	8-6	4	#4	9-0	4	#4	9-3	4	#4	9-9	4	#4	10-3	4	#4	10-6	4	#4	10-9	4	#4	11-3	4	#4	11-9
f6	str	4	#4	9-3	4	#4	9-6	4	#4	9-9	4	#4	10-3	3	#4	10-6	3	#4	11-0	4	#4	11-6	4	#4	11-9	4	#4	12-3	4	#4	12-6
f7	str	3	#4	10-3	3	#4	10-6	4	#4	10-9	4	#4	11-3	3	#4	11-3	3	#4	12-0	3	#4	12-6	3	#4	12-9	4	#4	13-3	4	#4	13-6
f8	str													3	#4	12-3	3	#4	12-6	3	#4	13-3	3	#4	13-6	3	#4	14-3	3	#4	14-6
m1	str	3	#4	19-9	3	#4	20-6	3	#4	21-6	3	#4	22-3	3	#4	23-3	3	#4	24-3	3	#4	25-3	4	#4	26-3	4	#4	27-0	4	#4	28-0
m2	str	1	#4	19-9	1	#4	20-6	1	#4	21-6	1	#4	22-3	1	#4	23-3	1	#4	24-3	1	#4	25-3	1	#4	26-3	1	#4	27-0	1	#4	28-0
m3	str	3	#4	19-6	3	#4	20-6	3	#4	21-6	3	#4	22-6	3	#4	23-3	3	#4	24-3	3	#4	25-3	4	#4	26-3	4	#4	27-3	4	#4	28-0
m4	str	1	#4	19-6	1	#4	20-6	1	#4	21-6	1	#4	22-6	1	#4	23-3	1	#4	24-3	1	#4	25-3	1	#4	26-3	1	#4	27-3	1	#4	28-0
n1	str	3	#4	17-0	3	#4	17-9	3	#4	18-9	3	#4	19-6	3	#4	20-6	3	#4	21-6	3	#4	22-3	4	#4	23-3	4	#4	24-3	4	#4	25-0
n2	str	1	#4	17-0	1	#4	17-9	1	#4	18-9	1	#4	19-6	1	#4	20-6	1	#4	21-6	1	#4	22-3	1	#4	23-3	1	#4	24-3	1	#4	25-0
p	str	4	#5	13-0	4	#5	13-9	4	#5	14-3	4	#5	15-0	4	#5	15-9	4	#5	16-6	4	#5	17-3	4	#5	17-9	4	#5	18-9	4	#5	19-3
q	str	2	#6	15-0	2	#6	15-9	2	#6	16-3	2	#6	17-0	2	#6	17-9	2	#6	18-6	2	#6	19-3	2	#6	19-9	2	#6	20-9	2	#6	21-3
g	str	2	#4	12-0	2	#4	12-9	2	#4	13-6	2	#4	14-3	2	#4	14-9	2	#4	15-6	2	#4	16-0	2	#4	16-9	2	#4	17-3	2	#4	18-0
u	B	9	#4	4-6	9	#4	4-6	10	#4	4-6	10	#4	4-9	10	#4	4-9	11	#4	4-9	11	#4	4-9	12	#4	5-0	12	#4	5-0	13	#4	5-0
v	str	1	#4	19-0	1	#4	19-9	1	#4	20-6	1	#4	21-6	1	#4	22-3	1	#4	23-3	1	#4	24-0	1	#4	25-0	1	#4	25-9	1	#4	26-9
w	str	1	#4	15-0	1	#4	15-9	1	#4	16-6	1	#4	17-3	1	#4	17-9	1	#4	18-6	1	#4	19-3	1	#4	20-0	1	#4	20-9	1	#4	21-3

Pipe Dia.	DIMENSIONS																			
	A	B	C	D	E	F	G	H	J	K	L	M	N	P	R	S	T	V	W	X
90"	0-3	2-2	2-6	0-5	5-1	18-0	6-6	9-6	8-3	19-10 1/2	7-4 1/2	6-2 7/8	0-3	10-5	15-0	7-0	19-11	5-4	7-6	6-4 3/8
96"	0-1 1/2	2-2	2-9	0-5	5-4	18-9	6-10	10-0	8-8	20-8 1/8	7-9 1/8	6-6 7/8	0-2	11-0	15-9	7-5	20-11	5-8	7-10	6-8 3/8
102"	0-6	2-2	2-11	0-6	5-7	19-9	7-2	10-6	9-2	21-8 3/4	8-1 3/4	6-10 7/8	0-2	11-7	16-6	7-9	21-11	6-0	8-2	7-0 3/8
108"	0-4 1/2	2-3	3-0	0-7	5-10	20-6	7-6	11-0	9-6	22-6 1/4	8-6 1/4	7-2 5/8	0-6	12-1	17-3	8-1	22-10	6-3	8-6	7-4 3/8
114"	0-3	2-4	3-2	0-7	6-1	21-6	7-11	11-6	10-0	23-6 5/8	8-11 5/8	7-7 1/2	0-6	12-8	18-0	8-6	23-9	6-7	8-11	7-9 3/8
120"	0-1 1/2	2-4	3-5	0-7	6-4	22-3	8-3	12-0	10-5	24-4 1/4	9-4 1/4	7-11 1/2	0-4	13-3	18-9	8-11	24-9	6-11	9-3	8-1 3/8
126"	0-6	2-7	3-4	0-8	6-7	23-3	8-7	12-6	10-10	25-4 3/4	9-8 3/4	8-3 1/4	0-4	13-9	19-6	9-3	25-8	7-2	9-9	8-10 1/8
132"	0-4 1/2	2-7	3-7	0-8	6-10	24-3	8-11	13-0	11-4	26-5 3/8	10-1 3/8	8-7 1/4	0-4	14-4	20-3	9-7	26-8	7-6	10-1	9-2 1/8
138"	0-3	2-8	3-9	0-8	7-1	25-0	9-4	13-6	11-9	27-2 7/8	10-6 7/8	9-0	0-3	14-11	21-0	10-0	27-7	7-10	10-6	9-7 1/8
144"	0-1 1/2	2-8	4-0	0-8	7-4	26-0	9-8	14-0	12-2	28-3 1/4	10-11 1/4	9-3 3/4	0-3	15-5	21-9	10-5	28-6	8-1	10-10	9-11 1/8

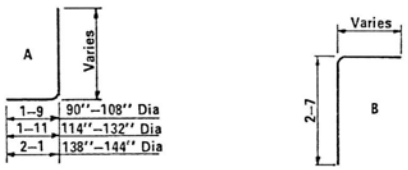

BENDS

QUANTITIES

Pipe Dia.	Reinf. (lbs)	Conc. (CY)
90"	1560	29.98
96"	1840	32.78
102"	2050	35.80
108"	2325	38.64
114"	2720	42.08
120"	3075	45.38
126"	3490	52.07
132"	3960	56.09
138"	4370	60.09
144"	4910	64.31

Registered Professional Engineer (Civil) CERTIFICATE EXPIRES DEC. 31, 19 ARIZONA, U.S.A.

NOTE:

Quantities and steel list shown are for one headwall.

DESIGN APPROVED	ARIZONA DEPARTMENT OF TRANSPORTATION HIGHWAYS DIVISION STANDARD DRAWINGS	REVISION
APPROVED FOR DISTRIBUTION	INLET AND OUTLET HEADWALLS 45° SKEW PIPE CULVERT 6:1 SLOPE	STANDARD NO. B-15.40

DESIGN	K W	9-72	DRAWN	LAM	9-72	CHECKED	RLC	9-72

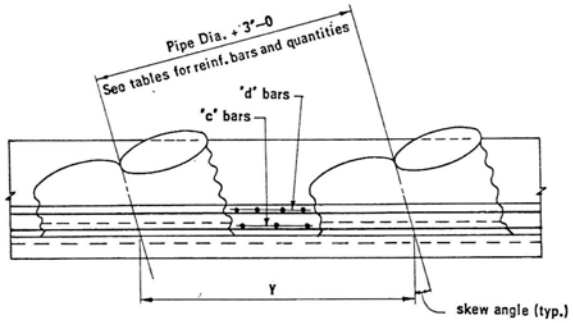

PLAN – INLET OR OUTLET END WITHOUT APRON

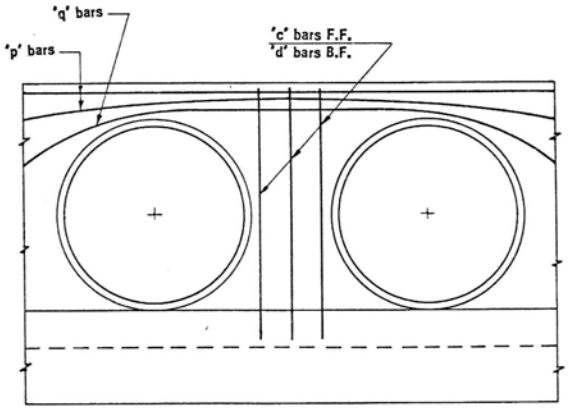

ELEVATION WITHOUT APRON

Note: Outlet end with apron similar.

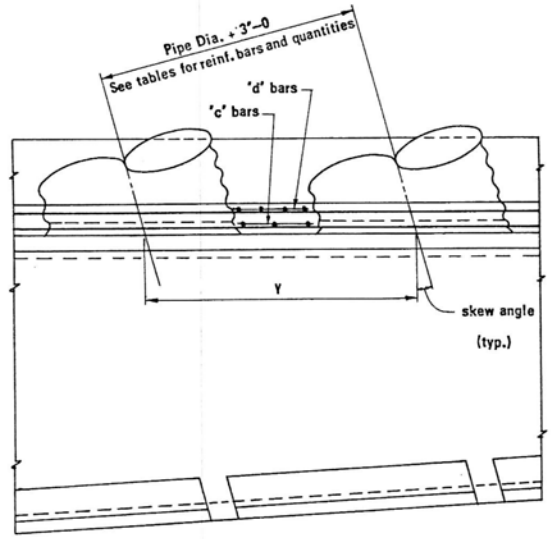

PLAN – OUTLET END WITH APRON

DIMENSION Y (FT)

SKEW	PIPE DIA (INCHES)									
	90"	96"	102"	108"	114"	120"	126"	132"	138"	144"
Rt ∢	10-6	11-0	11-6	12-0	12-6	13-0	13-6	14-0	14-6	15-0
15°	10-10 1/2	11-4 5/8	11-10 7/8	12-5 1/8	12-11 3/8	13-5 1/2	13-11 3/4	14-6	15-0 1/4	15-6 3/8
30°	12-1 1/2	12-8 3/8	13-3 1/4	13-10 1/4	14-5 1/8	15-0 1/8	15-7	16-1 7/8	16-8 7/8	17-3 7/8
45°	14-10 1/4	15-6 5/8	16-3 1/8	16-11 5/8	17-8	18-4 1/2	19-1 1/8	19-9 5/8	20-6	21-2 1/2

NO. OF ADDITIONAL BARS REQD. PER ADDITIONAL PIPE**

SKEW	MARK	PIPE DIA. (inches)									
		90"	96"	102"	108"	114"	120"	126"	132"	138"	144"
Rt ∢	c	3	3	3	3	3	3	3	3	3	3
	d	4	4	4	4	4	4	5	5	5	5
	e8, r1, s	10	10	11	11	12	12	13	13	14	14
	h, u	6	7	7	7	8	8	8	9	9	10
15°	c	3	3	3	3	3	3	3	3	3	3
	d	4	4	4	4	5	5	6	6	6	6
	e8, r1, s	10	11	11	12	12	13	13	14	14	15
	h, u	7	7	7	8	8	8	9	9	10	10
30°	c	3	3	3	3	3	3	3	3	3	3
	d	4	4	4	4	5	5	7	7	7	7
	e8, r1, s	11	12	13	13	14	14	15	15	16	17
	h, u	8	8	8	9	9	10	10	10	11	11
45°	c	4	4	4	4	4	4	4	4	4	4
	d	5	5	5	5	6	6	9	9	9	9
	e8, r1, s	14	15	16	16	17	18	18	19	20	20
	h, u	10	10	10	11	11	12	12	13	13	14

**For inlet and outlet without apron omit bars "r1," "s" and "h."
For outlet with apron omit "u" bar.

CONC. QUANTITIES PER ADDITIONAL PIPE (C.Y.) OUTLET END WITH APRON

Pipe Dia.	Rt ∢			15°			30°			45°		
	2:1	4:1	6:1	2:1	4:1	6:1	2:1	4:1	6:1	2:1	4:1	6:1
90"	8.69	8.96	9.20	8.75	9.32	9.69	9.66	10.31	10.71	11.63	12.47	12.81
96"	9.41	9.71	9.99	9.50	10.11	10.53	10.49	11.19	11.63	12.62	13.50	13.90
102"	10.21	10.55	10.83	10.26	10.93	11.40	11.32	12.08	12.57	13.64	14.58	15.04
108"	11.03	11.36	11.67	11.05	11.78	12.30	12.21	13.00	13.55	14.71	15.69	16.23
114"	11.90	12.25	12.56	11.89	12.67	13.24	13.05	13.90	14.52	15.80	16.83	17.43
120"	12.79	13.15	13.46	12.73	13.57	14.20	14.07	14.98	15.64	16.95	18.04	18.71
126"	13.67	14.08	14.44	13.61	14.51	15.20	15.04	16.00	16.72	18.12	19.26	20.01
132"	14.55	15.00	15.44	14.53	15.49	16.24	16.04	17.06	17.84	19.36	20.54	21.38
138"	15.47	16.00	16.41	15.47	16.49	17.31	17.09	18.17	19.01	20.60	21.83	22.76
144"	16.42	16.99	17.46	16.42	17.51	18.40	18.17	19.30	20.21	21.89	23.18	24.19

BAR LENGTH ADJUSTMENT PER ADDITIONAL PIPE (FT.)

SKEW	MARK*	PIPE DIA (inches)									
		90"	96"	102"	108"	114"	120"	126"	132"	138"	144"
Rt ∢	j, n, p q, v and t1 to t7	10-6	11-0	11-6	12-0	12-6	13-0	13-6	14-0	14-6	15-0
15°	g,j,n1,n2,p,q and t1 to t11	10-9	11-3	12-0	12-6	13-0	13-6	14-0	14-6	15-0	15-6
30°	g,j,n1,n2,p,q and t1 to t10	12-0	12-9	13-3	13-9	14-6	15-0	15-6	16-3	16-9	17-3
45°	g,j,n1,n2,p,q and t1 to t10	14-9	15-6	16-3	17-0	17-9	18-3	19-0	19-9	20-6	21-3

*Increase bar lengths for single pipes by dimensions in table for each additional pipe.

INLET OR OUTLET QUANTITIES PER ADDITIONAL PIPE WITHOUT APRON

Pipe Dia.	Conc. (CY)				Reinforcing (lbs)														
	Rt ∢	15°	30°	45°	Rt ∢ Inlet			Rt ∢ Outlet			15°			30°			45°		
					2:1	4:1	6:1	2:1	4:1	6:1	2:1	4:1	6:1	2:1	4:1	6:1	2:1	4:1	6:1
90"	6.02	6.23	6.95	8.51	280	270	265	260	265	265	280	265	265	280	280	280	350	350	350
96"	6.52	6.76	7.54	9.22	320	335	325	320	330	300	320	300	300	320	320	320	400	395	395
102"	7.05	7.30	8.13	9.96	335	345	345	335	340	340	365	340	340	370	365	370	460	455	420
108"	7.58	7.89	8.75	10.73	420	395	355	370	390	355	430	365	365	385	380	385	480	475	480
114"	8.15	8.44	9.34	11.51	450	455	440	445	445	445	485	435	445	485	465	485	590	570	575
120"	8.72	9.03	10.07	12.34	465	470	460	500	460	460	515	460	470	500	485	500	620	600	605
126"	9.32	9.65	10.75	13.18	580	580	565	575	575	565	620	550	525	640	620	640	795	770	775
132"	9.93	10.30	11.46	14.05	595	605	585	595	595	590	660	590	600	665	655	665	840	825	830
138"	10.57	10.95	12.20	14.94	685	635	620	675	630	620	680	610	620	705	690	705	885	870	880
144"	11.22	11.62	12.95	15.86	720	715	700	700	710	700	715	705	715	810	795	810	1000	980	990

REINF. BAR QUANTITIES PER ADDITIONAL PIPE (lbs) OUTLET END WITH APRON

Pipe Dia.	Rt ∢			15°			30°			45°		
	2:1	4:1	6:1	2:1	4:1	6:1	2:1	4:1	6:1	2:1	4:1	6:1
90"	430	445	460	440	465	495	450	495	525	550	620	640
96"	500	510	505	495	515	545	505	565	590	615	690	705
102"	540	560	575	550	580	615	570	630	665	685	770	765
108"	595	630	615	640	630	665	605	665	705	730	820	855
114"	680	705	730	705	710	760	720	770	835	840	945	975
120"	755	735	775	760	765	820	760	805	855	920	990	1040
126"	855	875	910	870	875	895	915	965	1040	1095	1170	1225
132"	905	920	955	935	940	1000	955	1020	1085	1185	1280	1335
138"	1005	990	1020	965	970	1040	1015	1080	1155	1145	1355	1410
144"	1040	1085	1120	1030	1030	1170	1140	1210	1275	1380	1480	1550

Professional Engineer (Civil) CERTIFICATE EXPIRES DEC. 31, 19 ARIZONA, U.S.A.

NOTES: Multipipe culvert headwall quantities are obtained by multiplying quantity shown in tables by the number of additional pipes and adding to single pipe headwall quantity.
Number of bars and quantities shown in tables are for one headwall.

DESIGN	K.W.	9-72	DRAWN	L.A.M.	9-72	CHECKED	R.L.C.	9-72

DESIGN APPROVED

APPROVED FOR DISTRIBUTION

ARIZONA
DEPARTMENT OF TRANSPORTATION
HIGHWAYS DIVISION
STANDARD DRAWINGS

MULTIPLE HEADWALLS

REVISION

STANDARD

B-16.10

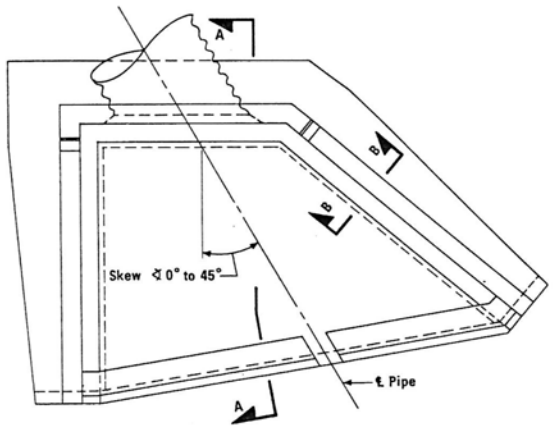

TYPICAL PLAN – HEADWALL WITH APRON

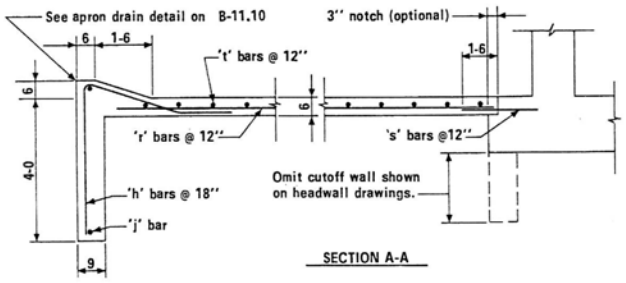

SECTION A-A

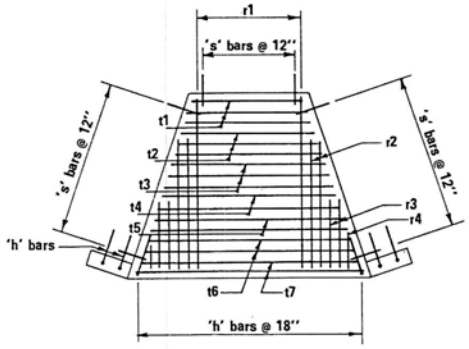

RIGHT ANGLE

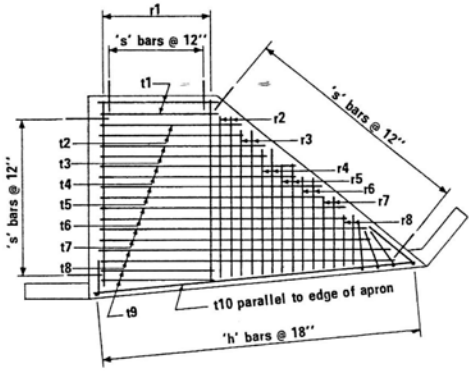

30° SKEW

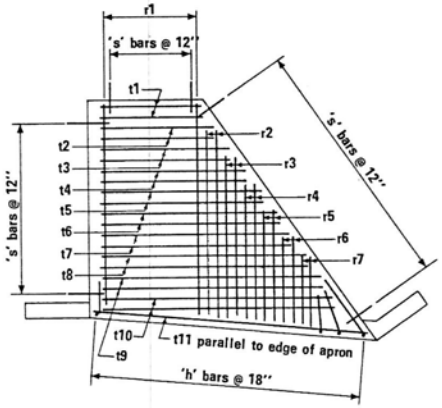

15° SKEW

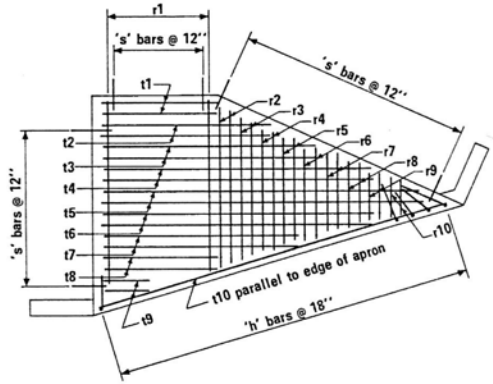

45° SKEW

REINFORCING STEEL LAYOUT

OUTLET APRON QUANTITIES*

SKEW	RT ∢						15°						30°						45°					
SLOPE	2:1		4:1		6:1		2:1		4:1		6:1		2:1		4:1		6:1		2:1		4:1		6:1	
PIPE DIA.	REINF. (lbs)	CONC. (CY)	REINF. (lbs)	CONC. (CY)	REINF. (lbs)	CONC. (CY)	REINF. (lbs)	CONC. (CY)	REINF. (lbs)	CONC. (CY)	REINF. (lbs)	CONC. (CY)	REINF. (lbs)	CONC. (CY)	REINF. (lbs)	CONC. (CY)	REINF. (lbs)	CONC. (CY)	REINF. (lbs)	CONC. (CY)	REINF. (lbs)	CONC. (CY)	REINF. (lbs)	CONC. (CY)
90"	190	3.70	235	4.38	265	4.88	205	3.38	250	4.21	325	4.91	245	4.17	305	5.28	400	6.36	275	5.42	380	6.54	430	7.31
96"	215	3.96	255	4.66	285	5.27	215	3.64	280	4.52	350	5.33	255	4.52	335	5.70	440	6.82	285	5.81	395	7.00	475	7.91
102"	240	4.35	270	5.07	315	5.71	235	3.95	305	4.93	385	5.83	280	4.92	365	6.22	465	7.34	305	6.28	430	7.57	515	8.58
108"	265	4.73	300	5.48	345	6.14	250	4.23	330	5.36	420	6.29	315	5.32	400	6.72	495	7.93	335	6.68	475	8.12	555	9.15
114"	290	5.15	340	5.95	370	6.61	270	4.58	355	5.71	440	6.78	330	5.75	425	7.15	545	8.50	360	7.21	500	8.70	595	9.88
120"	310	5.56	350	6.38	410	7.09	295	4.88	385	6.08	495	7.33	365	6.18	455	7.52	580	8.99	400	7.67	535	9.22	650	10.57
126"	330	5.85	385	6.79	425	7.50	315	5.23	415	6.56	530	7.88	390	6.63	485	8.18	620	9.60	425	8.18	565	9.94	690	11.28
132"	360	6.23	400	7.19	450	8.03	340	5.56	440	6.99	570	8.43	425	7.09	520	8.69	665	10.17	465	8.69	615	10.56	735	12.08
138"	380	6.59	430	7.68	500	8.56	355	5.96	470	7.44	605	9.03	455	7.56	555	9.20	680	10.8	485	9.29	660	11.30	775	12.83
144"	405	6.92	460	8.04	530	9.08	395	6.36	495	7.93	655	9.70	470	7.99	570	9.59	720	11.54	530	9.81	695	11.88	825	13.62

*The apron quantities take into consideration the cutoff walls being omitted along outlet headwall.

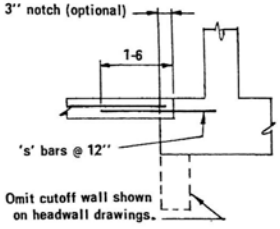

SECTION B-B

NOTES:

For General Notes and Misc. Details see B-11.10

For steel list and bend diagrams see B-17.20, B-17.30 or B-17.40

Registered Professional Engineer
CERTIFICATE EXPIRES
PACKED CANNOT
DEC 31, 19
ARIZONA, U.S.A.

DESIGN APPROVED	ARIZONA DEPARTMENT OF TRANSPORTATION HIGHWAYS DIVISION STANDARD DRAWINGS	REVISION
APPROVED FOR DISTRIBUTION	OUTLET APRONS	STANDARD NO. B-17.10

DESIGN	K W	9-72	DRAWN	LAM	9-72	CHECKED	RLC	9-72

RIGHT ANGLE

Mark	Bend	90" Dia			96" Dia			102" Dia			108" Dia			114" Dia			120" Dia			126" Dia			132" Dia			138" Dia			144" Dia		
		No	Size	Lgth	No	Size	Lgth	No	Size	Lgth	No	Size	Lgth	No	Size	Lgth	No	Size	Lgth	No	Size	Lgth	No	Size	Lgth	No	Size	Lgth	No	Size	Lgth
h	C	12	#4	7-3	15	#4	7-3	15	#4	7-3	16	#4	7-3	17	#4	7-3	17	#4	7-3	18	#4	7-3	19	#4	7-3	20	#4	7-3	20	#4	7-3
j	str	1	#4	21-9	1	#4	22-6	1	#4	24-0	1	#4	25-3	1	#4	26-3	1	#4	27-6	1	#4	28-6	1	#4	29-9	1	#4	30-6	1	#4	31-6
r1	str	9	#4	10-6	9	#4	11-0	10	#4	11-6	10	#4	12-3	11	#4	12-9	11	#4	13-6	12	#4	14-0	12	#4	14-6	13	#4	15-0	13	#4	15-3
r2	str	4	#4	5-6	4	#4	6-6	4	#4	7-0	4	#4	7-9	4	#4	8-0	4	#4	8-9	4	#4	8-9	4	#4	9-6	4	#4	9-6	4	#4	10-0
r3	str	2	#4	2-9	2	#4	3-6	2	#4	3-6	2	#4	5-0	2	#4	5-0	4	#4	3-6	4	#4	3-0	4	#4	4-0	4	#4	3-6	4	#4	4-6
r4	str																														
s	str	31	#4	2-0	32	#4	2-0	33	#4	2-0	33	#4	2-6	36	#4	2-6	38	#4	2-6	40	#4	2-6	40	#4	3-0	41	#4	3-0	43	#4	3-0
t1	str	3	#4	8-3	3	#4	9-0	3	#4	9-6	3	#4	9-9	3	#4	10-3	3	#4	10-6	3	#4	11-0	3	#4	11-6	3	#4	12-3	3	#4	12-6
t2	str	3	#4	10-6	3	#4	11-0	3	#4	11-6	3	#4	11-9	3	#4	12-3	3	#4	12-6	3	#4	13-6	3	#4	13-9	3	#4	14-0	3	#4	14-6
t3	str	3	#4	13-0	3	#4	13-3	3	#4	14-0	3	#4	14-3	3	#4	14-6	3	#4	14-9	3	#4	15-9	3	#4	16-0	3	#4	16-3	3	#4	16-9
t4	str	2	#4	15-0	2	#4	15-6	3	#4	16-0	2	#4	16-6	2	#4	17-0	3	#4	17-3	3	#4	18-0	3	#4	18-0	3	#4	18-6	3	#4	19-0
t5	str										2	#4	18-0	2	#4	18-6	2	#4	19-6	2	#4	20-0	3	#4	20-0	3	#4	21-0	2	#4	21-0
t6	str																												2	#4	22-6
t7	str																														

30° SKEW

Mark	Bend	90" Dia			96" Dia			102" Dia			108" Dia			114" Dia			120" Dia			126" Dia			132" Dia			138" Dia			144" Dia		
		No	Size	Lgth	No	Size	Lgth	No	Size	Lgth	No	Size	Lgth	No	Size	Lgth	No	Size	Lgth	No	Size	Lgth	No	Size	Lgth	No	Size	Lgth	No	Size	Lgth
h	C	14	#4	7-3	15	#4	7-3	16	#4	7-3	17	#4	7-3	17	#4	7-3	18	#4	7-3	19	#4	7-3	20	#4	7-3	21	#4	7-3	22	#4	7-3
j	str	1	#4	25-6	1	#4	27-0	1	#4	28-6	1	#4	30-0	1	#4	31-0	1	#4	33-0	1	#4	34-6	1	#4	36-0	1	#4	37-6	1	#4	39-0
r1	str	10	#4	8-0	10	#4	7-9	10	#4	8-3	11	#4	8-9	12	#4	9-3	12	#4	9-9	13	#4	10-3	13	#4	10-6	14	#4	11-0	14	#4	11-6
r2	str	2	#4	6-9	2	#4	6-9	2	#4	7-9	2	#4	7-6	2	#4	8-0	2	#4	8-9	2	#4	9-3	2	#4	9-9	2	#4	10-0	2	#4	10-6
r3	str	2	#4	5-3	2	#4	5-0	2	#4	6-3	2	#4	6-0	2	#4	6-6	2	#4	7-0	2	#4	7-6	2	#4	8-0	2	#4	8-6	2	#4	9-0
r4	str	2	#4	3-9	2	#4	3-6	2	#4	4-6	2	#4	4-3	2	#4	4-6	2	#4	5-6	2	#4	5-9	2	#4	6-6	2	#4	7-0	2	#4	7-6
r5	str							2	#4	3-6	1	#4	3-6	1	#4	3-9	2	#4	3-9	2	#4	4-6	2	#4	5-0	2	#4	5-6	2	#4	6-0
r6	str																						2	#4	4-0	3	#4	3-0	3	#4	4-3
r7	str																														
r8	str																														
s	str	30	#4	3-0	30	#4	3-0	32	#4	3-0	34	#4	3-0	35	#4	3-0	37	#4	3-0	38	#4	3-0	41	#4	3-0	42	#4	3-0	44	#4	3-0
t1	str	2	#4	9-6	2	#4	10-3	2	#4	11-0	2	#4	11-6	2	#4	12-0	2	#4	12-0	2	#4	13-0	2	#4	13-6	2	#4	14-0	2	#4	14-9
t2	str	2	#4	12-0	2	#4	12-6	2	#4	13-3	2	#4	13-9	2	#4	14-0	2	#4	14-6	2	#4	15-6	2	#4	15-9	2	#4	16-3	2	#4	17-3
t3	str	2	#4	14-6	2	#4	15-0	2	#4	15-9	2	#4	16-3	2	#4	16-6	2	#4	17-0	2	#4	17-9	2	#4	18-0	2	#4	18-9	2	#4	19-6
t4	str	2	#4	17-0	2	#4	17-3	2	#4	18-0	2	#4	18-6	2	#4	18-9	2	#4	19-3	2	#4	20-0	2	#4	20-6	2	#4	21-0	2	#4	21-9
t5	str				1	#4	19-6	1	#4	20-0	2	#4	20-9	2	#4	21-0	2	#4	21-6	2	#4	22-6	2	#4	23-0	2	#4	23-3	2	#4	24-3
t6	str																1	#4	24-0	1	#4	25-0	2	#4	25-0	2	#4	25-9	2	#4	26-6
t7	str																														
t8	str																														
t9	str																														
t10	str	1	#4	19-3	1	#4	20-3	1	#4	21-6	1	#4	22-9	1	#4	24-0	1	#4	25-0	1	#4	26-3	1	#4	27-6	1	#4	28-6	1	#4	29-6

15° SKEW

Mark	Bend	90" Dia			96" Dia			102" Dia			108" Dia			114" Dia			120" Dia			126" Dia			132" Dia			138" Dia			144" Dia		
		No	Size	Lgth	No	Size	Lgth	No	Size	Lgth	No	Size	Lgth	No	Size	Lgth	No	Size	Lgth	No	Size	Lgth	No	Size	Lgth	No	Size	Lgth	No	Size	Lgth
h	C	12	#4	7-3	12	#4	7-3	13	#4	7-3	13	#4	7-3	14	#4	7-3	14	#4	7-3	15	#4	7-3	16	#4	7-3	16	#4	7-3	17	#4	7-3
j	str	1	#4	21-0	1	#4	22-0	1	#4	23-3	1	#4	24-3	1	#4	25-6	1	#4	26-6	1	#4	27-6	1	#4	28-6	1	#4	29-9	1	#4	31-0
r1	str	9	#4	8-3	9	#4	8-6	10	#4	9-3	10	#4	9-9	11	#4	10-3	11	#4	10-9	12	#4	11-3	12	#4	11-6	12	#4	12-0	12	#4	12-6
r2	str	2	#4	6-0	2	#4	7-0	2	#4	7-0	2	#4	7-9	2	#4	7-9	2	#4	8-9	2	#4	8-6	2	#4	9-0	2	#4	10-3	2	#4	11-3
r3	str	1	#4	4-6	2	#4	4-6	2	#4	4-3	2	#4	5-3	2	#4	5-0	2	#4	6-0	2	#4	6-0	2	#4	6-6	2	#4	7-6	2	#4	8-9
r4	str																1	#4	4-9	1	#4	5-0	1	#4	5-0	2	#4	5-0	2	#4	6-0
r5	str																														
r6	str																														
r7	str																														
s	str	26	#4	3-0	26	#4	3-0	28	#4	3-0	29	#4	3-0	31	#4	3-0	33	#4	3-0	33	#4	3-0	34	#4	3-0	36	#4	3-0	38	#4	3-0
t1	str	2	#4	8-6	2	#4	9-0	2	#4	9-3	2	#4	9-9	2	#4	10-3	2	#4	10-6	2	#4	11-0	2	#4	11-6	2	#4	12-0	2	#4	12-6
t2	str	2	#4	10-3	2	#4	10-6	2	#4	11-0	2	#4	11-3	2	#4	11-9	2	#4	12-0	2	#4	12-6	2	#4	12-9	2	#4	13-3	2	#4	13-9
t3	str	2	#4	11-3	2	#4	12-0	2	#4	12-3	2	#4	12-9	2	#4	13-0	2	#4	13-6	2	#4	14-0	2	#4	14-6	2	#4	15-0	2	#4	15-3
t4	str	2	#4	12-6	2	#4	13-0	2	#4	13-6	2	#4	14-0	2	#4	14-6	2	#4	14-9	2	#4	15-3	2	#4	15-9	2	#4	16-3	2	#4	17-0
t5	str	1	#4	14-0	1	#4	14-6	1	#4	15-0	2	#4	15-6	2	#4	16-0	2	#4	16-0	2	#4	16-9	2	#4	17-0	2	#4	17-6	2	#4	18-3
t6	str																1	#4	17-6	1	#4	18-0	2	#4	18-6	2	#4	19-0	2	#4	19-6
t7	str																												1	#4	21-0
t8	str																														
t9	str																														
t10	str																														
t11	str	1	#4	15-0	1	#4	15-6	1	#4	16-6	1	#4	17-6	1	#4	18-3	1	#4	19-0	1	#4	20-0	1	#4	20-6	1	#4	21-6	1	#4	22-6

45° SKEW

Mark	Bend	90" Dia			96" Dia			102" Dia			108" Dia			114" Dia			120" Dia			126" Dia			132" Dia			138" Dia			144" Dia		
		No	Size	Lgth	No	Size	Lgth	No	Size	Lgth	No	Size	Lgth	No	Size	Lgth	No	Size	Lgth	No	Size	Lgth	No	Size	Lgth	No	Size	Lgth	No	Size	Lgth
h	c	18	#4	7-3	19	#4	7-3	20	#4	7-3	21	#4	7-3	22	#4	7-3	23	#4	7-3	24	#4	7-3	25	#4	7-3	26	#4	7-3	27	#4	7-3
j	str	1	#4	33-3	1	#4	34-9	1	#4	36-6	1	#4	38-0	1	#4	39-9	1	#4	41-6	1	#4	43-3	1	#4	44-9	1	#4	46-6	1	#4	48-3
r1	str	12	#4	6-9	13	#4	7-0	13	#4	7-6	14	#4	7-9	15	#4	8-0	15	#4	8-9	16	#4	9-3	17	#4	9-9	17	#4	10-3	18	#4	11-0
r2	str	3	#4	5-0	3	#4	5-3	3	#4	5-9	3	#4	6-0	3	#4	6-3	3	#4	7-3	3	#4	7-6	3	#4	8-0	3	#4	8-6	3	#4	8-6
r3	str	3	#4	4-0	3	#4	3-9	2	#4	4-0	2	#4	4-3	3	#4	4-9	3	#4	5-6	3	#4	6-0	3	#4	6-0	3	#4	6-6	3	#4	6-9
r4	str							2	#4	3-0	2	#4	3-3	2	#4	3-6	3	#4	4-0	3	#4	4-3	3	#4	5-0	3	#4	5-3	3	#4	5-3
r5	str																									2	#4	4-0	3	#4	4-0
r6	str																														
r7	str																														
r8	str																														
r9	str																														
r10	str																														
s	str	32	#4	3-0	33	#4	3-0	34	#4	3-0	37	#4	3-0	39	#4	3-0	41	#4	3-0	43	#4	3-0	46	#4	3-0	46	#4	3-0	49	#4	3-0
t1	str	3	#4	12-6	3	#4	13-0	3	#4	13-0	3	#4	14-3	3	#4	15-0	3	#4	15-6	3	#4	16-0	3	#4	16-6	3	#4	17-6	3	#4	18-0
t2	str	3	#4	18-9	3	#4	19-0	3	#4	19-9	3	#4	20-6	3	#4	21-3	3	#4	21-6	3	#4	22-3	3	#4	23-0	3	#4	23-6	3	#4	24-3
t3	str							1	#4	23-0	1	#4	24-0	1	#4	27-0	2	#4	27-0	2	#4	28-0	3	#4	29-0	3	#4	30-0	3	#4	30-6
t4	str	2	#4	12-0	2	#4	11-0	1	#4	11-0	2	#4	11-6	2	#4	14-0	2	#4	14-0	2	#4	15-0	2	#4	13-0	2	#4	16-0	2	#4	21-0
t5	str																														
t6	str																														
t7	str																														
t8	str																														
t9	str																														
t10	str	1	#4	25-6	1	#4	26-6	1	#4	28-0	1	#4	29-0	1	#4	31-0	1	#4	32-0	1	#4	33-6	1	#4	35-0	1	#4	36-6	1	#4	38-0

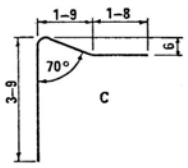

BEND

Registered Professional Engineer (Civil) CERTIFICATE EXPIRES DEC. 31, 19 ARIZONA, U.S.A.

DESIGN APPROVED	ARIZONA DEPARTMENT OF TRANSPORTATION HIGHWAYS DIVISION STANDARD DRAWINGS	REVISION
APPROVED FOR DISTRIBUTION	OUTLET APRON STEEL LIST 2:1 SLOPE	STANDARD No. B-17.20

DESIGN	KW	9-72	DRAWN	LAM	9-72	CHECKED	RLC	9-72

RIGHT ANGLE

Mark	Bend	90" Dia			96" Dia			102" Dia			108" Dia			114" Dia			120" Dia			126" Dia			132" Dia			138" Dia			144" Dia		
		No	Size	Lgth	No	Size	Lgth	No	Size	Lgth	No	Size	Lgth	No	Size	Lgth	No	Size	Lgth	No	Size	Lgth	No	Size	Lgth	No	Size	Lgth	No	Size	Lgth
h	C	16	#4	7-3	17	#4	7-3	17	#4	7-3	18	#4	7-3	18	#4	7-3	19	#4	7-3	20	#4	7-3	20	#4	7-3	21	#4	7-3	21	#4	7-3
j	str	1	#4	25-3	1	#4	26-3	1	#4	27-3	1	#4	28-6	1	#4	29-6	1	#4	30-6	1	#4	32-0	1	#4	33-0	1	#4	34-0	1	#4	35-3
r1	str	9	#4	11-0	9	#4	11-6	10	#4	12-3	10	#4	13-9	11	#4	13-6	11	#4	14-3	12	#4	15-0	12	#4	15-6	12	#4	16-0	13	#4	16-6
r2	str	4	#4	7-3	4	#4	8-0	4	#4	8-3	4	#4	8-0	4	#4	10-3	4	#4	10-0	4	#4	10-3	4	#4	11-3	4	#4	12-6	4	#4	12-0
r3	str	2	#4	4-6	2	#4	5-3	2	#4	5-0	2	#4	6-3	4	#4	5-3	4	#4	5-0	4	#4	6-3	4	#4	6-0	4	#4	7-0	4	#4	5-9
r4	str																														
s	str	33	#4	3-0	35	#4	3-0	36	#4	3-0	38	#4	3-0	39	#4	3-0	41	#4	3-0	42	#4	3-0	44	#4	3-0	46	#4	3-0	48	#4	3-0
t1	str	3	#4	8-6	3	#4	8-9	3	#4	9-3	3	#4	9-6	3	#4	10-0	3	#4	10-6	3	#4	11-0	3	#4	11-6	3	#4	12-0	3	#4	12-3
t2	str	3	#4	11-0	3	#4	11-0	3	#4	11-6	3	#4	12-0	3	#4	12-3	3	#4	12-9	3	#4	13-3	3	#4	13-9	3	#4	14-3	3	#4	14-6
t3	str	3	#4	13-0	3	#4	13-3	3	#4	13-9	3	#4	14-3	3	#4	14-6	3	#4	15-3	3	#4	15-6	3	#4	16-0	3	#4	16-6	3	#4	16-6
t4	str	3	#4	15-6	2	#4	15-3	2	#4	15-9	3	#4	16-6	3	#4	16-9	3	#4	17-6	3	#4	17-6	3	#4	18-0	3	#4	18-9	3	#4	18-9
t5	str				2	#4	17-0	2	#4	17-6	2	#4	18-6	3	#4	19-0	3	#4	19-6	2	#4	19-9	2	#4	20-3	3	#4	21-0	3	#4	21-0
t6	str																			2	#4	21-6	2	#4	22-0	2	#4	23-0	3	#4	23-0
t7	str																														

30° SKEW

Mark	Bend	90" Dia			96" Dia			102" Dia			108" Dia			114" Dia			120" Dia			126" Dia			132" Dia			138" Dia			144" Dia		
		No	Size	Lgth	No	Size	Lgth	No	Size	Lgth	No	Size	Lgth	No	Size	Lgth	No	Size	Lgth	No	Size	Lgth	No	Size	Lgth	No	Size	Lgth	No	Size	Lgth
h	C	14	#4	7-3	15	#4	7-3	16	#4	7-3	17	#4	7-3	17	#4	7-3	18	#4	7-3	18	#4	7-3	19	#4	7-3	20	#4	7-3	20	#4	7-3
j	str	1	#4	28-0	1	#4	29-3	1	#4	31-0	1	#4	32-6	1	#4	34-3	1	#4	35-0	1	#4	37-0	1	#4	39-0	1	#4	40-0	1	#4	42-0
r1	str	9	#4	11-0	10	#4	11-6	11	#4	12-3	11	#4	12-9	12	#4	13-0	12	#4	13-6	13	#4	14-0	13	#4	14-6	14	#4	15-0	14	#4	15-6
r2	str	2	#4	9-3	2	#4	9-3	2	#4	9-6	2	#4	10-6	2	#4	10-6	2	#4	11-3	2	#4	11-6	2	#4	12-6	2	#4	12-6	2	#4	13-3
r3	str	2	#4	7-3	2	#4	7-3	2	#4	7-6	2	#4	8-6	2	#4	8-6	2	#4	9-3	2	#4	9-6	2	#4	10-6	2	#4	10-6	2	#4	11-0
r4	str	2	#4	5-3	2	#4	5-3	2	#4	5-6	2	#4	6-6	2	#4	6-6	2	#4	7-3	2	#4	7-6	2	#4	8-6	2	#4	8-6	2	#4	9-0
r5	str	2	#4	3-3	2	#4	3-3	2	#4	3-6	2	#4	4-6	2	#4	4-6	2	#4	5-3	2	#4	5-3	2	#4	6-6	2	#4	6-6	2	#4	7-0
r6	str										1	#4	3-6	1	#4	3-6	2	#4	3-6	2	#4	3-6	2	#4	4-0	2	#4	4-6	2	#4	5-3
r7	str																						1	#4	3-6	1	#4	3-6	2	#4	3-6
r8	str																														
s	str	34	#4	3-0	35	#4	3-0	37	#4	3-0	39	#4	3-0	41	#4	3-0	43	#4	3-0	44	#4	3-0	47	#4	3-0	48	#4	3-0	50	#4	3-0
t1	str	2	#4	9-6	2	#4	10-0	2	#4	10-6	2	#4	11-0	2	#4	11-6	2	#4	12-0	2	#4	12-6	2	#4	13-0	2	#4	13-6	2	#4	14-0
t2	str	2	#4	12-0	2	#4	12-6	2	#4	13-0	2	#4	13-6	2	#4	14-0	2	#4	14-6	2	#4	15-0	2	#4	15-6	2	#4	16-0	2	#4	16-6
t3	str	2	#4	14-6	2	#4	15-0	2	#4	15-6	2	#4	16-0	2	#4	16-6	2	#4	17-0	2	#4	17-6	2	#4	18-0	2	#4	18-6	2	#4	19-0
t4	str	2	#4	16-9	2	#4	17-6	2	#4	18-0	2	#4	18-6	2	#4	19-0	2	#4	19-6	2	#4	20-0	2	#4	20-6	2	#4	21-0	2	#4	21-6
t5	str	1	#4	19-0	2	#4	19-9	2	#4	20-6	2	#4	21-0	2	#4	21-6	2	#4	22-0	2	#4	22-6	2	#4	23-0	2	#4	23-6	2	#4	24-0
t6	str										1	#4	22-6	1	#4	24-0	2	#4	24-6	2	#4	25-0	2	#4	25-0	2	#4	25-0	2	#4	26-6
t7	str																						1	#4	25-6	1	#4	27-6	1	#4	29-0
t8	str	2	#4	12-0	2	#4	9-0	2	#4	14-0	2	#4	11-0	2	#4	14-9	2	#4	11-9	2	#4	15-9	2	#4	14-0	2	#4	17-0	2	#4	18-3
t9	str																														
t10	str	1	#4	20-0	1	#4	21-3	1	#4	22-3	1	#4	23-6	1	#4	24-6	1	#4	26-0	1	#4	27-0	1	#4	28-3	1	#4	29-3	1	#4	30-3

15° SKEW

Mark	Bend	90" Dia			96" Dia			102" Dia			108" Dia			114" Dia			120" Dia			126" Dia			132" Dia			138" Dia			144" Dia		
		No	Size	Lgth	No	Size	Lgth	No	Size	Lgth	No	Size	Lgth	No	Size	Lgth	No	Size	Lgth	No	Size	Lgth	No	Size	Lgth	No	Size	Lgth	No	Size	Lgth
h	C	11	#4	7-3	12	#4	7-3	12	#4	7-3	13	#4	7-3	13	#4	7-3	14	#4	7-3	14	#4	7-3	15	#4	7-3	15	#4	7-3	16	#4	7-3
j	str	1	#4	23-9	1	#4	25-0	1	#4	26-0	1	#4	27-3	1	#4	28-6	1	#4	30-0	1	#4	31-0	1	#4	32-3	1	#4	33-3	1	#4	34-9
r1	str	8	#4	11-3	9	#4	11-9	9	#4	12-6	10	#4	13-0	11	#4	13-6	11	#4	14-0	11	#4	14-9	12	#4	15-6	12	#4	16-0	13	#4	16-3
r2	str	2	#4	9-3	2	#4	9-3	2	#4	10-9	2	#4	10-9	2	#4	10-6	2	#4	11-3	2	#4	12-9	2	#4	12-6	2	#4	13-9	2	#4	13-6
r3	str	2	#4	6-3	2	#4	6-6	2	#4	7-9	2	#4	7-6	2	#4	7-6	2	#4	8-6	2	#4	10-0	2	#4	9-6	2	#4	10-9	2	#4	10-6
r4	str	1	#4	4-9	1	#4	4-9	2	#4	4-9	2	#4	4-6	2	#4	4-6	2	#4	5-6	2	#4	7-0	2	#4	6-6	2	#4	7-9	2	#4	7-9
r5	str																			1	#4	5-6	1	#4	5-3	2	#4	5-0	2	#4	4-9
r6	str																														
r7	str																														
s	str	30	#4	3-0	33	#4	3-0	35	#4	3-0	36	#4	3-0	38	#4	3-0	39	#4	3-0	42	#4	3-0	43	#4	3-0	44	#4	3-0	46	#4	3-0
t1	str	2	#4	8-3	2	#4	9-0	2	#4	9-6	2	#4	9-9	2	#4	10-0	2	#4	10-6	2	#4	11-0	2	#4	11-3	2	#4	11-9	2	#4	12-3
t2	str	2	#4	9-9	2	#4	10-3	2	#4	10-6	2	#4	11-0	2	#4	11-6	2	#4	12-0	2	#4	12-3	2	#4	12-9	2	#4	13-3	2	#4	13-9
t3	str	2	#4	11-3	2	#4	11-9	2	#4	12-0	2	#4	12-6	2	#4	13-0	2	#4	13-6	2	#4	13-9	2	#4	14-3	2	#4	14-6	2	#4	15-3
t4	str	2	#4	12-6	2	#4	13-0	2	#4	13-6	2	#4	14-0	2	#4	14-6	2	#4	14-9	2	#4	15-3	2	#4	15-9	2	#4	16-0	2	#4	16-9
t5	str	2	#4	14-3	2	#4	14-6	2	#4	15-0	2	#4	15-6	2	#4	16-0	2	#4	16-3	2	#4	16-9	2	#4	17-3	2	#4	17-6	2	#4	18-3
t6	str							1	#4	16-3	2	#4	16-9	2	#4	17-3	2	#4	17-9	2	#4	18-3	2	#4	18-9	2	#4	19-0	2	#4	19-9
t7	str																1	#4	19-3	2	#4	19-9	2	#4	20-3	2	#4	20-6	2	#4	21-3
t8	str	2	#4	9-3	2	#4	11-3	2	#4	8-9	2	#4	9-9	2	#4	14-3	2	#4	9-9	2	#4	9-0	2	#4	9-6	2	#4	15-6	2	#4	17-9
t9	str																														
t10	str																														
t11	str	1	#4	16-0	1	#4	16-9	1	#4	17-9	1	#4	18-6	1	#4	19-6	1	#4	20-3	1	#4	21-0	1	#4	22-0	1	#4	22-9	1	#4	24-0

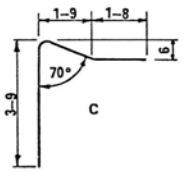

BEND

45° SKEW

Mark	Bend	90" Dia			96" Dia			102" Dia			108" Dia			114" Dia			120" Dia			126" Dia			132" Dia			138" Dia			144" Dia		
		No	Size	Lgth	No	Size	Lgth	No	Size	Lgth	No	Size	Lgth	No	Size	Lgth	No	Size	Lgth	No	Size	Lgth	No	Size	Lgth	No	Size	Lgth	No	Size	Lgth
h	C	18	#4	7-3	19	#4	7-3	20	#4	7-3	21	#4	7-3	22	#4	7-3	22	#4	7-3	23	#4	7-3	24	#4	7-3	25	#4	7-3	26	#4	7-3
j	str	1	#4	36-6	1	#4	33-3	1	#4	38-9	1	#4	40-9	1	#4	42-6	1	#4	44-0	1	#4	46-3	1	#4	48-0	1	#4	50-3	1	#4	51-9
r1	str	12	#4	10-3	12	#4	10-9	13	#4	11-3	13	#4	11-9	14	#4	12-3	15	#4	12-6	16	#4	13-0	16	#4	13-9	17	#4	14-0	17	#4	14-6
r2	str	3	#4	7-6	3	#4	8-3	3	#4	8-6	3	#4	9-6	3	#4	10-0	3	#4	9-9	3	#4	10-6	3	#4	11-0	3	#4	11-9	3	#4	12-3
r3	str	3	#4	5-6	3	#4	6-3	3	#4	6-6	3	#4	7-9	3	#4	7-9	3	#4	7-9	3	#4	8-6	3	#4	9-0	3	#4	9-9	3	#4	10-3
r4	str	3	#4	3-6	2	#4	4-0	2	#4	4-6	3	#4	5-6	3	#4	5-9	3	#4	6-0	3	#4	6-6	3	#4	7-0	3	#4	7-9	3	#4	8-9
r5	str				2	#4	3-0	2	#4	3-6	2	#4	4-0	3	#4	4-0	3	#4	4-0	2	#4	4-0	2	#4	5-0	3	#4	5-9	3	#4	6-3
r6	str																			2	#4	3-0	2	#4	4-0	3	#4	3-9	3	#4	4-3
r7	str																														
r8	str																														
r9	str																														
r10	str																														
s	str	39	#4	3-0	40	#4	3-0	42	#4	3-0	45	#4	3-0	47	#4	3-0	48	#4	3-0	50	#4	3-0	52	#4	3-0	54	#4	3-0	56	#4	3-0
t1	str	2	#4	12-0	2	#4	12-6	2	#4	13-0	2	#4	13-6	2	#4	14-6	2	#4	15-0	2	#4	15-6	2	#4	16-0	2	#4	16-9	2	#4	17-6
t2	str	2	#4	16-3	2	#4	16-9	2	#4	17-3	2	#4	17-9	2	#4	18-9	2	#4	19-3	2	#4	19-9	2	#4	20-0	2	#4	21-0	2	#4	22-0
t3	str	2	#4	20-6	2	#4	21-0	2	#4	21-6	2	#4	22-0	2	#4	23-0	2	#4	23-6	2	#4	24-0	2	#4	24-3	2	#4	25-6	2	#4	26-3
t4	str	2	#4	23-3	2	#4	24-0	2	#4	24-9	2	#4	26-0	2	#4	27-0	2	#4	27-9	2	#4	28-6	2	#4	28-6	2	#4	29-9	2	#4	30-6
t5	str	2	#4	12-0	2	#4	16-0	2	#4	17-0	2	#4	21-0	2	#4	21-0	2	#4	26-0	2	#4	27-6	2	#4	32-0	2	#4	33-0	2	#4	34-0
t6	str	2	#4	6-0	2	#4	7-0	2	#4	8-6	2	#4	12-6	2	#4	14-0	2	#4	17-3	2	#4	19-0	2	#4	23-0	2	#4	26-9	2	#4	30-0
t7	str										1	#4	7-6	2	#4	7-6	2	#4	9-0	2	#4	10-6	2	#4	14-0	2	#4	17-6	2	#4	19-6
t8	str																						1	#4	10-0	2	#4	9-0	2	#4	11-0
t9	str																														
t10	str	1	#4	26-0	1	#4	27-6	1	#4	28-9	1	#4	30-0	1	#4	31-6	1	#4	32-9	1	#4	34-6	1	#4	35-9	1	#4	37-6	1	#4	38-9

Registered Professional Engineer (Civil) CERTIFICATE EXPIRES DEC. 31, 19 ARIZONA, U.S.A.

DESIGN	K W	9-72	DRAWN	LAM	9-72	CHECKED	RLC	9-72

DESIGN APPROVED	ARIZONA DEPARTMENT OF TRANSPORTATION HIGHWAYS DIVISION STANDARD DRAWINGS	REVISION
APPROVED FOR DISTRIBUTION	OUTLET APRON STEEL LIST 4:1 SLOPE	STANDARD NO B-17.30

RIGHT ANGLE

Mark	Bend	90" Dia			96" Dia			102" Dia			108" Dia			114" Dia		
		No	Size	Lgth	No	Size	Lgth	No	Size	Lgth	No	Size	Lgth	No	Size	Lgth
h	C	17	#4	7-3	18	#4	7-3	18	#4	7-3	19	#4	7-3	20	#4	7-3
j	str	1	#4	26-6	1	#4	28-0	1	#4	29-0	1	#4	30-3	1	#4	31-6
r1	str	9	#4	12-6	9	#4	13-3	10	#4	14-0	10	#4	14-9	11	#4	15-6
r2	str	4	#4	7-6	4	#4	8-9	4	#4	8-9	4	#4	10-0	4	#4	10-9
r3	str	2	#4	5-0	2	#4	6-0	2	#4	6-0	4	#4	4-6	4	#4	4-3
r4	str															
s	str	34	#4	2-0	36	#4	2-0	39	#4	2-0	41	#4	2-6	42	#4	2-6
t1	str	3	#4	8-0	3	#4	8-9	3	#4	9-3	3	#4	9-6	3	#4	10-0
t2	str	3	#4	10-6	3	#4	11-0	3	#4	11-9	3	#4	11-9	3	#4	12-3
t3	str	3	#4	12-9	3	#4	13-0	3	#4	13-9	3	#4	14-0	3	#4	14-6
t4	str	3	#4	15-0	3	#4	15-6	3	#4	16-0	3	#4	16-3	3	#4	16-6
t5	str	2	#4	17-0	2	#4	17-6	3	#4	18-0	2	#4	18-6	2	#4	19-0
t6	str										2	#4	20-0	2	#4	20-6
t7	str															

Mark	Bend	120" Dia			126" Dia			132" Dia			138" Dia			144" Dia		
		No	Size	Lgth	No	Size	Lgth	No	Size	Lgth	No	Size	Lgth	No	Size	Lgth
h	C	20	#4	7-3	20	#4	7-3	21	#4	7-3	22	#4	7-3	22	#4	7-3
j	str	1	#4	32-9	1	#4	33-9	1	#4	35-0	1	#4	36-3	1	#4	37-6
r1	str	11	#4	16-3	11	#4	17-0	12	#4	17-9	12	#4	18-6	13	#4	19-3
r2	str	4	#4	12-0	4	#4	12-0	4	#4	12-0	4	#4	13-6	4	#4	13-3
r3	str	4	#4	6-9	4	#4	6-9	4	#4	6-9	4	#4	8-0	4	#4	7-9
r4	str										2	#4	5-3	2	#4	4-9
s	str	44	#4	2-6	47	#4	2-6	47	#4	3-0	48	#4	3-0	50	#4	3-0
t1	str	3	#4	10-0	3	#4	10-9	3	#4	11-3	3	#4	11-9	3	#4	12-0
t2	str	3	#4	13-0	3	#4	13-0	3	#4	13-6	3	#4	14-0	3	#4	14-0
t3	str	3	#4	15-3	3	#4	15-3	3	#4	15-9	3	#4	16-6	3	#4	17-0
t4	str	3	#4	17-6	3	#4	17-9	3	#4	18-0	3	#4	18-6	3	#4	19-0
t5	str	3	#4	19-6	3	#4	20-0	3	#4	20-0	3	#4	20-6	3	#4	20-9
t6	str	2	#4	21-6	3	#4	22-0	3	#4	22-3	2	#4	22-9	3	#4	23-0
t7	str										2	#4	24-3	2	#4	25-0

30° SKEW

Mark	Bend	90" Dia			96" Dia			102" Dia			108" Dia			114" Dia		
		No	Size	Lgth	No	Size	Lgth	No	Size	Lgth	No	Size	Lgth	No	Size	Lgth
h	C	17	#4	7-3	18	#4	7-3	18	#4	7-3	19	#4	7-3	20	#4	7-3
j	str	1	#4	32-0	1	#4	33-6	1	#4	34-0	1	#4	36-6	1	#4	38-0
r1	str	10	#4	12-9	11	#4	13-3	11	#4	14-0	12	#4	14-9	12	#4	15-6
r2	str	2	#4	11-3	2	#4	11-6	2	#4	12-3	2	#4	13-0	2	#4	14-0
r3	str	2	#4	9-6	2	#4	9-6	2	#4	10-3	2	#4	11-0	2	#4	12-0
r4	str	2	#4	7-0	2	#4	7-9	2	#4	8-6	2	#4	9-0	2	#4	10-3
r5	str	2	#4	5-3	2	#4	6-0	2	#4	6-6	2	#4	7-3	2	#4	8-3
r6	str	1	#4	4-9	2	#4	4-0	2	#4	4-9	2	#4	5-3	2	#4	6-3
r7	str										1	#4	4-3	2	#4	4-6
r8	str															
s	str	40	#4	3-0	42	#4	3-0	44	#4	3-0	45	#4	3-0	47	#4	3-0
t1	str	2	#4	9-6	2	#4	10-0	2	#4	10-6	2	#4	11-0	2	#4	11-6
t2	str	2	#4	12-0	2	#4	12-6	2	#4	13-0	2	#4	13-6	2	#4	14-0
t3	str	2	#4	14-6	2	#4	15-0	2	#4	15-6	2	#4	16-0	2	#4	16-6
t4	str	2	#4	17-0	2	#4	17-6	2	#4	18-0	2	#4	18-6	2	#4	19-0
t5	str	2	#4	19-6	2	#4	20-0	2	#4	20-0	2	#4	21-0	2	#4	21-6
t6	str	1	#4	22-0	2	#4	22-0	2	#4	23-0	2	#4	23-0	2	#4	24-0
t7	str										1	#4	26-0	2	#4	26-0
t8	str															
t9	str	2	#4	12-0	2	#4	12-0	2	#4	14-3	2	#4	12-6	2	#4	12-9
t10	str	1	#4	23-9	1	#4	24-0	1	#4	25-9	1	#4	26-9	1	#4	28-0

Mark	Bend	120" Dia			126" Dia			132" Dia			138" Dia			144" Dia		
		No	Size	Lgth	No	Size	Lgth	No	Size	Lgth	No	Size	Lgth	No	Size	Lgth
h	C	20	#4	7-3	21	#4	7-3	22	#4	7-3	22	#4	7-3	23	#4	7-3
j	str	1	#4	39-0	1	#4	40-0	1	#4	41-0	1	#4	42-0	1	#4	43-0
r1	str	12	#4	16-0	13	#4	16-6	13	#4	17-6	14	#4	18-0	14	#4	18-3
r2	str	2	#4	14-9	2	#4	14-9	2	#4	16-0	2	#4	16-0	2	#4	17-0
r3	str	2	#4	12-9	2	#4	13-0	2	#4	14-0	2	#4	14-0	2	#4	15-3
r4	str	2	#4	10-9	2	#4	11-0	2	#4	12-0	2	#4	12-0	2	#4	13-3
r5	str	2	#4	9-0	2	#4	9-0	2	#4	10-0	2	#4	10-0	2	#4	11-3
r6	str	2	#4	7-0	2	#4	7-0	2	#4	8-0	2	#4	8-0	2	#4	9-3
r7	str	2	#4	5-0	2	#4	5-0	2	#4	6-3	2	#4	6-0	2	#4	7-6
r8	str	1	#4	4-0				2	#4	4-3	2	#4	4-0	2	#4	5-6
s	str	49	#4	3-0	51	#4	3-0	52	#4	3-0	54	#4	3-0	56	#4	3-0
t1	str	2	#4	12-0	2	#4	12-6	2	#4	13-0	2	#4	13-0	2	#4	14-0
t2	str	2	#4	14-6	2	#4	15-0	2	#4	15-6	2	#4	15-6	2	#4	16-6
t3	str	2	#4	17-0	2	#4	17-6	2	#4	18-0	2	#4	18-0	2	#4	19-0
t4	str	2	#4	19-6	2	#4	20-0	2	#4	20-6	2	#4	20-3	2	#4	21-6
t5	str	2	#4	22-0	2	#4	22-6	2	#4	22-9	2	#4	22-9	2	#4	24-0
t6	str	2	#4	24-6	2	#4	25-0	2	#4	25-0	2	#4	25-0	2	#4	26-6
t7	str	2	#4	26-6	2	#4	27-0	2	#4	27-6	2	#4	27-6	2	#4	29-0
t8	str				1	#4	28-6	2	#4	27-0	2	#4	30-0	2	#4	30-6
t9	str	2	#4	15-0	2	#4	13-3	2	#4	13-0	2	#4	14-0	2	#4	20-6
t10	str	1	#4	29-0	1	#4	30-0	1	#4	31-0	1	#4	32-0	1	#4	33-0

15° SKEW

Mark	Bend	90" Dia			96" Dia			102" Dia			108" Dia			114" Dia		
		No	Size	Lgth	No	Size	Lgth	No	Size	Lgth	No	Size	Lgth	No	Size	Lgth
h	C	13	#4	7-3	13	#4	7-3	14	#4	7-3	15	#4	7-3	15	#4	7-3
j	str	1	#4	25-9	1	#4	27-0	1	#4	28-3	1	#4	29-9	1	#4	31-0
r1	str	9	#4	13-3	9	#4	14-0	10	#4	14-9	10	#4	15-6	11	#4	16-0
r2	str	2	#4	11-0	2	#4	12-0	2	#4	11-6	2	#4	13-0	2	#4	12-9
r3	str	2	#4	7-6	2	#4	9-0	2	#4	8-6	2	#4	10-0	2	#4	10-0
r4	str	2	#4	5-0	2	#4	6-0	2	#4	6-0	2	#4	7-6	2	#4	7-0
r5	str				2	#4	4-0	1	#4	4-6	2	#4	5-0	2	#4	4-0
r6	str															
r7	str															
s	str	36	#4	3-0	38	#4	3-0	41	#4	3-0	42	#4	3-0	44	#4	3-0
t1	str	2	#4	8-6	2	#4	9-0	2	#4	9-3	2	#4	9-6	2	#4	9-9
t2	str	2	#4	10-0	2	#4	10-6	2	#4	11-0	2	#4	11-3	2	#4	11-6
t3	str	2	#4	11-3	2	#4	11-9	2	#4	12-3	2	#4	12-6	2	#4	13-0
t4	str	2	#4	13-0	2	#4	13-0	2	#4	13-6	2	#4	14-3	2	#4	14-6
t5	str	2	#4	14-3	2	#4	14-6	2	#4	15-0	2	#4	15-9	2	#4	16-0
t6	str	2	#4	15-6	2	#4	16-0	2	#4	16-6	2	#4	17-0	2	#4	17-6
t7	str	1	#4	17-0	2	#4	17-6	2	#4	18-0	2	#4	18-6	2	#4	19-0
t8	str	1	#4	9-0				1	#4	15-6	1	#4	20-0	2	#4	20-0
t9	str										1	#4	14-0			
t10	str															
t11	str	1	#4	17-3	1	#4	18-3	1	#4	19-3	1	#4	20-6	1	#4	21-6

Mark	Bend	120" Dia			126" Dia			132" Dia			138" Dia			144" Dia		
		No	Size	Lgth	No	Size	Lgth	No	Size	Lgth	No	Size	Lgth	No	Size	Lgth
h	C	16	#4	7-3	16	#4	7-3	17	#4	7-3	18	#4	7-3	19	#4	7-3
j	str	1	#4	32-3	1	#4	33-6	1	#4	34-6	1	#4	36-3	1	#4	37-9
r1	str	11	#4	16-9	12	#4	17-6	12	#4	18-3	12	#4	19-0	13	#4	19-9
r2	str	2	#4	14-0	2	#4	14-6	2	#4	15-6	2	#4	17-0	2	#4	17-0
r3	str	2	#4	11-6	2	#4	12-0	2	#4	12-6	2	#4	14-0	2	#4	14-0
r4	str	2	#4	8-6	2	#4	8-6	2	#4	9-6	2	#4	11-6	2	#4	11-6
r5	str	2	#4	6-0	2	#4	5-0	2	#4	7-0	2	#4	8-6	2	#4	8-6
r6	str							1	#4	5-0	2	#4	5-6	2	#4	5-6
r7	str													1	#4	4-0
s	str	47	#4	3-0	49	#4	3-0	51	#4	3-0	53	#4	3-0	55	#4	3-0
t1	str	2	#4	10-3	2	#4	11-0	2	#4	11-3	2	#4	11-9	2	#4	12-3
t2	str	2	#4	12-0	2	#4	12-6	2	#4	13-0	2	#4	13-6	2	#4	14-0
t3	str	2	#4	13-6	2	#4	14-0	2	#4	14-6	2	#4	15-0	2	#4	15-3
t4	str	2	#4	15-0	2	#4	15-6	2	#4	16-0	2	#4	16-6	2	#4	16-9
t5	str	2	#4	16-6	2	#4	17-0	2	#4	17-6	2	#4	18-0	2	#4	18-3
t6	str	2	#4	18-0	2	#4	18-3	2	#4	18-9	2	#4	19-3	2	#4	19-9
t7	str	2	#4	19-0	2	#4	19-6	2	#4	20-0	2	#4	20-6	2	#4	21-3
t8	str	2	#4	20-6	2	#4	21-0	2	#4	21-6	2	#4	22-0	2	#4	22-6
t9	str	1	#4	22-0	2	#4	22-6	2	#4	22-6	2	#4	23-6	2	#4	24-0
t10	str							1	#4	24-0	1	#4	25-0	2	#4	25-6
t11	str	1	#4	22-3	1	#4	23-0	1	#4	24-3	1	#4	25-3	1	#4	26-6

45° SKEW

Mark	Bend	90" Dia.			96" Dia.			102" Dia			108" Dia			114" Dia		
		No	Size	Lgth	No	Size	Lgth	No	Size	Lgth	No	Size	Lgth	No	Size	Lgth
h	C	20	#4	7-3	21	#4	7-3	22	#4	7-3	23	#4	7-3	24	#4	7-3
j	str	1	#4	39-0	1	#4	41-0	1	#4	43-0	1	#4	45-0	1	#4	47-0
r1	str	12	#4	11-6	13	#4	11-9	13	#4	12-9	14	#4	13-6	15	#4	14-0
r2	str	2	#4	9-9	2	#4	10-6	2	#4	11-6	2	#4	11-9	2	#4	12-0
r3	str	2	#4	8-6	2	#4	9-0	2	#4	10-0	2	#4	10-3	2	#4	10-6
r4	str	2	#4	7-3	2	#4	7-6	2	#4	8-9	2	#4	9-0	2	#4	9-3
r5	str	2	#4	6-0	2	#4	6-3	2	#4	7-3	2	#4	7-6	2	#4	7-9
r6	str	2	#4	4-6	2	#4	4-9	2	#4	6-0	2	#4	6-0	2	#4	6-6
r7	str				1	#4	4-0	2	#4	4-6	2	#4	4-6	2	#4	5-0
r8	str													2	#4	3-6
r9	str															
r10	str															
s	str	41	#4	3-0	43	#4	3-0	45	#4	3-0	47	#4	3-0	49	#4	3-0
t1	str	2	#4	12-0	2	#4	12-6	2	#4	13-6	2	#4	14-0	2	#4	14-9
t2	str	2	#4	16-3	2	#4	16-9	2	#4	17-6	2	#4	18-3	2	#4	19-0
t3	str	2	#4	20-6	2	#4	21-0	2	#4	21-9	2	#4	22-6	2	#4	23-6
t4	str	2	#4	25-0	2	#4	25-9	2	#4	26-0	2	#4	26-9	2	#4	27-9
t5	str	2	#4	17-6	2	#4	22-6	2	#4	25-0	2	#4	28-0	2	#4	31-0
t6	str	2	#4	10-6	2	#4	14-6	2	#4	16-6	2	#4	20-0	2	#4	21-0
t7	str	1	#4	7-0	1	#4	10-0	2	#4	9-6	2	#4	11-6	2	#4	13-0
t8	str										1	#4	7-6	1	#4	8-6
t9	str															
t10	str	1	#4	28-6	1	#4	30-0	1	#4	31-6	1	#4	33-0	1	#4	34-6

Mark	Bend	120" Dia			126" Dia.			132" Dia.			138" Dia.			144" Dia		
		No	Size	Lgth	No	Size	Lgth	No	Size	Lgth	No	Size	Lgth	No	Size	Lgth
h	C	25	#4	7-3	26	#4	7-3	27	#4	7-3	28	#4	7-3	29	#4	7-3
j	str	1	#4	49-0	1	#4	51-0	1	#4	53-0	1	#4	55-0	1	#4	57-0
r1	str	15	#4	14-9	16	#4	15-3	16	#4	16-0	17	#4	16-6	17	#4	17-0
r2	str	2	#4	13-0	2	#4	13-6	2	#4	14-3	2	#4	14-6	2	#4	15-3
r3	str	2	#4	11-6	2	#4	12-0	2	#4	13-0	2	#4	13-3	2	#4	14-0
r4	str	2	#4	10-3	2	#4	10-6	2	#4	11-6	2	#4	11-9	2	#4	12-6
r5	str	2	#4	9-0	2	#4	9-3	2	#4	10-3	2	#4	10-6	2	#4	11-0
r6	str	2	#4	7-6	2	#4	7-9	2	#4	8-6	2	#4	9-0	2	#4	9-9
r7	str	2	#4	6-0	2	#4	6-3	2	#4	7-3	2	#4	7-6	2	#4	8-3
r8	str	2	#4	4-6	2	#4	5-0	2	#4	6-0	2	#4	6-3	2	#4	6-9
r9	str	1	#4	4-0	1	#4	4-3	2	#4	4-6	2	#4	4-9	2	#4	5-6
r10	str										1	#4	4-0	2	#4	4-0
s	str	52	#4	3-0	54	#4	3-0	56	#4	3-0	58	#4	3-0	60	#4	3-0
t1	str	2	#4	15-3	2	#4	15-9	2	#4	16-3	2	#4	17-0	2	#4	17-3
t2	str	2	#4	19-6	2	#4	20-0	2	#4	20-6	2	#4	21-3	2	#4	21-9
t3	str	2	#4	23-9	2	#4	24-3	2	#4	24-6	2	#4	25-6	2	#4	26-3
t4	str	2	#4	28-0	2	#4	28-6	2	#4	29-0	2	#4	29-9	2	#4	30-6
t5	str	2	#4	32-6	2	#4	32-9	2	#4	33-6	2	#4	34-6	2	#4	35-0
t6	str	2	#4	25-3	2	#4	26-0	2	#4	31-9	2	#4	33-0	2	#4	38-0
t7	str	2	#4	17-3	2	#4	18-6	2	#4	23-3	2	#4	24-0	2	#4	28-0
t8	str	2	#4	9-3	2	#4	10-0	2	#4	15-6	2	#4	15-6	2	#4	20-0
t9	str							1	#4	11-6	1	#4	11-0	2	#4	12-6
t10	str	1	#4	36-0	1	#4	37-6	1	#4	39-0	1	#4	40-0	1	#4	42-0

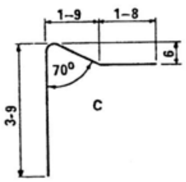

BEND

Registered Professional Engineer (Civil)
CERTIFICATE EXPIRES
BUECHLER
DEC. 31, 19—
ARIZONA, U.S.A.

DESIGN APPROVED	ARIZONA DEPARTMENT OF TRANSPORTATION HIGHWAYS DIVISION STANDARD DRAWINGS	REVISION
APPROVED FOR DISTRIBUTION	OUTLET APRON STEEL LIST 6:1 SLOPE	STANDARD B-17.4(

DESIGN	KW	9-72	DRAWN	LAM	9-72	CHECKED	RLC	9-72

DESIGN	DHY	9-72	NO.	DESCRIPTION OF REVISIONS	MADE BY	DATE	NO.	DESCRIPTION OF REVISIONS	MADE BY	DATE
DRAWN	GFB	2-73	①	Change Notes & S1 bars	WEB	12-82	④	Removed Drainage from Typ. Sect.	JM	3-88
CHECKED	NAB	3-73	②	Add bar in F.F.	CH	5-85	⑤			
			③	Changed Reinf. Note	CH	10-86	⑥			

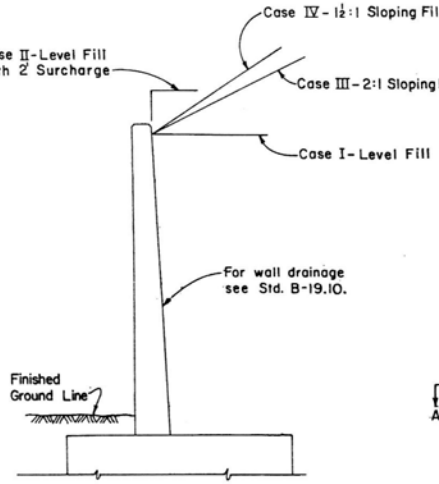

TYPICAL SECTION

Showing Design Cases & Drainage

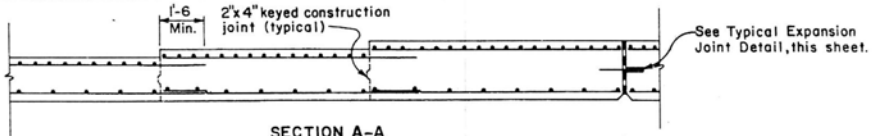

SECTION A-A

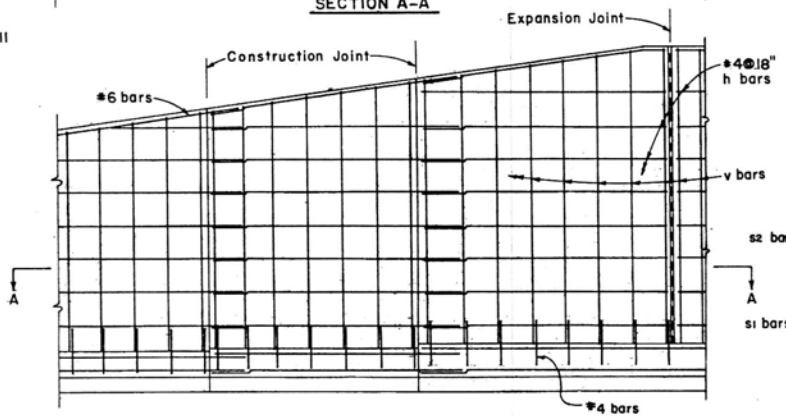

TYPICAL ELEVATION

Outside Face Reinforcing

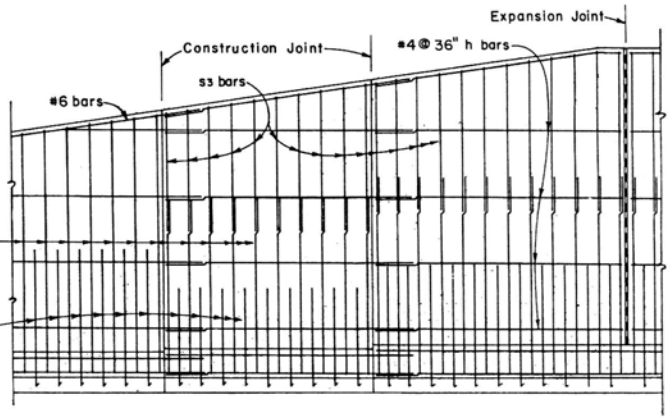

TYPICAL ELEVATION

Inside Face Reinforcing

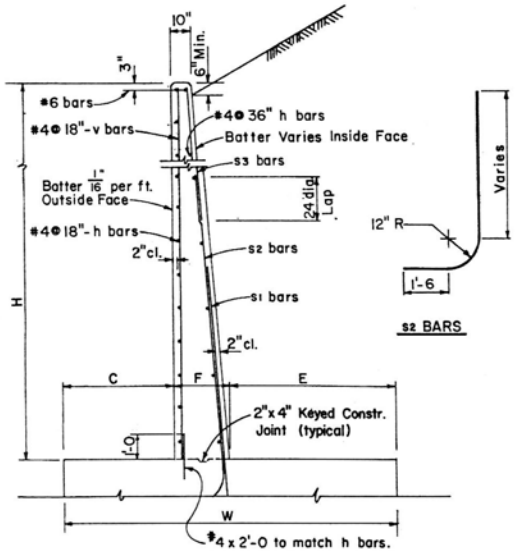

S2 BARS

TYPICAL STEM DETAIL

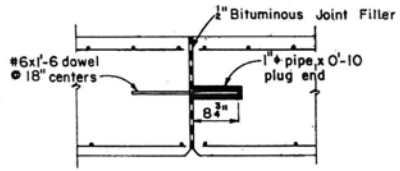

TYPICAL EXPANSION JOINT DETAIL

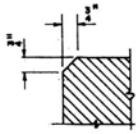

Chamfer all exposed corners thus unless otherwise noted.

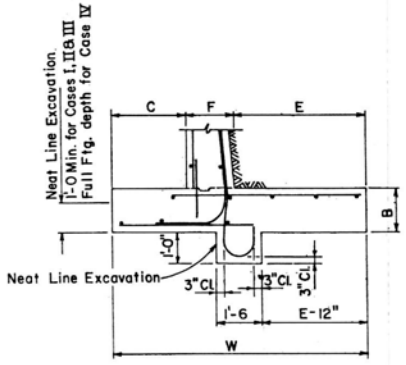

SPREAD FOOTING DETAIL

See Footing Steel Detail on B-18.20

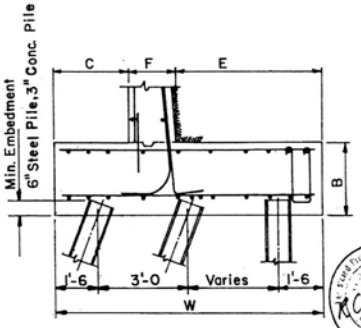

PILE FOOTING DETAIL

See Footing Steel Detail on B-18.30 or B-18.40

GENERAL NOTES

Construction - Arizona Department of Transportation Standard Specifications for Road and Bridge Construction.

Design - AASHTO Std. Specs. for Highway Bridges 1977.

Dead Load - Weight of backfill = 120 P.C.F.
Angle of Internal Friction = 33° 15'.

Stresses - Class S Concrete f'_c = 3000 P.S.I.

All Concrete shall be Class S.

Reinforcing Steel shall conform to A.S.T.M. Spec. A-615

Bar sizes #6 and smaller shall be Gr. 40 or Gr. 60; f_s = 20,000 P.S.I.

Bar sizes #7 and larger shall be Grade 60, f_s = 24,000 P.S.I.

All Reinforcing Steel shall have 2" clear cover unless noted otherwise.

JOINT NOTE

All Retaining Walls shall have Construction Joints spaced at not more than 30'-0 apart or as shown. Reinforcing Steel shall project through the joint.

Expansion Joints shall be provided at intervals not exceeding 90'-0.

Footings may be continuous with no joint.

BATTERED PILE NOTE

Batter Piles 3:12 for Cases I & II, 4:12 for Cases III & IV.

DESIGN APPROVED	ARIZONA DEPARTMENT OF TRANSPORTATION HIGHWAYS DIVISION STANDARD DRAWINGS	REVISION 7-88
APPROVED FOR DISTRIBUTION	CANTILEVER RETAINING WALL DETAILS	STANDARD NO. B-18.10

DESIGN	DHY	10-72	NO.	DESCRIPTION OF REVISIONS	MADE BY	DATE
DRAWN	GFB	3-73	①	Si bars	WEB	12-92
CHECKED	NAB	3-73	②			
			③			

CASE I - LEVEL FILL

Dimensions						Steel List																		Quantities		Max. Toe Press. Lbs. / Sq. Ft.
						S1			S2			S3			h	v	b			f1	t			f2			
H	W	B	C	F	E	Size	Spacing	Length	Size	Spacing	Length	Size	Spacing	Length	Number ⊕	Length	Size	Spacing	Length	Number ⊕	Size	Spacing	Length	Number ⊕	Concrete Cu. Yds. / Lin. Ft.	Steel Lbs. / Lin. Ft.	
4'	2'-9	1'-3	0'-9	1'-0	1'-0	#5	12"	6'-6							3	3'-9	#5	12"	2'-0	2	#5	12"	2'-3	3	.319	21.23	980
5'	3'-0	1'-3	1'-0	1'-0	1'-0	#5	12"	7'-6							4	4'-9	#5	12"	2'-3	2	#5	12"	2'-3	3	.364	23.65	1190
6'	3'-3	1'-3	1'-1	1'-0	1'-2	#5	12"	8'-6							5	5'-9	#5	12"	2'-6	2	#5	12"	2'-6	3	.410	26.32	1510
7'	3'-9	1'-3	1'-3	1'-0	1'-6	#5	12"	9'-6							6	6'-9	#5	12"	2'-6	2	#5	12"	2'-9	3	.467	28.74	1650
8'	4'-3	1'-3	1'-5	1'-0	1'-10	#5	12"	10'-6							7	7'-9	#5	12"	2'-9	3	#5	12"	3'-3	3	.524	32.35	1790
9'	4'-9	1'-3	1'-7	1'-0	2'-2	#5	12"	11'-6							8	8'-9	#5	12"	3'-0	3	#5	12"	3'-6	3	.581	35.02	1930
10'	5'-3	1'-3	1'-9	1'-0	2'-6	#6	12"	12'-6							9	9'-9	#5	12"	3'-0	3	#5	12"	3'-9	3	.638	43.19	2070
11'	5'-9	1'-3	1'-11	1'-0	2'-10	#5	13"	6'-6	#5	13"	13'-9				10	10'-9	#5	13"	3'-3	3	#6	13"	4'-3	4	.695	47.66	2210
12'	6'-3	1'-3	2'-1	1'-0	3'-2	#6	12"	7'-6	#5	12"	14'-9				11	11'-9	#5	12"	3'-6	3	#5	6"	4'-6	4	.752	59.95	2350
13'	6'-9	1'-3	2'-3	1'-0	3'-6	#7	11"	8'-6	#5	11"	15'-9				12	12'-9	#5	11"	3'-6	3	#7	11"	5'-3	4	.809	73.94	2490
14'	7'-0	1'-3	2'-4	1'-1	3'-7	#8	14"	9'-0	#6	14"	16'-9				13	13'-9	#6	14"	3'-9	3	#6	7"	5'-0	4	.877	82.35	2810
15'	7'-6	1'-3	2'-6	1'-2	3'-10	#8	12"	9'-6	#6	12"	17'-9				14	14'-9	#6	12"	4'-0	3	#6	6"	5'-3	4	.958	97.41	2950
16'	8'-0	1'-3	2'-8	1'-3	4'-1	#8	12"	9'-3	#7	12"	11'-3	#5	12"	8'-9	15	15'-9	#5	6"	4'-3	3	#7	6"	5'-9	4	1.043	113.90	3090
17'	8'-6	1'-4	2'-10	1'-4	4'-4	#8	11"	9'-9	#7	11"	12'-0	#5	11"	9'-3	16	16'-9	#5	5½"	4'-6	3	#7	5½"	6'-0	4	1.157	128.50	3240
18'	9'-0	1'-5	3'-0	1'-5	4'-7	#9	11"	10'-9	#7	11"	13'-0	#5	11"	9'-3	17	17'-9	#5	5½"	4'-9	4	#7	5½"	6'-3	5	1.278	146.35	3480
19'	9'-6	1'-6	3'-2	1'-7	4'-9	#10	14"	11'-9	#8	14"	13'-3	#6	14"	10'-3	18	18'-9	#6	7"	5'-0	4	#8	7"	7'-3	6	1.434	163.04	3680
20'	10'-0	1'-7	3'-4	1'-8	5'-0	#10	13"	12'-0	#8	13"	14'-0	#6	13"	10'-9	19	19'-9	#6	6½"	5'-3	4	#8	6½"	7'-3	6	1.568	178.52	3880

CASE II - LEVEL FILL WITH 2' SURCHARGE

Dimensions						Steel List																		Quantities		Max. Toe Press. Lbs. / Sq. Ft.
						S1			S2			S3			h	v	b			f1	t			f2			
H	W	B	C	F	E	Size	Spacing	Length	Size	Spacing	Length	Size	Spacing	Length	Number ⊕	Length	Size	Spacing	Length	Number ⊕	Size	Spacing	Length	Number ⊕	Concrete Cu. Yds. / Lin. Ft.	Steel Lbs. / Lin. Ft.	
4'	3'-3	1'-3	1'-1	1'-0	1'-2	#5	12"	6'-6							3	3'-9	#5	12"	2'-6	2	#5	12"	2'-6	3	.342	22.01	1180
5'	3'-6	1'-3	1'-2	1'-0	1'-4	#5	12"	7'-6							4	4'-9	#5	12"	2'-6	2	#5	12"	2'-9	3	.387	24.43	1530
6'	4'-0	1'-3	1'-4	1'-0	1'-8	#5	12"	8'-6							5	5'-9	#5	12"	2'-9	2	#5	12"	3'-0	3	.444	27.10	1700
7'	4'-6	1'-3	1'-6	1'-0	2'-0	#5	12"	9'-6							6	6'-9	#5	12"	2'-9	3	#5	12"	3'-3	3	.502	30.19	1860
8'	5'-0	1'-3	1'-8	1'-0	2'-4	#5	9"	10'-6							7	7'-9	#5	12"	3'-0	3	#5	12"	3'-9	3	.559	36.78	2020
9'	5'-6	1'-3	1'-10	1'-0	2'-8	#5	14"	6'-0	#5	14"	11'-9				8	8'-9	#5	14"	3'-3	3	#6	14"	4'-0	4	.616	40.89	2170
10'	6'-0	1'-3	2'-0	1'-0	3'-0	#5	11"	6'-6	#5	11"	12'-9				9	9'-9	#5	11"	3'-3	3	#6	11"	4'-3	4	.673	50.60	2330
11'	6'-6	1'-3	2'-2	1'-0	3'-4	#7	12"	8'-3	#5	12"	13'-9				10	10'-9	#5	12"	3'-6	3	#6	9"	4'-9	4	.730	63.50	2480
12'	7'-0	1'-3	2'-4	1'-1	3'-7	#8	14"	8'-9	#6	14"	14'-9				11	11'-9	#6	14"	3'-9	3	#6	7"	5'-0	4	.806	76.98	2630
13'	7'-6	1'-3	2'-6	1'-2	3'-10	#8	12"	9'-0	#6	12"	15'-9				12	12'-9	#6	12"	4'-0	3	#6	6"	5'-3	4	.884	90.84	2780
14'	8'-0	1'-3	2'-8	1'-3	4'-1	#8	13"	9'-3	#7	13"	11'-0	#5	13"	7'-0	13	13'-9	#5	6½"	4'-3	3	#7	6½"	5'-9	4	.966	102.66	2940
15'	8'-6	1'-3	2'-10	1'-4	4'-4	#8	11"	9'-3	#7	11"	11'-3	#5	11"	7'-9	14	14'-9	#5	5½"	4'-6	3	#7	5½"	6'-0	4	1.051	121.44	3090
16'	9'-0	1'-5	3'-0	1'-5	4'-7	#9	11"	10'-9	#7	11"	12'-6	#5	11"	7'-9	15	15'-9	#5	5½"	4'-9	4	#7	5½"	6'-3	5	1.195	141.30	3340
17'	9'-6	1'-6	3'-2	1'-6	4'-10	#9	10"	10'-9	#7	10"	13'-0	#5	10"	8'-3	16	16'-9	#5	5"	5'-0	4	#7	5"	6'-9	5	1.318	158.86	3540
18'	10'-0	1'-7	3'-4	1'-8	5'-0	#9	12"	11'-3	#8	12"	13'-6	#6	12"	9'-3	17	17'-9	#6	6"	5'-3	4	#8	6"	7'-3	6	1.475	171.61	3750
19'	10'-6	1'-8	3'-6	1'-9	5'-3	#10	12"	12'-6	#8	12"	14'-6	#6	12"	9'-3	18	18'-9	#6	6"	5'-6	4	#8	6"	7'-6	6	1.613	193.01	3950
20'	11'-0	1'-9	3'-8	1'-10	5'-6	#10	11"	13'-0	#8	11"	15'-0	#6	11"	9'-9	19	19'-9	#6	5½"	5'-9	4	#8	5½"	7'-9	6	1.756	215.85	4150

CASE III - 2:1 SLOPING FILL

Dimensions						Steel List																		Quantities		Max. Toe Press. Lbs. / Sq. Ft.
						S1			S2			S3			h	v	b			f1	t			f2			
H	W	B	C	F	E	Size	Spacing	Length	Size	Spacing	Length	Size	Spacing	Length	Number ⊕	Length	Size	Spacing	Length	Number ⊕	Size	Spacing	Length	Number ⊕	Concrete Cu. Yds. / Lin. Ft.	Steel Lbs. / Lin. Ft.	
4'	2'-6	1'-3	0'-9	1'-0	0'-9	#5	12"	6'-6							3	3'-9	#5	12"	2'-0	2	#5	12"	2'-0	3	.307	20.97	1290
5'	3'-0	1'-3	0'-11	1'-0	1'-1	#5	12"	7'-6							4	4'-9	#5	12"	2'-3	2	#5	12"	2'-6	3	.364	23.91	1520
6'	3'-6	1'-3	1'-1	1'-0	1'-5	#5	12"	8'-6							5	5'-9	#5	12"	2'-6	2	#5	12"	2'-9	3	.421	26.58	1740
7'	4'-0	1'-3	1'-3	1'-0	1'-9	#5	12"	9'-6							6	6'-9	#5	12"	2'-6	2	#5	12"	3'-0	3	.478	29.00	1960
8'	4'-6	1'-3	1'-6	1'-0	2'-0	#5	12"	10'-6							7	7'-9	#5	12"	2'-9	3	#5	12"	3'-3	3	.536	32.35	2120
9'	5'-0	1'-3	1'-8	1'-0	2'-4	#5	9"	11'-6							8	8'-9	#5	12"	3'-0	3	#5	12"	3'-9	3	.593	39.28	2340
10'	5'-6	1'-3	1'-10	1'-0	2'-8	#5	14"	6'-6	#5	14"	12'-9				9	9'-9	#5	14"	3'-3	3	#6	14"	4'-0	4	.650	43.30	2560
11'	6'-0	1'-3	2'-0	1'-0	3'-0	#6	12"	7'-0	#5	12"	13'-9				10	10'-9	#5	12"	3'-3	3	#5	6"	4'-3	4	.707	56.26	2780
12'	6'-6	1'-3	2'-2	1'-0	3'-4	#7	11"	7'-9	#5	11"	14'-9				11	11'-9	#5	11"	3'-6	3	#5	5½"	4'-9	4	.764	69.12	3000
13'	7'-3	1'-3	2'-5	1'-1	3'-9	#8	14"	9'-0	#6	14"	15'-9				12	12'-9	#5	7"	3'-9	3	#7	7"	5'-6	4	.853	88.23	3030
14'	7'-9	1'-3	2'-7	1'-2	4'-0	#8	12"	9'-0	#6	12"	16'-9				13	13'-9	#5	6"	4'-0	3	#7	6"	5'-9	4	.933	103.52	3250
15'	8'-3	1'-5	2'-9	1'-3	4'-3	#8	12"	9'-3	#7	12"	11'-0	#5	12"	8'-3	14	14'-9	#5	6"	4'-3	3	#7	6"	6'-0	4	1.067	112.78	3590
16'	8'-9	1'-6	2'-11	1'-5	4'-5	#8	11"	9'-6	#7	11"	11'-6	#5	11"	8'-9	15	15'-9	#5	5½"	4'-9	3	#7	5½"	6'-3	5	1.208	127.33	3880
17'	9'-3	1'-7	3'-1	1'-6	4'-8	#9	13"	10'-6	#8	13"	12'-6	#6	13"	9'-3	16	16'-9	#6	6½"	5'-0	4	#8	6½"	7'-0	5	1.333	152.10	4160
18'	10'-0	1'-9	3'-4	1'-7	5'-1	#10	13"	11'-9	#8	13"	13'-0	#6	13"	9'-9	17	17'-9	#6	6½"	5'-3	4	#8	6½"	7'-6	6	1.509	172.70	4320
19'	10'-6	1'-11	3'-6	1'-9	5'-3	#10	12"	12'-3	#8	12"	13'-9	#6	12"	10'-3	18	18'-9	#6	6"	5'-6	4	#8	6"	7'-6	6	1.710	191.44	4670
20'	11'-3	2'-0	3'-9	1'-10	5'-8	#10	11"	12'-9	#8	11"	14'-3	#6	11"	10'-9	19	19'-9	#6	5½"	6'-0	4	#8	5½"	8'-0	6	1.877	216.42	4760

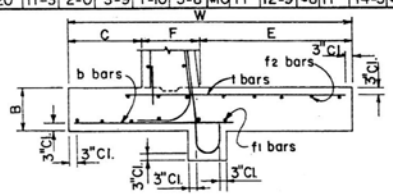

FOOTING STEEL DETAIL

CASE IV - 1½:1 SLOPING FILL

Dimensions						Steel List																		Quantities		Max. Toe Press. Lbs. / Sq. Ft.
						S1			S2			S3			h	v	b			f1	t			f2			
H	W	B	C	F	E	Size	Spacing	Length	Size	Spacing	Length	Size	Spacing	Length	Number ⊕	Length	Size	Spacing	Length	Number ⊕	Size	Spacing	Length	Number ⊕	Concrete Cu. Yds. / Lin. Ft.	Steel Lbs. / Lin. Ft.	
4'	3'-0	1'-3	1'-0	1'-0	1'-0	#5	12"	6'-6							3	3'-9	#5	12"	2'-3	2	#5	12"	2'-3	3	.330	21.49	1520
5'	3'-9	1'-3	1'-3	1'-0	1'-6	#5	12"	7'-6							4	4'-9	#5	12"	2'-6	2	#5	12"	2'-9	3	.399	24.43	1720
6'	4'-6	1'-3	1'-6	1'-0	2'-0	#5	12"	8'-6							5	5'-9	#5	12"	2'-9	3	#5	12"	3'-3	3	.468	28.03	1920
7'	5'-0	1'-3	1'-8	1'-0	2'-4	#5	11"	9'-6							6	6'-9	#5	11"	3'-0	3	#5	11"	3'-6	3	.525	32.23	2290
8'	5'-9	1'-3	1'-11	1'-0	2'-10	#6	10½"	10'-6							7	7'-9	#5	10½"	3'-3	3	#5	10½"	4'-0	4	.593	42.48	2490
9'	6'-6	1'-3	2'-2	1'-0	3'-4	#6	11"	6'-6	#5	11"	11'-9				8	8'-9	#5	11"	3'-6	3	#6	11"	4'-6	4	.662	52.30	2680
10'	7'-3	1'-4	2'-5	1'-0	3'-10	#7	11"	7'-9	#5	11"	13'-0				9	9'-9	#6	11"	3'-9	3	#6	11"	5'-3	4	.753	64.85	2950
11'	8'-0	1'-5	2'-8	1'-1	4'-3	#8	12"	8'-3	#6	12"	14'-0				10	10'-9	#6	9"	4'-0	3	#6	9"	5'-6	4	.866	81.22	3220
12'	8'-9	1'-6	2'-11	1'-3	4'-7	#8	12"	8'-0	#7	12"	9'-6	#5	12"	6'-9	11	11'-9	#7	12"	4'-6	3	#7	9"	6'-3	5	1.005	94.98	3500
13'	9'-6	1'-7	3'-2	1'-4	5'-0	#9	12"	9'-3	#7	12"	10'-9	#5	12"	6'-9	12	12'-9	#7	9"	4'-9	4	#6	6"	6'-3	5	1.134	114.88	3770
14'	10'-3	1'-8	3'-5	1'-6	5'-4	#9	11"	10'-0	#7	11"	11'-3	#5	11"	7'-3	13	13'-9	#8	11"	5'-3	4	#6	5½"	6'-9	5	1.293	131.67	4040
15'	11'-0	1'-9	3'-8	1'-8	5'-8	#9	12"	10'-3	#8	12"	11'-6	#6	12"	8'-3	14	14'-9	#9	12"	5'-9	4	#7	6"	7'-6	6	1.463	153.76	4310
16'	11'-9	1'-10	3'-11	1'-9	6'-1	#10	12"	11'-6	#8	12"	12'-9	#6	12"	8'-3	15	15'-9	#7	6"	6'-0	4	#8	6"	8'-3	6	1.619	191.22	4590
17'	12'-6	2'-0	4'-2	1'-11	6'-5	#10	11"	11'-9	#8	11"	13'-3	#6	11"	8'-9	16	16'-9	#7	5½"	6'-6	4	#8	5½"	8'-6	6	1.847	214.43	4930
18'	13'-3	2'-1	4'-5	2'-1	6'-9	#10	10"	12'-3	#8	10"	14'-0	#6	10"	9'-3	17	17'-9	#7	5"	6'-9	4	#8	5"	9'-0	6	2.050	244.51	5200
19'	14'-0	2'-2	4'-8	2'-3	7'-1	#11	10"	13'-0	#8	10"	15'-0	#6	10"	9'-3	18	18'-9	#9	7½"	7'-3	5	#8	5"	9'-6	7	2.264	279.31	5480
20'	14'-9	2'-3	4'-11	2'-5	7'-5	#11	10"	13'-3	#9	10"	16'-0	#6	10"	9'-3	19	19'-9	#8	5"	7'-9	5	#8	5"	10'-0	7	2.488	312.67	5750

⊕ Total number of bars in cross-section

NOTES:

See B-18.10 for General Notes and all other Details.
All h, v, f1 and f2 bars shall be #4 bars spaced as shown.

DESIGN APPROVED	ARIZONA DEPARTMENT OF TRANSPORTATION HIGHWAYS DIVISION STANDARD DRAWINGS	REVISION
APPROVED FOR DISTRIBUTION	CANTILEVER RETAINING WALLS ON SPREAD FOOTINGS	STANDARD NO. B-18.20

DESIGN	DHY	1-73	NO	DESCRIPTION OF REVISIONS	MADE BY	DATE
DRAWN	GFB	1-73	①	SI bars	WEB	12-88
CHECKED	NAB	3-73	②			
			③			

CASE I – LEVEL FILL

DIMENSIONS H	W	B	C	F	E	PILE PATTERN Type	Sp 1	Sp 2	STEEL LIST s1 Size	s1 Spacing	s1 Length	s2 Size	s2 Spacing	s2 Length	s3 Size	s3 Spacing	s3 Length	h Number✦	v Length	b Size	b Spacing	t Size	t Spacing	p1 Size	p2 Size	p3 Size	f3 Size✦	f3 Number✦	QUANTITIES Concrete CY/Lin.Ft.	Reinforcing Steel Lbs./Lin.Ft.
4'	4'-0	2'-3	1'-3	1'-0	1'-9	1	8'-0		#5	12"	5'-6							3	3'-9	#5	12"	#5	12"				#6		.469	36.9
5'	4'-3	2'-3	1'-6	1'-0	1'-9	1	8'-0		#5	12"	6'-6							4	4'-9	#5	12"	#5	12"	#6*			#6		.524	44.1
6'	4'-6	2'-3	1'-6	1'-0	2'-0	1	8'-0		#5	12"	7'-6							5	5'-9	#5	12"	#5	12"	#6*			#6		.579	46.8
7'	4'-9	2'-3	1'-9	1'-0	2'-0	1	8'-0		#5	12"	8'-6							6	6'-9	#5	12"	#5	12"	#6*			#6		.634	49.5
8'	5'-0	2'-3	1'-9	1'-0	2'-3	1	8'-0		#5	12"	9'-6							7	7'-9	#5	12"	#5	12"	#6*			#6		.688	52.1
9'	5'-6	2'-3	2'-0	1'-0	2'-6	1	8'-0		#5	12"	10'-6							8	8'-9	#5	12"	#5	12"	#7			#6		.764	63.1
10'	5'-9	2'-3	2'-0	1'-0	2'-9	1	8'-0		#6	12"	11'-6							9	9'-9	#5	12"	#5	12"	#8			#6		.819	74.8
11'	6'-0	2'-3	2'-0	1'-0	3'-0	1	8'-0		#5	13"	5'-6	#5	13"	14'-6				10	10'-9	#5	13"	#5	13"	#8			#6	2	.874	78.9
12'	6'-6	2'-3	2'-3	1'-0	3'-3	1	7'-6		#6	12"	6'-6	#5	12"	15'-6				11	11'-9	#5	12"	#5	12"	#8			#6	2	.949	88.7
13'	6'-9	2'-3	2'-3	1'-0	3'-6	1	6'-6		#7	11"	7'-3	#5	11"	16'-6				12	12'-9	#5	11"	#5	11"	#8			#6	2	1.004	100.9
14'	7'-0	2'-3	2'-6	1'-1	3'-5	1	6'-0		#8	14"	7'-9	#6	14"	17'-6				13	13'-9	#5	7"	#6	14"	#8			#6	2	1.080	113.4
15'	7'-3	2'-3	2'-6	1'-2	3'-7	2	8'-0	16'-0	#8	12"	7'-9	#6	12"	18'-6				14	14'-9	#5	12"	#5	9"	#6			#6	2	1.160	110.3
16'	7'-6	2'-3	2'-6	1'-3	3'-9	2	8'-0	16'-0	#8	12"	7'-9	#7	12"	12'-0	#5	12"	8'-9	15	15'-9	#5	12"	#5	8"	#6			#6	4	1.242	120.4
17'	8'-0	2'-3	2'-9	1'-4	3'-11	2	8'-0	16'-0	#8	11"	8'-0	#7	11"	12'-6	#5	11"	9'-3	16	16'-9	#5	5½"	#5	5½"	#6			#6	4	1.349	144.8
18'	8'-9	2'-3	3'-0	1'-5	4'-4	2	8'-0	16'-0	#9	11"	10'-6	#7	11"	13'-6	#5	11"	9'-3	17	17'-9	#5	5½"	#6	5½"	#6			#6	4	1.479	175.5
19'	9'-3	2'-3	3'-3	1'-7	4'-5	2	7'-0	16'-0	#10	14"	11'-0	#8	14"	13'-9	#6	14"	10'-3	18	18'-9	#6	7"	#6	7"	#5			#6	6	1.621	180.1
20'	9'-6	2'-3	3'-3	1'-8	4'-7	2	6'-6	16'-0	#10	13"	11'-3	#8	13"	14'-3	#6	13"	10'-9	19	19'-9	#6	6½"	#6	6½"	#5			#6	6	1.718	195.5

CASE II – LEVEL FILL WITH 2' SURCHARGE

DIMENSIONS H	W	B	C	F	E	PILE PATTERN Type	Sp 1	Sp 2	STEEL LIST s1 Size	s1 Spacing	s1 Length	s2 Size	s2 Spacing	s2 Length	s3 Size	s3 Spacing	s3 Length	h Number✦	v Length	b Size	b Spacing	t Size	t Spacing	p1 Size	p2 Size	p3 Size	f3 Size✦	f3 Number✦	QUANTITIES Concrete CY/Lin.Ft.	Reinforcing Steel Lbs./Lin.Ft.
4'	4'-0	2'-3	1'-6	1'-0	1-6	1	8'-0		#5	12"	5'-6							3	3'-9	#5	12"	#5	12"				#6		.469	36.9
5'	4'-6	2'-3	1'-6	1'-0	2'-0	1	8'-0		#5	12"	6'-6							4	4'-9	#5	12"	#5	12"	#6*			#6		.545	44.6
6'	4'-9	2'-3	1'-9	1'-0	2'-0	1	8'-0		#5	12"	7'-6							5	5'-9	#5	12"	#5	12"	#6*			#6		.600	47.3
7'	5'-0	2'-3	1'-9	1'-0	2'-3	1	8'-0		#5	12"	8'-6							6	6'-9	#5	12"	#5	12"	#6*			#6		.654	50.0
8'	5'-6	2'-3	2'-0	1'-0	2'-6	1	8'-0		#5	9"	9'-6							7	7'-9	#5	12"	#5	12"	#7			#6		.730	64.2
9'	5'-9	2'-3	2'-0	1'-0	2'-9	1	8'-0		#5	14"	5'-0	#5	14"	12'-6				8	8'-9	#5	12"	#5	12"	#8			#6		.785	72.1
10'	6'-3	2'-3	2'-3	1'-0	3'-0	1	8'-0		#5	11"	5'-6	#5	11"	13'-6				9	9'-9	#5	12"	#5	12"	#8			#6	2	.860	81.5
11'	6'-6	2'-3	2'-3	1'-0	3'-3	1	7'-0		#7	12"	7'-0	#5	12"	14'-6				10	10'-9	#5	12"	#5	12"	#8			#6	2	.915	91.3
12'	7'-3	2'-3	2'-6	1'-1	3'-8	1	6'-6		#8	14"	7'-3	#6	14"	15'-6				11	11'-9	#5	7"	#6	14"	#8			#6	2	1.030	108.0
13'	7'-6	2'-3	2'-6	1'-2	3'-10	1	5'-6		#8	12"	7'-9	#6	12"	16'-6				12	12'-9	#5	6"	#5	8"	#8			#6	4	1.107	124.6
14'	8'-0	2'-3	2'-9	1'-3	4'-0	2	8'-0	16'-0	#8	13"	8'-0	#7	13"	11'-9	#5	13"	7'-0	13	13'-9	#6	13"	#5	6½"	#6			#6	4	1.207	119.1
15'	8'-6	2'-3	3'-0	1'-4	4'-2	2	8'-0	16'-0	#8	11"	8'-0	#7	11"	12'-0	#5	11"	7'-9	14	14'-9	#6	11"	#5	5½"	#6			#6	4	1.310	136.9
16'	8'-9	2'-3	3'-0	1'-5	4'-4	2	8'-0	16'-0	#9	12"	10'-6	#7	12"	13'-3	#5	12"	7'-6	15	15'-9	#6	9"	#6	6"	#6			#6	4	1.396	159.8
17'	9'-0	2'-3	3'-0	1'-6	4'-6	2	7'-3	16'-0	#9	11"	11'-0	#7	11"	14'-0	#5	11"	7'-9	16	16'-9	#7	11"	#6	5½"	#5			#6	4	1.485	173.8
18'	9'-3	2'-3	3'-3	1'-8	4'-4	2	6'-3	16'-0	#9	12"	11'-0	#8	12"	13'-9	#6	12"	9'-3	17	17'-9	#7	9"	#7	9"	#5			#6	6	1.604	184.4
19'	9'-9	2'-3	3'-4	1'-9	4'-8	2	5'-9	16'-0	#10	12"	12'-0	#8	12"	14'-9	#6	12"	9'-3	18	18'-9	#7	8"	#7	8"	#5			#6	6	1.721	211.4
20'	10'-0	2'-3	3'-6	1'-10	4'-8	2	5'-3	16'-0	#10	11"	12'-3	#8	11"	15'-3	#6	11"	9'-9	19	19'-9	#7	5½"	#6	5½"	#5			#6	6	1.821	242.3

CASE III – 2:1 SLOPING FILL

DIMENSIONS H	W	B	C	F	E	PILE PATTERN Type	Sp 1	Sp 2	STEEL LIST s1 Size	s1 Spacing	s1 Length	s2 Size	s2 Spacing	s2 Length	s3 Size	s3 Spacing	s3 Length	h Number✦	v Length	b Size	b Spacing	t Size	t Spacing	p1 Size	p2 Size	p3 Size	f3 Size✦	f3 Number✦	QUANTITIES Concrete CY/Lin.Ft.	Reinforcing Steel Lbs./Lin.Ft.
4'	4'-0	2'-3	1'-3	1'-0	1'-9	1	8'-0		#5	12"	5'-6							3	3'-9	#5	12"	#5	12"				#6		.469	36.9
5'	4'-3	2'-3	1'-6	1'-0	1'-9	1	8'-0		#5	12"	6'-6							4	4'-9	#5	12"	#5	12"	#6*			#6		.524	44.1
6'	4'-6	2'-3	1'-6	1'-0	2'-0	1	8'-0		#5	12"	7'-6							5	5'-9	#5	12"	#5	12"	#6*			#6		.579	46.8
7'	4'-9	2'-3	1'-9	1'-0	2'-0	1	8'-0		#5	12"	8'-6							6	6'-9	#5	12"	#5	12"	#6*			#6		.634	49.5
8'	5'-0	2'-3	1'-9	1'-0	2'-3	1	8'-0		#5	12"	9'-6							7	7'-9	#5	12"	#5	12"	#7			#6		.688	53.8
9'	5'-6	2'-3	2'-0	1'-0	2'-6	1	8'-0		#5	9"	10'-6							8	8'-9	#5	12"	#5	12"	#8			#6		.764	70.5
10'	5'-9	2'-3	2'-0	1'-0	2'-9	1	7'-0		#5	14"	5'-6	#5	14"	13'-6				9	9'-9	#5	12"	#5	12"	#8			#6		.819	74.8
11'	6'-0	2'-3	2'-0	1'-0	3'-0	1	6'-0		#6	12"	6'-0	#5	12"	14'-6				10	10'-9	#5	12"	#5	12"	#8			#6		.874	84.0
12'	6'-6	2'-3	2'-3	1'-0	3'-3	2	8'-0	16'-0	#7	11"	6'-6	#5	11"	15'-6				11	11'-9	#5	11"	#5	11"	#6			#7	2	.949	91.1
13'	6'-9	2'-3	2'-3	1'-1	3'-5	2	8'-0	16'-0	#8	14"	7'-6	#6	14"	16'-6				12	12'-9	#6	14"	#5	7"	#6			#7	2	1.024	104.0
14'	7'-0	2'-3	2'-6	1'-2	3'-4	2	8'-0	16'-0	#8	12"	7'-9	#6	12"	17'-6				13	13'-9	#6	12"	#6	12"	#6			#7	2	1.102	114.0
15'	7'-3	2'-3	2'-6	1'-3	3'-6	2	7'-6	16'-0	#8	12"	8'-0	#7	12"	11'-6	#5	12"	8'-3	14	14'-9	#6	12"	#6	9"	#6			#6	2	1.183	122.5
16'	7'-6	2'-3	2'-6	1'-5	3'-7	2	6'-9	16'-0	#8	11"	8'-3	#7	11"	12'-0	#5	11"	8'-9	15	15'-9	#6	11"	#7	11"	#6			#6	4	1.292	135.7
17'	8'-0	2'-3	2'-9	1'-6	3'-9	2	6'-0	16'-0	#9	13"	9'-9	#8	13"	12'-9	#6	13"	9'-3	16	16'-9	#6	8"	#6	8"	#6			#6	4	1.401	157.6
18'	9'-0	2'-3	3'-0	1'-7	4'-5	3	7'-6	16'-0	#10	13"	10'-9	#8	13"	13'-3	#6	13"	9'-9	17	17'-9	#6	8"	#7	8"	#6	#5	#6	4	1.556	186.2
19'	9'-3	2'-3	3'-3	1'-9	4'-3	3	7'-0	16'-0	#10	12"	11'-3	#8	12"	13'-9	#6	12"	10'-3	18	18'-9	#6	6"	#7	8"	#6	#5	#5	6	1.680	205.5
20'	9'-6	2'-3	3'-3	1'-10	4'-5	3	6'-0	16'-0	#10	11"	11'-9	#8	11"	14'-3	#6	11"	10'-9	19	19'-9	#6	5½"	#7	5½"	#6	#5	#5	6	1.779	236.9

✱ Top p1 bars Omitted

CASE IV – 1½:1 SLOPING FILL

DIMENSIONS H	W	B	C	F	E	PILE PATTERN Type	Sp 1	Sp 2	STEEL LIST s1 Size	s1 Spacing	s1 Length	s2 Size	s2 Spacing	s2 Length	s3 Size	s3 Spacing	s3 Length	h Number✦	v Length	b Size	b Spacing	t Size	t Spacing	p1 Size	p2 Size	p3 Size	f3 Size✦	f3 Number✦	QUANTITIES Concrete CY/Lin.Ft.	Reinforcing Steel Lbs./Lin.Ft.
4'	4'-0	2'-3	1'-3	1'-0	1'-6	1	8'-0		#5	12"	5'-6							3	3'-9	#5	12"	#5	12"			✦7			.469	40.2
5'	4'-6	2'-3	1'-6	1'-0	2'-0	1	8'-0		#5	12"	6'-6							4	4'-9	#5	12"	#5	12"	#6*			#7		.545	47.9
6'	5'-0	2'-3	1'-9	1'-0	2'-3	1	8'-0		#5	12"	7'-6							5	5'-9	#5	12"	#5	12"	✦7*			#7		.620	52.7
7'	5'-6	2'-3	2'-0	1'-0	2'-6	1	7'-6		#5	11"	8'-6							6	6'-9	#5	12"	#5	12"	✦8			✦7		.696	66.8
8'	6'-0	2'-3	2'-0	1'-0	3'-0	1	6'-0		#6	10"	9'-6							7	7'-9	#5	12"	#5	12"	✦8			✦7		.772	76.9
9'	6'-3	2'-3	2'-3	1'-0	3'-0	2	8'-0	16'-0	#6	11"	5'-6	#5	11"	12'-6				8	8'-9	#5	11"	#5	11"	✦6			#7	2	.826	78.3
10'	6'-6	2'-3	2'-3	1'-0	3'-3	2	7'-6	16'-0	#7	11"	6'-6	#5	11"	13'-6				9	9'-9	#5	11"	#6	11"	✦6			#7	2	.881	89.6
11'	6'-9	2'-3	2'-3	1'-1	3'-5	2	6'-0	16'-0	#8	12"	6'-9	#6	12"	14'-6				10	10'-9	#5	12"	#6	9"	#5			#7	2	.953	100.3
12'	7'-6	2'-3	2'-6	1'-3	3'-9	2	5'-0	16'-0	#8	12"	6'-6	#7	12"	10'-0	#5	12"	6'-9	11	11'-9	#6	12"	✦6	8"	#5			✦7	4	1.088	115.0
13'	8'-3	2'-3	2'-9	1'-4	4'-2	2	4'-6	16'-0	#9	12"	9'-0	#7	12"	11'-0	#5	12"	6'-9	12	12'-9	#6	9"	✦6	6"	#5			#8	4	1.209	147.7
14'	8'-6	2'-3	2'-9	1'-6	4'-3	2	3'-6	16'-0	#9	11"	9'-6	#7	11"	11'-6	#5	11"	7'-3	13	13'-9	✦5	5½"	✦6	5½"	#5			✦8	4	1.313	163.4
15'	9'-0	2'-3	3'-0	1'-8	4'-4	3	5'-0	16'-0	#9	12"	9'-9	#8	12"	11'-9	#6	12"	8'-3	14	14'-9	#7	9"	✦8	9"	#5	#5	#6	4	1.445	176.4
16'	9'-6	2'-3	3'-3	1'-9	4'-6	3	4'-3	16'-0	#10	12"	10'-9	#8	12"	12'-9	#6	12"	8'-3	15	15'-9	✦6	6"	#7	6"	#5	#5	#6	6	1.557	205.0
17'	10'-0	2'-3	3'-6	1'-11	4'-7	3	4'-0	16'-0	#10	11"	11'-0	#8	11"	13'-3	#6	11"	8'-9	16	16'-9	✦6	5½"	✦7	5½"	#5	#5	#6	6	1.699	227.7
18'	10'-6	2'-4	3'-6	2'-1	4'-11	3	3'-3	16'-0	#10	10"	11'-3	#8	10"	13'-9	#6	10"	9'-3	17	17'-9	✦6	5"	✦7	5"	#5	#5	✦6	6	1.880	254.7
19'	10'-9	2'-6	3'-9	2'-3	4'-9	3	3'-0	15'-0	✦11	10"	12'-0	✦8	10"	15'-0	✦6	10"	9'-3	18	18'-9	✦7	5"	✦7	5"	✦5	✦5	✦5	8	2.080	292.3
20'	11'-6	2'-6	4'-0	2'-5	5'-1	3	3'-0	9'-0	✦11	10"	12'-6	✦9	10"	16'-0	✦6	10"	9'-3	19	19'-9	✦7	5"	✦9	7½"	✦5	✦5	✦5	8	2.269	327.8

✦ Total number of bars in the cross-section

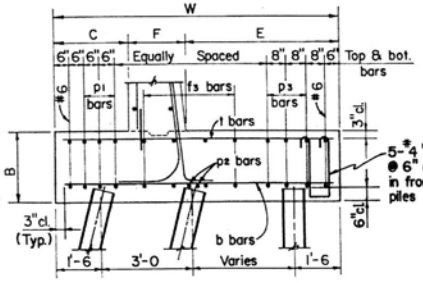

FOOTING STEEL DETAIL

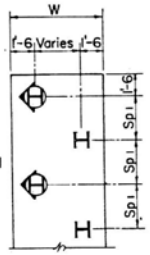

TYPE 1

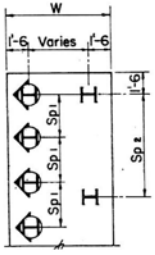

TYPE 2

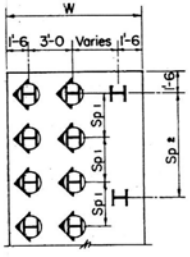

TYPE 3

H Vertical Pile

Battered Pile

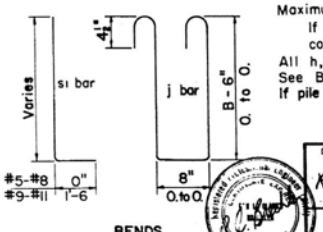

BENDS

NOTES:

All Piles shall be HP10x42 and Material shall conform to ASTM A36. Piling shall be driven to a minimum bearing of 55 tons.

Maximum shear resistance of each pile is assumed to be 20 kips. If the soil immediately below the pile cap is unstable or poorly consolidated, The pile pattern shall be checked

All h, v, and f3 bars shall be #4 spaced as shown.

See B-18.10 for General Notes and all other Details.

If pile splice is required, see B-19.10 for Details.

DESIGN APPROVED R.C. Brechle

APPROVED FOR DISTRIBUTION

ARIZONA DEPARTMENT OF TRANSPORTATION HIGHWAYS DIVISION STANDARD DRAWINGS

CANTILEVER RETAINING WALLS ON STEEL PILES

REVISION

STANDARD NO. B-18.30

CASE I – LEVEL FILL

DIMENSIONS						PILE PATTERN			STEEL LIST																	QUANTITIES	
									s1			s2			s3			h	v	b		t		p1	p2	p3	f3		
H	W	B	C	F	E	Type	Sp 1	Sp 2	Size	Spacing	Length	Size	Spacing	Length	Size	Spacing	Length	Number✦	Length	Size	Spacing	Size	Spacing	Size	Size	Size	Number✦	Concrete CY./Lin.Ft.	Reinforcing Steel Lbs./Lin.Ft.
4'	4'-0	2'-0	1'-3	1'-0	1'-9	1	8'-0		#5	12"	5'-6							3	3'-9	#5	12"	#5	12"			#6		.432	34.7
5'	4'-3	2'-0	1'-6	1'-0	1'-9	1	8'-0		#5	12"	6'-6							4	4'-9	#5	12"	#5	12"	#6*		#6		.485	41.9
6'	4'-6	2'-0	1'-6	1'-0	2'-0	1	8'-0		#5	12"	7'-6							5	5'-9	#5	12"	#5	12"	#6*		#6		.537	44.6
7'	4'-9	2'-0	1'-9	1'-0	2'-0	1	8'-0		#5	12"	8'-6							6	6'-9	#5	12"	#5	12"	#6*		#6		.590	47.3
8'	5'-0	2'-0	1'-9	1'-0	2'-3	1	8'-0		#5	12"	9'-6							7	7'-9	#5	12"	#5	12"	#6*		#6		.642	50.0
9'	5'-6	2'-0	2'-0	1'-0	2'-6	1	8'-0		#5	12"	10'-6							8	8'-9	#5	12"	#5	12"	#7		#6		.713	60.9
10'	5'-9	2'-0	2'-0	1'-0	2'-9	1	8'-0		#6	12"	11'-6							9	9'-9	#5	12"	#5	12"	#7		#6		.765	68.9
11'	6'-0	2'-0	2'-0	1'-0	3'-0	1	7'-0		#5	13"	5'-6	#5	13"	14'-6				10	10'-9	#5	13"	#5	13"	#7		#6	2	.818	72.9
12'	6'-6	2'-0	2'-3	1'-0	3'-3	1	6'-6		#6	12"	6'-6	#5	12"	15'-6				11	11'-9	#5	12"	#5	12"	#7		#6	2	.890	82.7
13'	6'-9	2'-0	2'-3	1'-0	3'-6	1	5'-6		#7	11"	7'-3	#5	11"	16'-6				12	12'-9	#6	11"	#6	11"	#6		#6	2	.941	97.5
14'	7'-0	2'-0	2'-6	1'-1	3'-5	1	5'-3		#8	14"	7'-9	#6	14"	17'-6				13	13'-9	#5	7"	#6	14"	#6		#6	2	1.015	103.4
15'	7'-3	2'-0	2'-6	1'-2	3'-7	2	8'-0	16'-0	#8	12"	7'-9	#6	12"	18'-6				14	14'-9	#5	12"	#6	12"	#5		#6	2	1.093	107.2
16'	7'-6	2'-0	2'-6	1'-3	3'-9	2	8'-0	16'-0	#8	12"	7'-9	#7	12"	12'-0	#5	12"	8'-9	15	15'-9	#5	9"	#6	9"	#5		#6	4	1.173	122.1
17'	8'-0	2'-0	2'-9	1'-4	3'-11	2	6'-9	16'-0	#8	11"	8'-0	#7	11"	12'-6	#5	11"	9'-3	16	16'-9	#6	11"	#7	11"	#5		#6	4	1.275	135.8
18'	8'-9	2'-0	3'-0	1'-5	4'-4	2	6'-0	16'-0	#9	11"	10'-6	#7	11"	13'-6	#5	11"	9'-3	17	17'-9	#5	5½"	#6	5½"	#5		#6	4	1.398	171.8
19'	9'-3	2'-0	3'-0	1'-7	4'-8	2	5'-3	16'-0	#10	14"	11'-0	#8	14"	13'-9	#6	14"	10'-3	18	18'-9	#6	7"	#7	7"	#5		#6	6	1.536	187.1
20'	9'-6	2'-0	3'-0	1'-8	4'-10	2	4'-9	16'-0	#10	13"	11'-3	#8	13"	14'-3	#6	13"	10'-9	19	19'-9	#6	6½"	#7	6½"	#5		#6	6	1.630	203.4

CASE II – LEVEL FILL WITH 2' SURCHARGE

DIMENSIONS						PILE PATTERN			STEEL LIST																	QUANTITIES	
									s1			s2			s3			h	v	b		t		p1	p2	p3	f3		
H	W	B	C	F	E	Type	Sp 1	Sp 2	Size	Spacing	Length	Size	Spacing	Length	Size	Spacing	Length	Number✦	Length	Size	Spacing	Size	Spacing	Size	Size	Size	Number✦	Concrete CY./Lin.Ft.	Reinforcing Steel Lbs./Lin.Ft.
4'	4'-0	2'-0	1'-6	1'-0	1-6	1	8'-0		#5	12"	5'-6							3	3'-9	#5	12"	#5	12"			#6		.432	34.7
5'	4'-6	2'-0	1'-6	1'-0	2'-0	1	8'-0		#5	12"	6'-6							4	4'-9	#5	12"	#5	12"	#6*		#6		.503	42.4
6'	4'-9	2'-0	1'-9	1'-0	2'-0	1	8'-0		#5	12"	7'-6							5	5'-9	#5	12"	#5	12"	#6*		#6		.556	45.1
7'	5'-0	2'-0	1'-9	1'-0	2'-3	1	8'-0		#5	12"	8'-6							6	6'-9	#5	12"	#5	12"	#6*		#6		.608	47.8
8'	5'-6	2'-0	2'-0	1'-0	2'-6	1	8'-0		#5	9"	9'-6							7	7'-9	#5	12"	#5	12"	#7		#6		.679	62.1
9'	5'-9	2'-0	2'-0	1'-0	2'-9	1	7'-6		#5	14"	5'-0	#5	14"	12'-6				8	8'-9	#5	12"	#5	12"	#7		#6		.732	66.1
10'	6'-3	2'-0	2'-3	1'-0	3'-0	1	7'-0		#5	11"	5'-6	#5	11"	13'-6				9	9'-9	#5	11"	#5	11"	#7		#6	2	.803	76.7
11'	6'-6	2'-0	2'-3	1'-0	3'-3	1	6'-0		#7	12"	7'-0	#5	12"	14'-6				10	10'-9	#5	9"	#5	9"	#7		#6	2	.855	89.2
12'	7'-3	2'-0	2'-6	1'-1	3'-8	1	5'-3		#8	14"	7'-3	#6	14"	15'-6				11	11'-9	#5	7"	#5	7"	#6		#6	2	.963	101.6
13'	7'-6	2'-0	2'-6	1'-2	3'-10	1	4'-6		#8	12"	7'-9	#6	12"	16'-6				12	12'-9	#5	6"	#6	9"	#6		#6	4	1.037	117.5
14'	8'-0	2'-0	2'-9	1'-3	4'-0	2	8'-0	16'-0	#8	13"	8'-0	#7	13"	11'-9	#5	13"	7'-0	13	13'-9	#6	13"	#6	6½"	#5		#6	4	1.133	121.6
15'	8'-6	2'-0	2'-9	1'-4	4'-5	2	7'-0	16'-0	#8	11"	8'-0	#7	11"	12'-0	#5	11"	7'-9	14	14'-9	#6	11"	#6	5½"	#5		#6	4	1.232	141.1
16'	8'-9	2'-0	3'-0	1'-5	4'-4	2	6'-0	16'-0	#9	12"	10'-6	#7	12"	13'-3	#5	12"	7'-6	15	15'-9	#6	9"	#7	9"	#5		#6	4	1.315	153.6
17'	9'-0	2'-0	3'-0	1'-6	4'-6	2	5'-6	16'-0	#9	11"	11'-0	#7	11"	14'-0	#5	11"	7'-9	16	16'-9	#7	11"	#8	11"	#5		#6	4	1.401	169.6
18'	9'-3	2'-0	3'-3	1'-8	4'-4	2	5'-0	16'-0	#9	12"	11'-0	#8	12"	13'-9	#6	12"	9'-3	17	17'-9	#7	8"	#7	8"	#5		#6	6	1.519	189.2
19'	9'-6	2'-0	3'-3	1'-9	4'-6	2	4'-6	16'-0	#10	12"	12'-0	#8	12"	14'-9	#6	12"	9'-3	18	18'-9	#7	8"	#8	9"	#5		#6	6	1.613	212.5
20'	10'-0	2'-0	3'-6	1'-10	4'-8	2	4'-3	16'-0	#10	11"	12'-3	#8	11"	15'-3	#6	11"	9'-9	19	19'-9	#7	5½"	#7	5½"	#5		#6	6	1.728	252.4

CASE III – 2:1 SLOPING FILL

DIMENSIONS						PILE PATTERN			STEEL LIST																	QUANTITIES	
									s1			s2			s3			h	v	b		t		p1	p2	p3	f3		
H	W	B	C	F	E	Type	Sp 1	Sp 2	Size	Spacing	Length	Size	Spacing	Length	Size	Spacing	Length	Number✦	Length	Size	Spacing	Size	Spacing	Size	Size	Size	Number✦	Concrete CY./Lin.Ft.	Reinforcing Steel Lbs./Lin.Ft.
4'	4'-0	2'-0	1'-3	1'-0	1'-9	1	8'-0		#5	12"	5'-6							3	3'-9	#5	12"	#5	12"			#6		.432	34.7
5'	4'-3	2'-0	1'-6	1'-0	1'-9	1	8'-0		#5	12"	6'-6							4	4'-9	#5	12"	#5	12"	#6*		#6		.485	41.9
6'	4'-6	2'-0	1'-6	1'-0	2'-0	1	8'-0		#5	12"	7'-6							5	5'-9	#5	12"	#5	12"	#6*		#6		.537	44.6
7'	4'-9	2'-0	1'-9	1'-0	2'-0	1	8'-0		#5	12"	8'-6							6	6'-9	#5	12"	#5	12"	#6*		#6		.590	47.3
8'	5'-0	2'-0	1'-9	1'-0	2'-3	1	8'-0		#5	12"	9'-6							7	7'-9	#5	12"	#5	12"	#7		#6		.642	51.6
9'	5'-6	2'-0	2'-0	1'-0	2'-6	1	7'-6		#5	9"	10'-6							8	8'-9	#5	12"	#5	12"	#7		#6		.713	64.6
10'	5'-9	2'-0	2'-0	1'-0	2'-9	1	6'-0		#5	14"	5'-6	#5	14"	13'-6				9	9'-9	#5	12"	#5	12"	#7		#6		.765	68.6
11'	6'-0	2'-0	2'-0	1'-0	3'-0	1	5'-0		#6	12"	6'-0	#5	12"	14'-6				10	10'-9	#5	12"	#5	12"	#6*		#6		.818	74.1
12'	6'-6	2'-0	2'-3	1'-0	3'-3	2	8'-0	16'-0	#7	11"	6'-6	#5	11"	15'-6				11	11'-9	#5	11"	#6	11"	#6		#7	2	.890	93.0
13'	6'-9	2'-0	2'-3	1'-1	3'-5	2	8'-0	16'-0	#8	14"	7'-6	#6	14"	16'-6				12	12'-9	#6	14"	#5	7"	#6		#7	2	.961	102.9
14'	7'-0	2'-0	2'-6	1'-2	3'-4	2	7'-6	16'-0	#8	12"	7'-9	#6	12"	17'-6				13	13'-9	#6	12"	#5	6"	#6		#7	2	1.037	116.7
15'	7'-3	2'-0	2'-6	1'-3	3'-6	2	6'-3	16'-0	#8	12"	8'-0	#7	12"	11'-6	#5	12"	8'-3	14	14'-9	#6	12"	#5	6"	#5		#6	2	1.116	119.2
16'	7'-6	2'-0	2'-6	1'-5	3'-7	2	5'-3	16'-0	#8	11"	8'-3	#7	11"	12'-0	#5	11"	8'-9	15	15'-9	#6	11"	#7	11"	#5		#6	4	1.222	131.8
17'	8'-0	2'-0	2'-9	1'-6	3'-9	2	4'-6	16'-0	#9	13"	9'-9	#8	13"	12'-9	#6	13"	9'-3	16	16'-9	#7	10"	#7	10"	#5		#6	4	1.327	156.7
18'	9'-0	2'-0	3'-0	1'-7	4'-5	3	6'-0	16'-0	#10	13"	10'-9	#8	13"	13'-3	#6	13"	9'-9	17	17'-9	#6	6½"	#7	6½"	#5	#5	#6	4	1.472	192.8
19'	9'-3	2'-0	3'-3	1'-9	4'-3	3	6'-0	16'-0	#10	12"	11'-3	#8	12"	13'-9	#6	12"	10'-3	18	18'-9	#6	6"	#7	6"	#5	#5	#6	6	1.594	213.3
20'	10'-0	2'-0	3'-6	1'-10	4'-8	3	5'-9	16'-0	#10	11"	11'-9	#8	11"	14'-3	#6	11"	10'-9	19	19'-9	#6	5½"	#7	5½"	#5	#5	#6	6	1.728	239.6

* Top p1 bars Omitted

CASE IV – 1½:1 SLOPING FILL

DIMENSIONS						PILE PATTERN			STEEL LIST																	QUANTITIES	
									s1			s2			s3			h	v	b		t		p1	p2	p3	f3		
H	W	B	C	F	E	Type	Sp 1	Sp 2	Size	Spacing	Length	Size	Spacing	Length	Size	Spacing	Length	Number✦	Length	Size	Spacing	Size	Spacing	Size	Size	Size	Number✦	Concrete CY./Lin.Ft.	Reinforcing Steel Lbs./Lin.Ft.
4'	4'-0	2'-0	1'-6	1'-0	1'-6	1	8'-0		#5	12"	5'-6							3	3'-9	#5	12"	#5	12"			#6		.432	34.7
5'	4'-6	2'-0	1'-6	1'-0	2'-0	1	8'-0		#5	12"	6'-6							4	4'-9	#5	12"	#5	12"	#6*		#7		.503	45.7
6'	5'-0	2'-0	1'-9	1'-0	2'-3	1	8'-0		#5	12"	7'-6							5	5'-9	#5	12"	#5	12"	#6*		#7		.574	48.9
7'	5'-6	2'-0	2'-0	1'-0	2'-6	1	6'-0		#5	11"	8'-6							6	6'-9	#5	12"	#5	12"	#6		#6		.645	54.2
8'	6'-0	2'-0	2'-0	1'-0	3'-0	1	4'-9		#6	10"	9'-6							7	7'-9	#5	12"	#5	12"	#6		#6		.716	63.8
9'	6'-3	2'-0	2'-0	1'-0	3'-3	2	7'-0	16'-0	#6	11"	5'-6	#5	11"	12'-6				8	8'-9	#5	11"	#5	11"	#5		#7	2	.769	74.4
10'	6'-6	2'-0	2'-3	1'-0	3'-3	2	5'-9	16'-0	#7	11"	6'-6	#5	11"	13'-6				9	9'-9	#5	11"	#6	11"	#5		#7	2	.821	85.7
11'	7'-0	2'-0	2'-6	1'-1	3'-5	2	4'-9	16'-0	#8	12"	6'-9	#6	12"	14'-6				10	10'-9	#5	9"	#6	9"	#5		#7	2	.909	102.2
12'	7'-6	2'-0	2'-6	1'-3	3'-9	2	4'-0	16'-0	#8	12"	6'-6	#7	12"	10'-0	#5	12"	6'-9	11	11'-9	#6	9"	#7	9"	#5		#8	4	1.019	124.5
13'	8'-3	2'-0	2'-6	1'-4	4'-5	2	3'-3	16'-0	#9	12"	9'-0	#7	12"	11'-0	#5	12"	6'-9	12	12'-9	#6	9"	#8	9"	#5		#8	4	1.133	150.9
14'	8'-6	2'-0	2'-9	1'-6	4'-3	2	3'-0	6'-0	#9	11"	9'-6	#7	11"	11'-6	#5	11"	7'-3	13	13'-9	#7	9"	#8	9"	#5		#6	4	1.235	161.2
15'	9'-0	2'-0	3'-0	1'-8	4'-4	3	3'-9	16'-0	#9	12"	9'-9	#8	12"	11'-9	#6	12"	8'-3	14	14'-9	#7	9"	#7	6"	#5	#5	#6	4	1.361	179.8
16'	9'-3	2'-0	3'-3	1'-9	4'-3	3	3'-6	16'-0	#10	12"	10'-9	#8	12"	12'-9	#6	12"	8'-3	15	15'-9	#8	9"	#7	6"	#5	#5	#6	6	1.451	207.0
17'	9'-9	2'-0	3'-3	1'-11	4'-7	3	3'-0	16'-0	#10	11"	11'-0	#8	11"	13'-3	#6	11"	8'-9	16	16'-9	#8	8"	#9	8"	#5	#5	#6	6	1.588	237.3
18'	10'-3	2'-1	3'-6	2'-1	4'-8	3	3'-0	7'-0	#10	10"	11'-3	#8	10"	13'-9	#6	10"	9'-3	17	17'-9	#8	6"	#8	6"	#5	#5	#5	6	1.763	269.8

✦ Total number of bars in the cross-section.

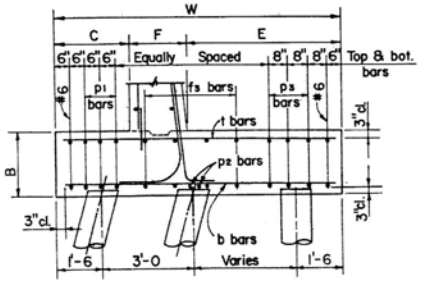

FOOTING STEEL DETAIL

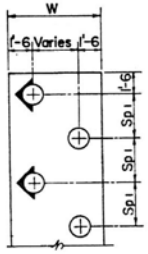

TYPE 1

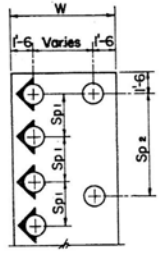

TYPE 2

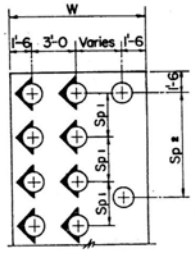

TYPE 3

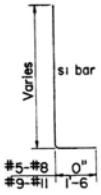

BEND

⊕ Vertical Pile

⊕ Battered Pile

NOTES:

All Piles shall be 14"✦ Cast-in-place or Precast Concrete, see B-20.10. Piling shall be driven to a minimum bearing of 45 tons.

Maximum shear resistance of each pile is assumed to be 15 kips. If the soil immediately below the pile cap is unstable or poorly consolidated, The pile pattern shall be checked.

All h, v, and f3 bars shall be #4 spaced as shown.

See B-18.10 for General Notes and all other Details.

DESIGN APPROVED	ARIZONA DEPARTMENT OF TRANSPORTATION HIGHWAYS DIVISION STANDARD DRAWINGS	REVISION
APPROVED FOR DISTRIBUTION	CANTILEVER RETAINING WALLS ON CONCRETE PILES	STANDARD N B-18.40

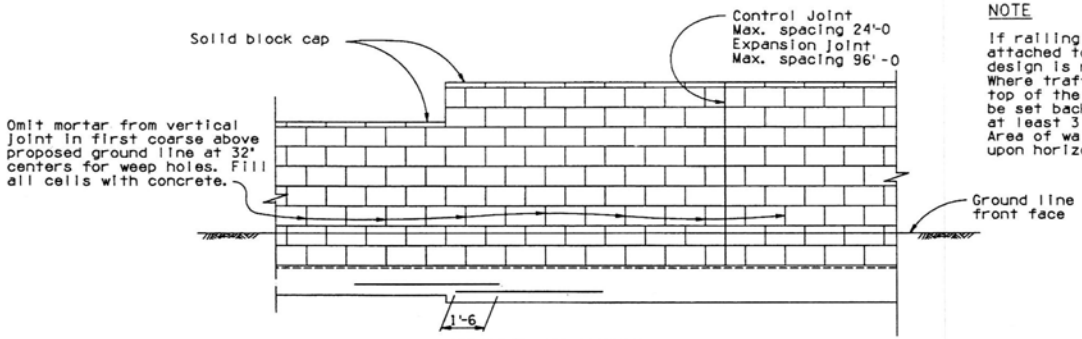

TYPICAL ELEVATION

NOTE

If railing or barrier is directly attached to the wall, a special design is required.
Where traffic is adjacent to the top of the wall, guardrail should be set back from the layout line at least 3 feet.
Area of wall for payment is based upon horizontal length and height 'H'.

GENERAL NOTES

Construction - Arizona Department of Transportation Standard Specifications for Road and Bridge Construction.

Design - AASHTO Standard Specifications for Highway Bridges, 1983 Edition, and 1984 through 1986 Interim Specifications.

Masonry block, mortar and grout as per 1985 Uniform Building Code.

Dead Load - Weight of backfill = 120 PCF
Angle of internal friction = 33°15'.

All concrete shall be Class 'S' unless noted otherwise.

Reinforcing steel shall conform to ASTM Specification A615. Bars shall be designed as Grade 40 but may be furnished as Grade 40 or Grade 60.

All bend dimensions for reinforcing steel shall be out to out of bars. All placement dimensions for reinforcing steel shall be to center of bars unless noted otherwise.

All reinforcing steel shall have 2" clear cover unless noted otherwise.

Stresses - Concrete ..... f'c = 3,000 psi
Masonry ..... f'm = 1,350 psi
Reinf. Steel ..... fs = 20,000 psi

Design requires a minimum allowable Soil Pressure of 1,500 PSF.

For wall treatment and type of block see Project Plans.

This drawing compatible with block types shown on Arizona Masonry Guild Standard #1080-80, #1090-80, #2000-80 and #2010-80.

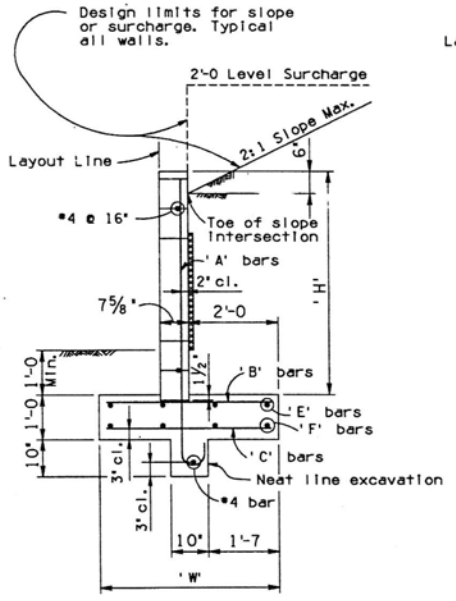

WALL TYPE A

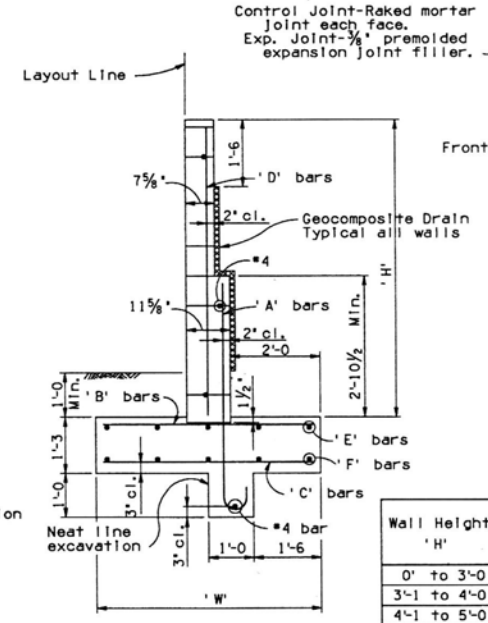

WALL TYPE B

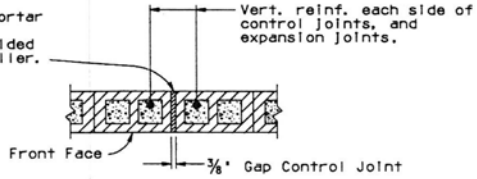

CONTROL JOINT DETAIL

Wall Height 'H'	Wall Type	Ftg. Width 'W'	Reinforcing Bars					
			A	B	C	D	E	F
0' to 3'-0	A	3'-0	#4@16"	#4@16"	—	—	3-#5	—
3'-1 to 4'-0	A	3'-6	#4@16"	#4@16"	—	—	4-#5	—
4'-1 to 5'-0	A	4'-0	#5@16"	#4@16"	#4@16"	—	4-#4	4-#4
5'-1 to 6'-0	B	4'-6	#5@16"	#4@16"	#4@16"	#4@16"	5-#4	5-#4
6'-1 to 7'-0	B	5'-0	#6@16"	#5@16"	#5@16"	#4@16"	5-#4	5-#4
7'-1 to 8'-0	B	5'-6	#6@12"	#5@12"	#5@12"	#5@12"	4-#5	4-#5

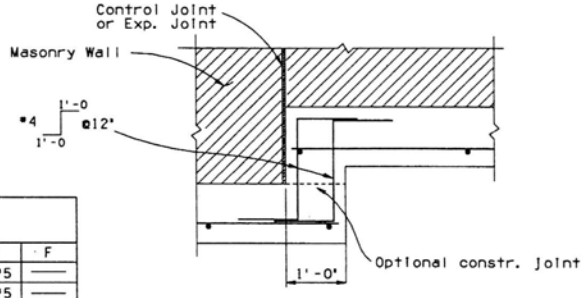

FOOTING STEP DETAIL

REDUCED SIZE DO NOT SCALE

DESIGN APPROVED	ARIZONA DEPARTMENT OF TRANSPORTATION HIGHWAYS DIVISION STANDARD DRAWINGS	REVISION
APPROVED FOR DISTRIBUTION	MASONRY RETAINING WALLS	STANDARD NO. B-18.50

CADD FILENAME= 2FA
VIEW NAME=

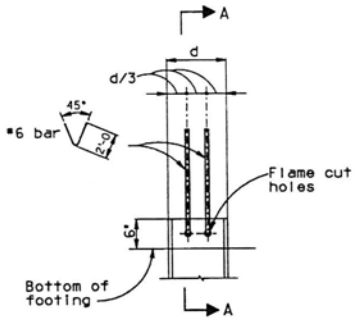

ELEVATION

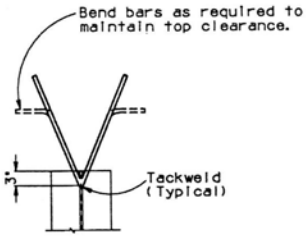

SECTION A-A

PILE ANCHOR DETAIL

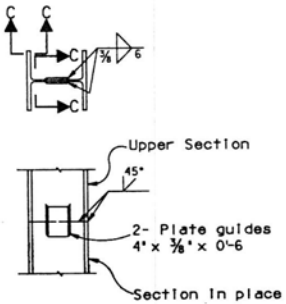

PILE SPLICE DETAIL

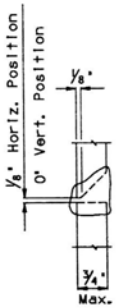

SECTION C-C

GENERAL NOTES:

Construction - Arizona Department of Transportation Standard Specifications for Road and Bridge Construction.

Structural Steel shall conform to ASTM Specification A36.

All welding shall conform to the requirements of the American Welding Society, Structural Welding Code, D1.1, 1980, revised to date, and as modified by the AASHTO Standard Specifications for Welding of Structural Steel Highway Bridges, 1981, revised to date.

Roadway Drains shall conform to ASTM Specifications A53, Type S, grade "B". Galvanize after fabrication in accordance with ASTM Specifications A123.

Reinforcing Steel shall conform to ASTM Spec. A615. Bars shall be grade 40 or Grade 60, fs= 20,000 psi.

PILE SPLICE NOTE:

When piling is to be spliced for further driving, upper section shall be lowered on section in place and tapped lightly with hammer to full bearing before butt welds are made. When piling is to be extended without further driving, omit guide plates and make butt welds continuous across web.

PILE POINT NOTE: (Only when required).

Manufactured pile points shall be attached by means of a single bevel groove weld across the full width of each exterior face of the flanges of the pile.

The flanges of the pile shall be prepared by flame cutting a 45 degree bevel at the bottom edge of each exterior face of flanges. 45 degrees bevel size shall be 1/2 the flange thickness.

Groove weld shall be 5/16" for all HP piles 8" thru 14", HP14x117 shall be 7/16".

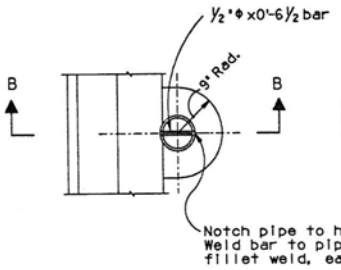

PLAN

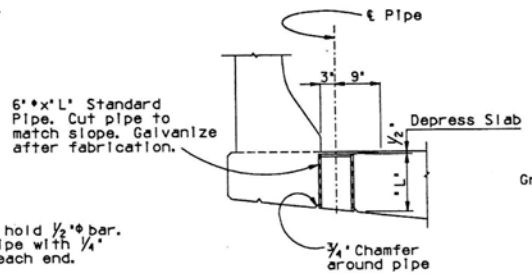

SECTION B-B

DECK DRAIN DETAIL

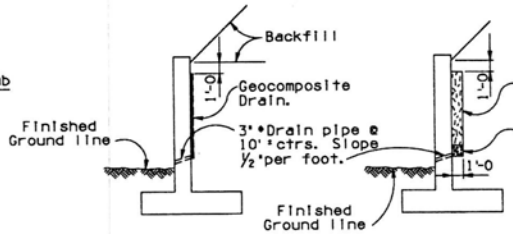

ALTERNATE A

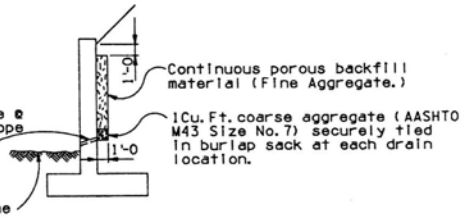

ALTERNATE B

WALL DRAINAGE

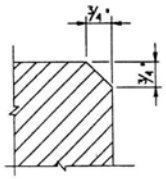

Chamfer all exposed corners thus unless otherwise noted. This note applicable to all sheets pertaining to the structure.

CHAMFER DETAIL

REDUCED SIZE DO NOT SCALE

DESIGN APPROVED	ARIZONA DEPARTMENT OF TRANSPORTATION HIGHWAYS DIVISION STANDARD DRAWINGS	REVISION 7-88
APPROVED FOR DISTRIBUTION	MISCELLANEOUS DETAILS FOR BRIDGES	STANDARD NO. B-19.10

CADD FILENAME= 2FA
VIEW NAME=

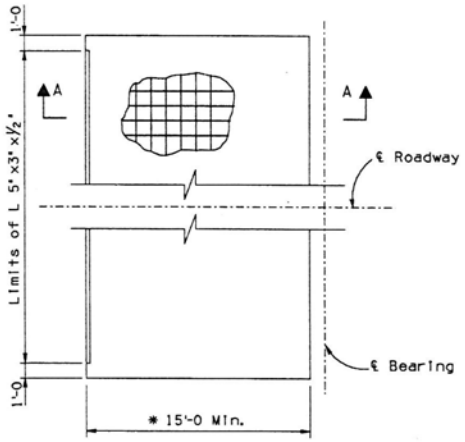

PLAN A

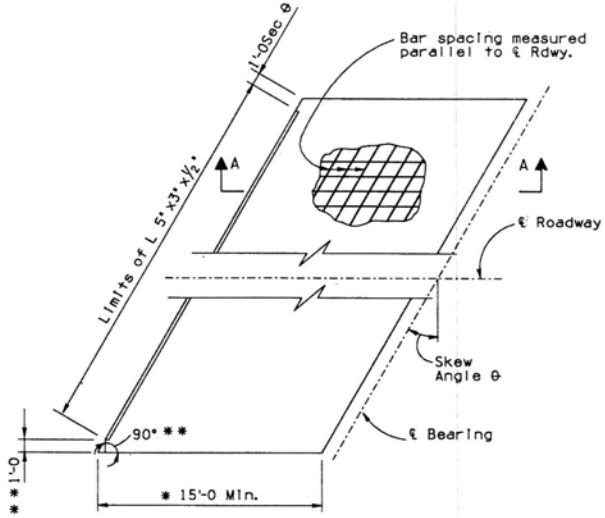

PLAN B

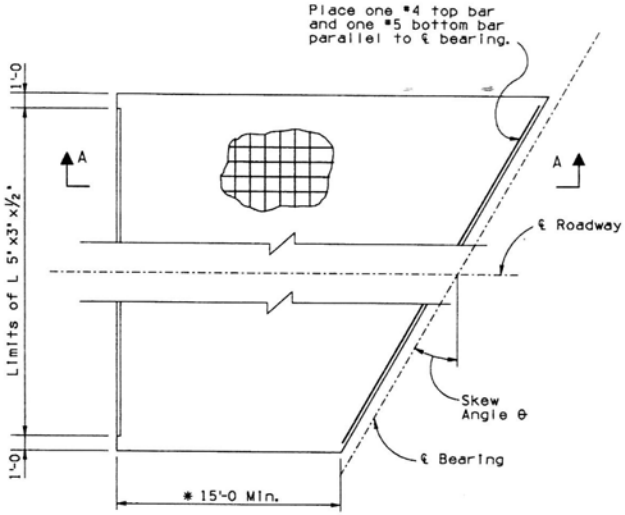

PLAN C

*Length shall be increased when necessary to eliminate surcharge load.

**For skew angle over 15°

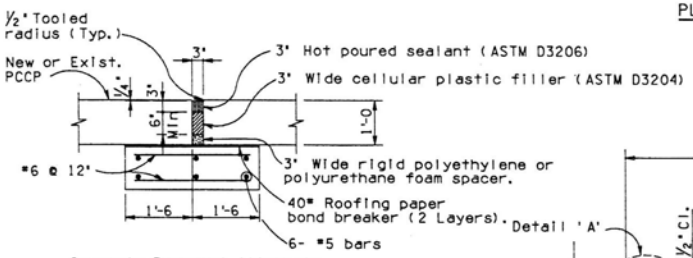

Concrete Pavement Alternate

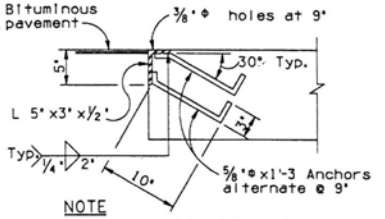

NOTE
Omit guard angle thru raised median and sidewalks.

Bituminous Pavement Alternate

DETAIL 'A'

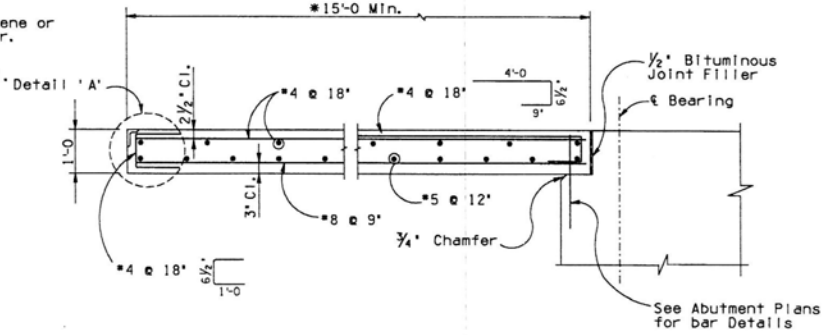

SECTION A-A

GENERAL NOTES:

Construction - Arizona Department of Transportation Standard Specifications for Road and Bridge Construction.
Design - AASHTO Standard Specification for Highway Bridges, 1983, Edition, and 1984, 1985 and 1986 Interim Specifications.
All concrete shall be Class 'S' f'c = 3000 psi.
Reinforcing steel shall conform to ASTM Specification A615. Bar sizes #6 and smaller shall be designed as Grade 40 but may be furnished as Grade 40 or Grade 60, fs= 20,000 psi. Bar size #7 and larger shall be designed and furnished as Grade 60, fs= 24,000 psi.
All bend dimensions for reinforcing steel shall be out to out of bars. All placement dimensions for reinforcing steel shall be to center of bars except as noted.
All reinforcing steel shall have 2" clear cover unless noted otherwise.
Structural steel shall conform to ASTM Specification A36.
All welding shall conform to the requirements of the American Welding Society, Structural Welding code, D1.1-80, as modified by the AASHTO Standard Specifications for Welding of Structural Steel Highway Bridges, 1981.
Paint and Painting shall conform to Standard Specifications.
Contact surfaces shall not be painted.
Dimensions shall not be scaled from drawings.

	DESIGN APPROVED	ARIZONA DEPARTMENT OF TRANSPORTATION HIGHWAYS DIVISION STANDARD DRAWINGS	REVISION
	APPROVED FOR DISTRIBUTION	APPROACH SLABS	STANDARD NO. B-19.11

CADD FILENAME= ZFA
VIEW NAME=

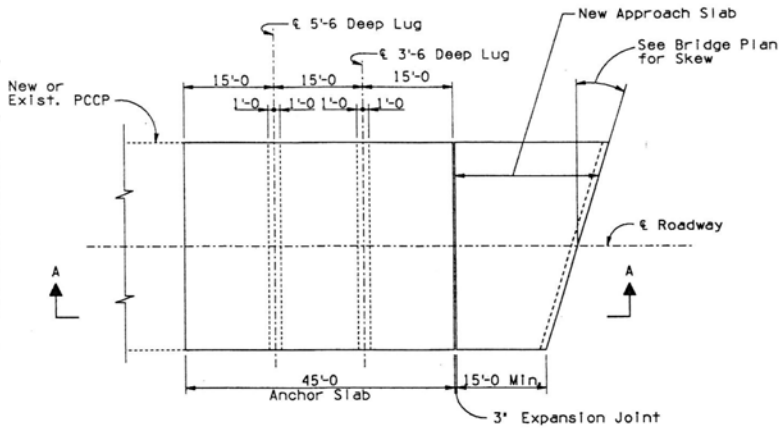

PLAN - NEW APPROACH SLAB

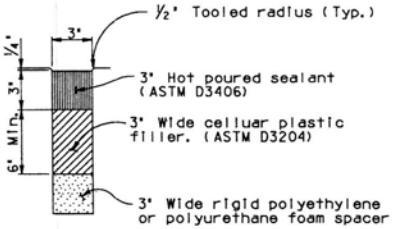

DETAIL 'A'

NOTES

All Concrete shall be Class 'S', f'c = 3,000 psi.

All Reinforcing Steel dimensions shall be to center of bars unless noted otherwise.

All Reinforcing Steel shall have 3" clear cover unless noted otherwise.

Reinforcing Steel shall conform to ASTM Spec. A615. Bar size #6 and smaller are designed as Grade 40 and furnished as Grade 40 or Grade 60, fs = 20,000 psi. Bar size #7 and larger shall be Grade 60, fs = 24,000 psi.

Anchor lug to be cast in precompacted roadway embankment or formed and compacted to embankment requirements prior to the casting of Anchor Slab.

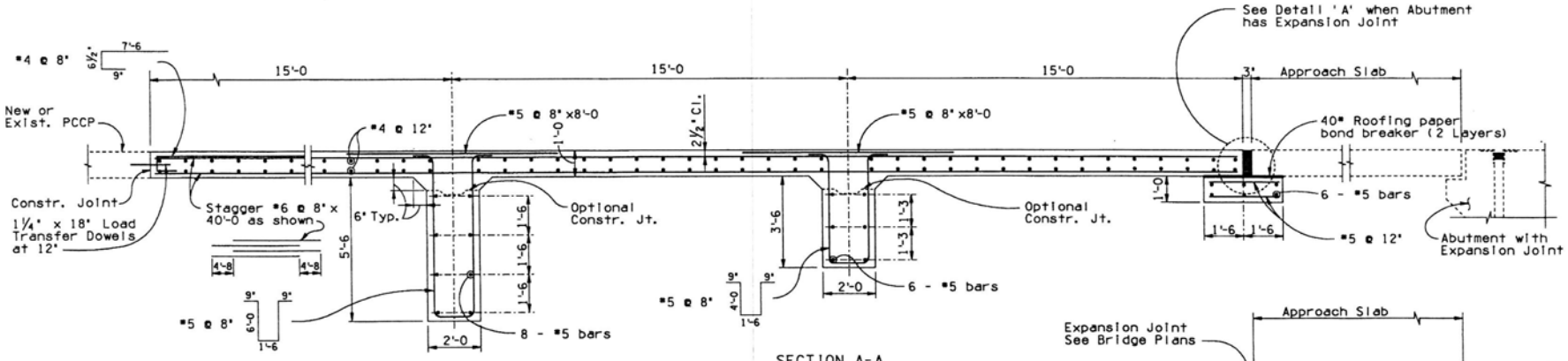

SECTION A-A

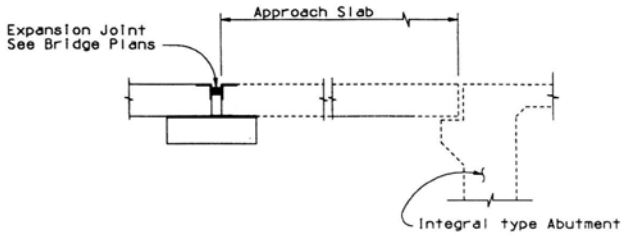

	DESIGN APPROVED	ARIZONA DEPARTMENT OF TRANSPORTATION HIGHWAYS DIVISION STANDARD DRAWINGS	REVISION
	APPROVED FOR DISTRIBUTION	ANCHOR SLAB DETAILS	STANDARD NO. B-19.12

CADD FILENAME= 2FA
VIEW NAME=

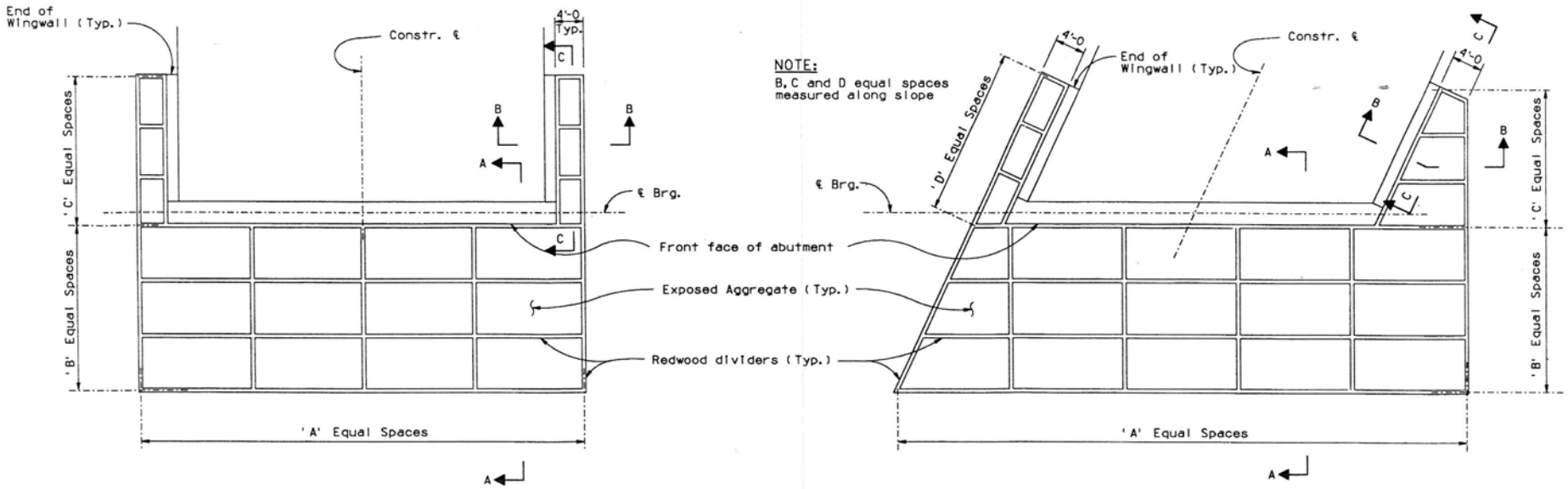

PLAN - RIGHT ANGLE BRIDGE

PLAN - SKEW BRIDGE

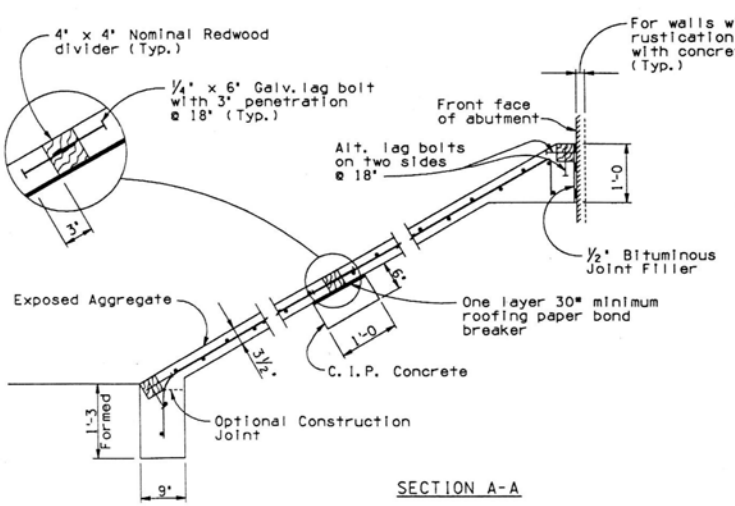

SECTION A-A

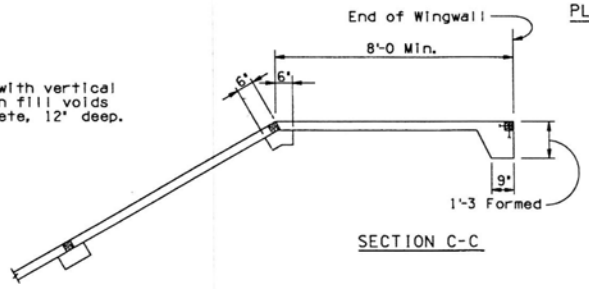

SECTION C-C

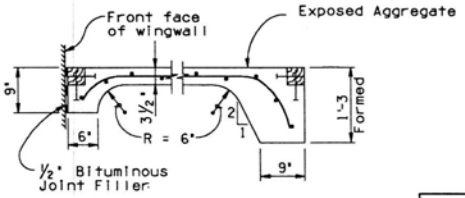

SECTION B-B

NOTES

All slopes shall be paved as shown. See Contract Plans for number of A, B, C and D Equal Spaces.
Concrete for slope paving shall be Class 'S', f'c = 3000 psi. with exposed aggregate surface. Maximum size coarse aggregate shall be 3/4 inches.
Welded wire fabric shall be 6 x 6 - W1.4 x W1.4.

DESIGN APPROVED	ARIZONA DEPARTMENT OF TRANSPORTATION HIGHWAYS DIVISION STANDARD DRAWINGS	REVISION 7-88
APPROVED FOR DISTRIBUTION	SLOPE PAVING DETAILS	STANDARD NO. B-19.20

CADD FILENAME= 2FA
VIEW NAME=

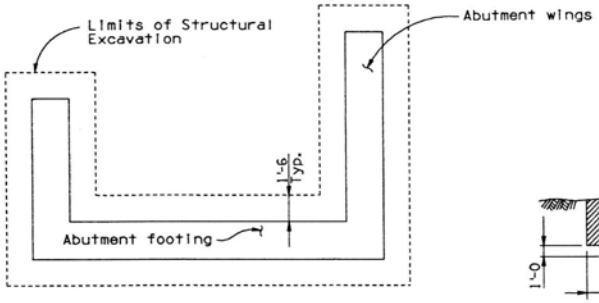

TYPICAL ABUTMENT FOOTING PLAN

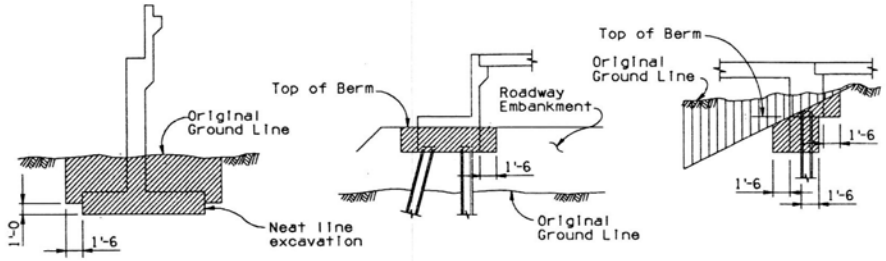

TYPICAL ABUTMENT SECTIONS

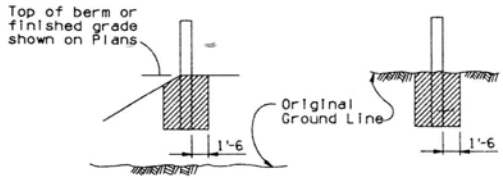

WINGWALLS

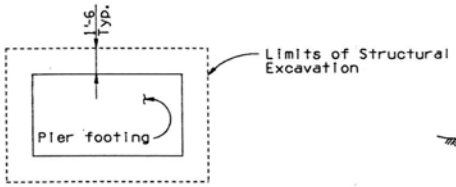

TYPICAL PIER FOOTING PLAN

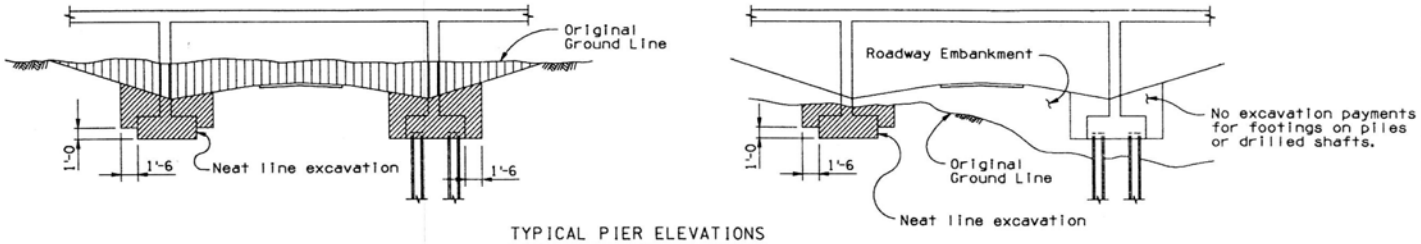

TYPICAL PIER ELEVATIONS

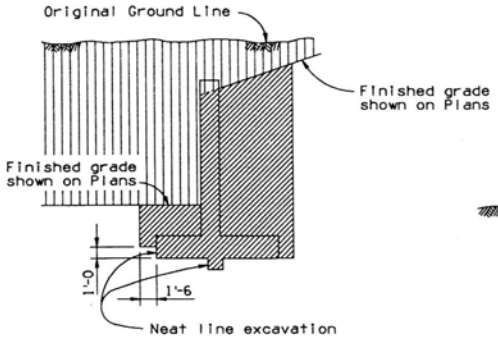

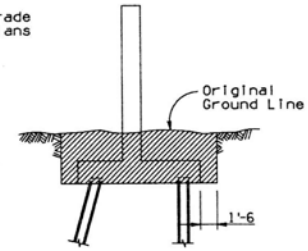

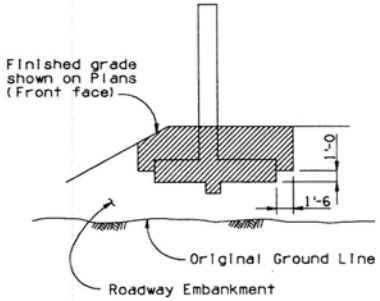

TYPICAL RETAINING WALL SECTIONS

NOTES

Indicates Structural Excavation

Indicates Roadway Excavation

For any footing on piles or drilled shafts do not use neat line excavation.

For structure foundations above original ground line, construct roadway embankment to top of berm or finished grade before strucural excavation is made.

If no roadway excavation or embankment is involved, structural excavation shall be measured from the original ground line.

'Top of berm' shall mean the top of berm or elevation at point of intersection between front face and slope.

	DESIGN APPROVED	ARIZONA DEPARTMENT OF TRANSPORTATION HIGHWAYS DIVISION STANDARD DRAWINGS	REVISION
	APPROVED FOR DISTRIBUTION	STRUCTURAL EXCAVATION PAYMENT LIMITS	STANDARD NO. B-19.30

CADD FILENAME= ZFA
VIEW NAME=

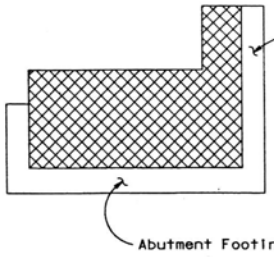

TYPICAL ABUTMENT FOOTING PLAN

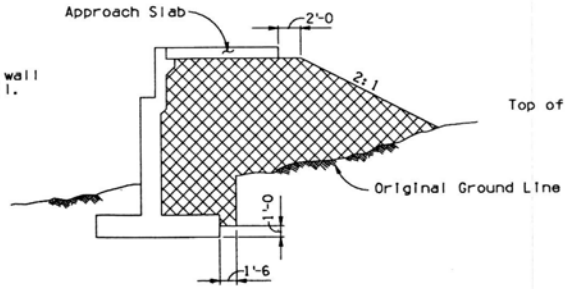

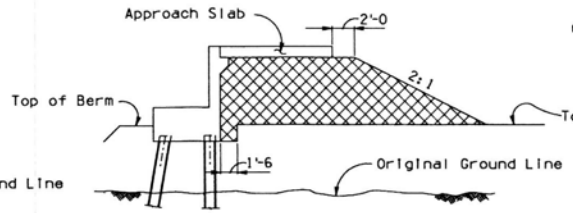

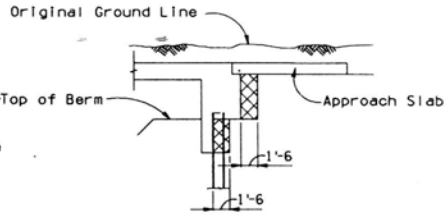

TYPICAL ABUTMENT SECTIONS WITH APPROACH SLABS

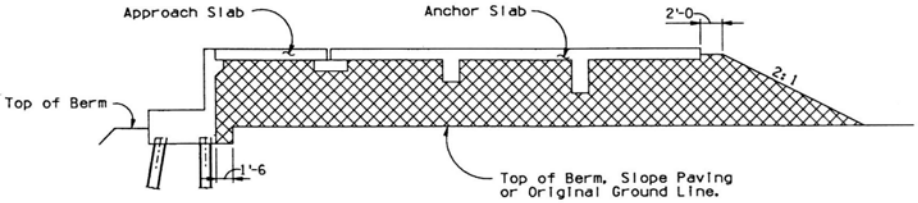

TYPICAL ABUTMENT SECTION WITH APPROACH SLAB AND ANCHOR SLAB

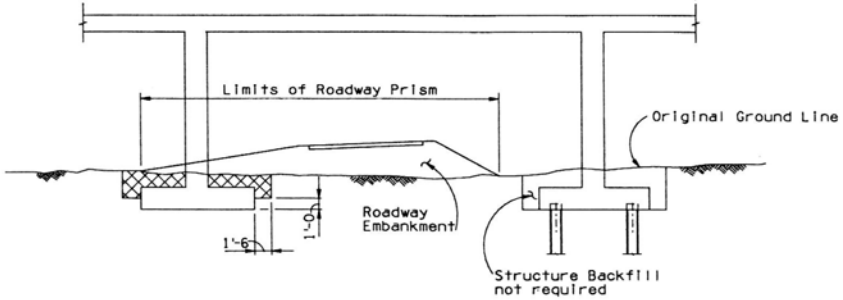

TYPICAL PIER ELEVATION

NOTE: Structure Backfill is required for piers only when the pier falls within the roadway prism.

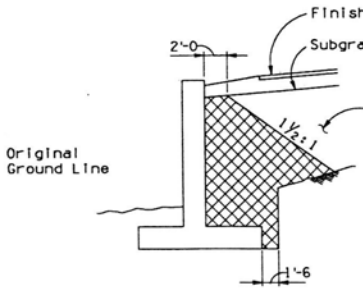

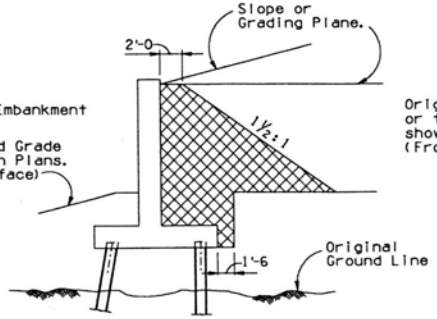

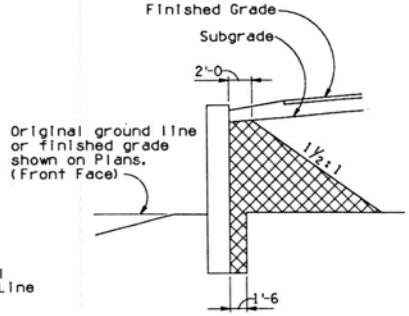

TYPICAL WALL SECTIONS

NOTE: Structure Backfill is required only when the wall falls within the roadway prism.

NOTE:

Indicates Structure Backfill.

Roadway Prism shall be the distance between points of intersection of Roadway Embankment and Original Ground Line.

'Top of Berm' shall mean the top of berm or elevation at point of intersection between front face and slope.

	DESIGN APPROVED	ARIZONA DEPARTMENT OF TRANSPORTATION HIGHWAYS DIVISION STANDARD DRAWINGS	REVISION
	APPROVED FOR DISTRIBUTION	STRUCTURE BACKFILL PAYMENT LIMITS	STANDARD NO. B-19.40

CADD FILENAME= 2FA
VIEW NAME=

DESIGN			NO	DESCRIPTION OF REVISIONS	MADE BY	DATE
DRAWN	CAG	1-73	1	Chg. conc. class	WEB	2-82
CHECKED	WO	3-73	2			
			3			

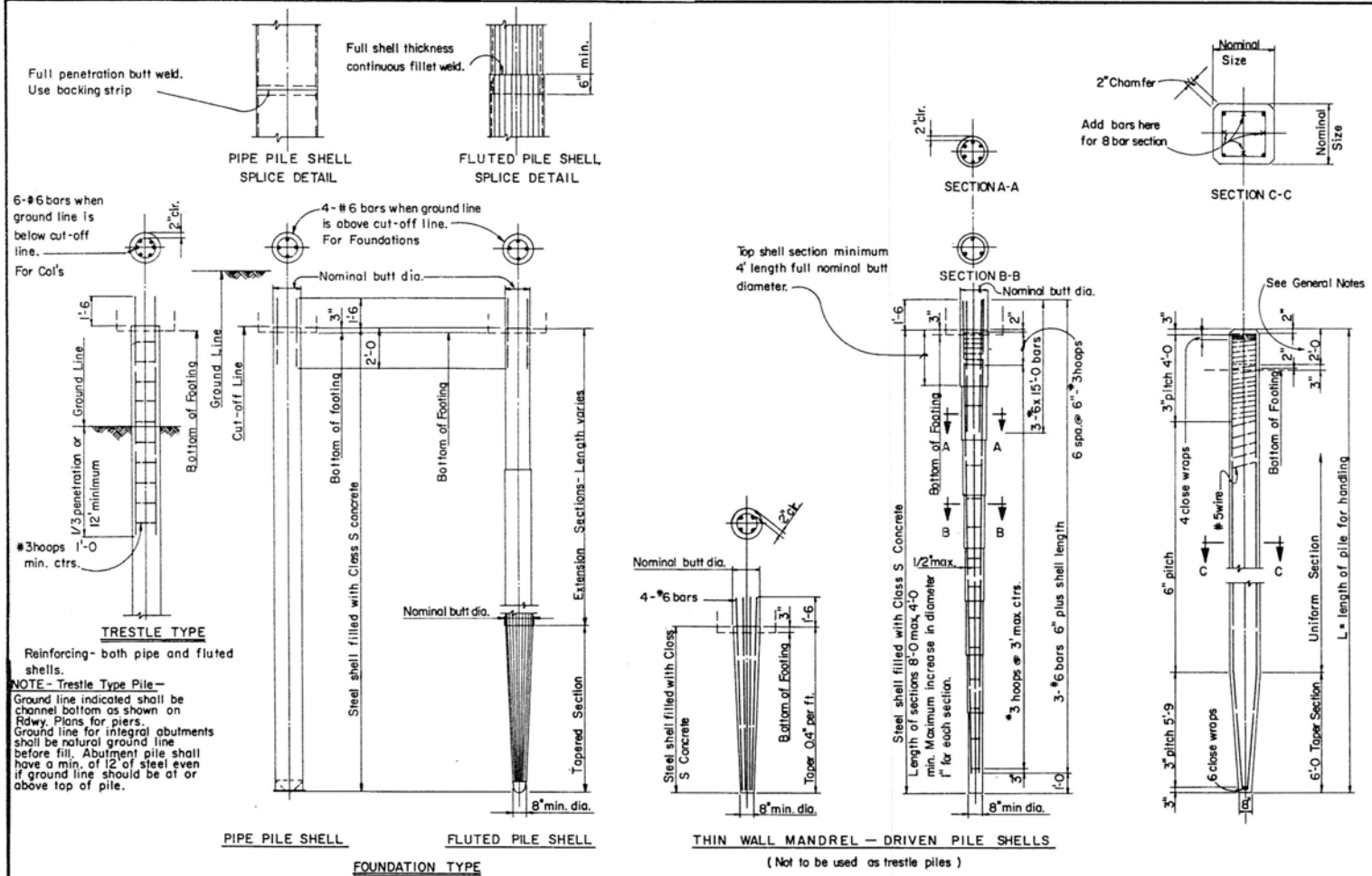

GENERAL NOTES

PRECAST AND CAST-IN-PLACE PILES

Design - AASHTO Standard Specifications for Highway Bridges 1977.

Construction - Arizona Departament of Transportation Standard Specification 1982, revised to date.

Reinforcing Steel shall conform to ASTM Spec. A 615.
Bar sizes #6 and smaller shall be Grade 40, f_s = 20 000 psi.
Bar sizes #7 and larger shall be Grade 60, f_s = 24 000 psi.
Spiral reinforcing shall be cold drawn wire conforming to ASTM Spec. A82.

PRECAST PILES

Precast piles shall be cast 2'-0 longer than net required length, or approved driving head provided. After driving to a depth satisfactory to the Engineer, the excess length shall be trimmed off to 3" above the bottom of the footing and the pile edges beveled. Vertical reinforcement shall be cut off to provide 1'-6 embedment. If extended pile is to be driven further, the longitudinal steel shall be lapped 40 diameters for the splice. Concrete for precast piles shall be Class S, internally vibrated.

CAST-IN-PLACE PILES

Contractor shall be responsible for furnishing shells and waterproof end closure of sufficient strength to drive without distortion, damage or leakage. Type of end closure shall be chosen by contractor to suit driving conditions, and shall not exceed shell diameter plus 1/2". Shells shall be driven only with manufacturer's standard driving head and, if necessary, with a driving mandrel.

Mill inspection of all shells shall conform to current Standard Specifications.

All shells shall be filled to cut off elevation with Class S concrete internally vibrated. (f'_c = 3000 psi)

Trestle bent piles shall have a minimum butt diameter of 14".

All pile material shall be new or unused.

PRECAST PILE PICK-UP NOTE: Pick-up points shall be plainly marked on all piles after removal of forms unless special lifting devices are attached for pick-up and all lifting shall be done at these points.

The use of special embedded or attached lifting devices, the employment of other pick-up points or any other method of pick-up shall be subject to approval by the Engineer.

CAST - IN - PLACE CONCRETE PILES

CAST - IN - PLACE CONCRETE PILES

Type of shell	Min. shell thickness	Pile Shell Specifications
Pipe	.164 in.	ASTM A252 - 50,000 psi min. Ult.
Fluted	9 guage	SAE 1010 or 1015 - 50,000 psi min. Ult.
Mandrel Driven	18 guage	Manufacturer's standard sheet steel.

PRECAST CONCRETE PILES

PRECAST CONCRETE PILES

Pile Size	No. of Bars & Size	Approx. Wt. per Lin. Ft.	Area of nominal cross-sect.	Max. Length L for 1 point pick-up	Max. Length L for 2 point pick-up
14"	4 - #8	205#	196 □"	44'	66'
16"	4 - #9	265	256	46	70
18"	8 - #7	335	324	49	74

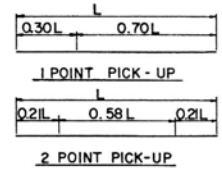

DESIGN APPROVED	ARIZONA DEPARTMENT OF TRANSPORTATION HIGHWAYS DIVISION STANDARD DRAWINGS	REVISION
APPROVED FOR DISTRIBUTION	PRECAST AND CAST-IN-PLACE CONCRETE PILES	STANDARD NO. B-20.10

DESIGN			NO.	DESCRIPTION OF REVISIONS	MADE BY	DATE
DRAWN	CAG	1-73	1	Changed Notes	WEB.	12-82
CHECKED	WO	3-73	2			
			3			

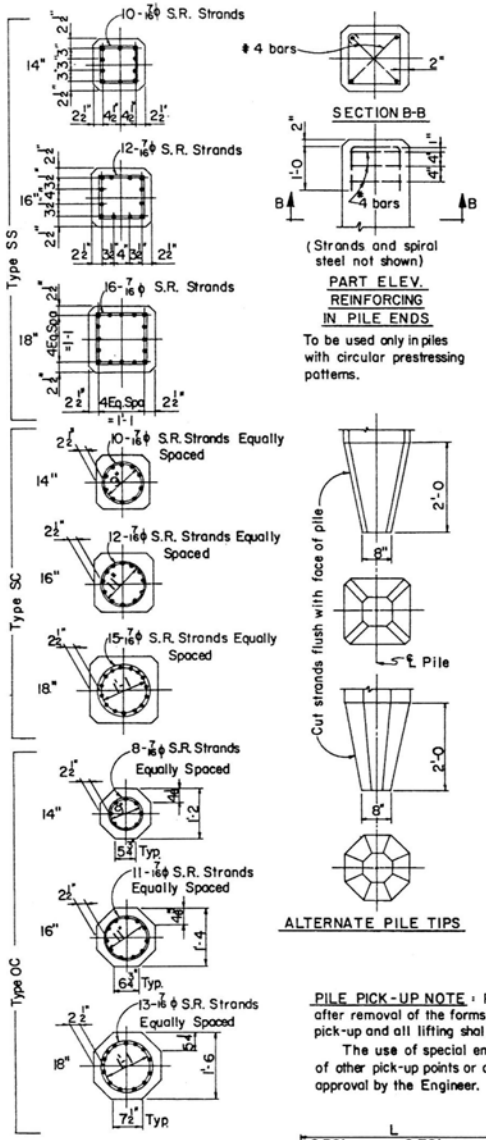

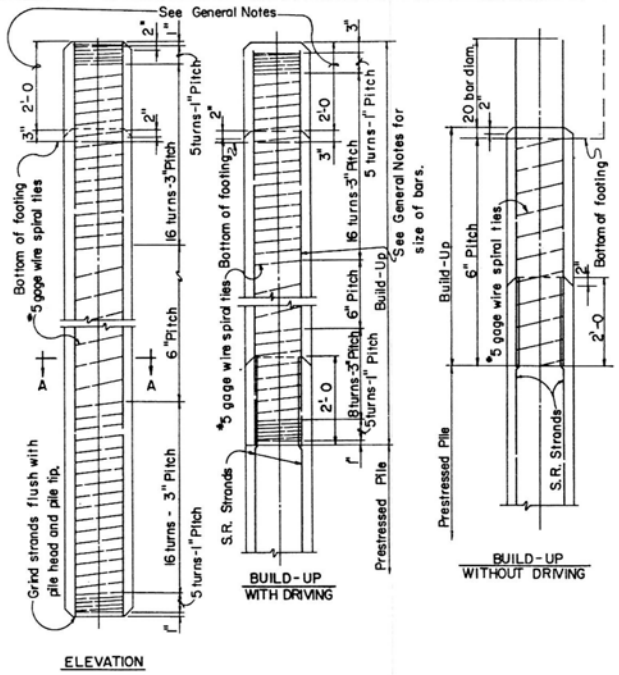

GENERAL NOTES

DESIGN - AASHTO Standard Specifications For Highway Bridges 1977.

CONSTRUCTION - Standard Specifications of the Ariz. Dept. of Transportation Edition 1982. All construction Specifications for precast concrete piling shall apply except as otherwise noted here.

CONCRETE - Concrete in the prestressed pile shall be Class S and shall have a minimum compressive cylinder strength (f'c) of 5000 psi at 28 days. Compressive cylinder strength at transfer of prestressing force shall be not less than 4000 psi. Piles may be removed from casting bed to nearby storage anytime after transfer of stress. Shipment from plant site or driving will not be permitted until full compressive cylinder strength is reached. Concrete in Build-Ups shall be Class 'S' internally vibrated having a minimum compressive cylinder strength (f'c) of 2800 psi at 28 days. Build-Ups with driving shall have reached full compressive cylinder strength before driving starts.

MILD STEEL REINFORCING - Spiral reinforcement shall be cold drawn wire conforming to ASTM, A-82. All other mild reinforcement shall be in accordance with ASTM, A-615 Grade 40.

PRESTRESSING REINFORCING - Seven-wire stress relieved strand conforming to the requirements of ASTM, A-416 shall be used. In general the unit prestress after losses shall not exceed 0.2 f'c. Initial tension in strands before release shall be as follows:

3/8"φ Strands - 14,000#
7/16"φ Strands - 18,900#
1/2"φ Strands - 25,200#

The unit prestress after losses shall be not less than 700 psi.

TOLERANCES - Pile ends shall be plane surfaces and perpendicular to axis of pile. The maximum sweep (deviation from straightness measured along two perpendicular faces of the pile, while not subject to bending forces) shall not exceed 1/8" in any 10' of its length, 3/8" in any 40' or 3/16" x (total length in ft.) ÷ 20 feet.

BUILD-UPS - Build-ups as detailed may be used only if specified or authorized by the Engineer. Attachment of the build-up to the pile shall be by the same methods given for pile heads except that edges need not be beveled. If the joint is subject to conditions which would cause deterioration, suitable steps satisfactory to the Engineer shall be taken to protect the joint. The minimum area of vertical reinforcing steel shall be 1-1/2 % of the gross cross-section of concrete. Bars shall be placed in a symmetrical pattern of not less than four bars.

PILE HEADS - Prestressed piles shall be cast 2'-0 longer than net required length. After driving to a depth satisfactory to the Engineer the excess length shall be cut off on a plane normal to the axis of the pile and the pile edges beveled. Prestressing strands shall be cut off to provide 2'-0 embedment into cap, footing or build-up. Any concrete at the pile head damaged below cut off elevation in driving shall be removed to solid material and built-up to cut off elevation. If the pile head is a built-up section, it shall be trimmed same as a pre-stressed section and the vertical bars cut off to provide 20 diameters embedment into the cap or footing.

FORMS - The use of steel forms on concrete founded casting beds is required unless otherwise approved in advance by the Engineer. Outer forms shall enclose all except top horizontal surface. The side forms may have a maximum draft on each side not exceeding 1/4" per foot. All corners shall be chamfered to 1-1/2" or rounded to 2" radius. Forms for piles shall be such as to avoid the formation of fins at intersection of surfaces. Top of concrete casting shall be given a uniformly smooth finish to match the finish surface of the formed sides.

PILE PICK-UP NOTE: Pick-up points shall be plainly marked on all piles after removal of the forms unless special lifting devices are attached for pick-up and all lifting shall be done at these points.

The use of special embedded or attached lifting devices, the employment of other pick-up points or any other method of pick-up shall be subject to approval by the Engineer.

1 POINT PICK-UP

2 POINT PICK-UP

SQUARE PILE PROPERTIES

Pile Size	No. and size of S.R. Strands: Square Pattern	Circular Pattern	Unit Prestress after losses: Square Pattern	Circular Pattern	Approx. Wt. per Lin. Ft.	Area of nominal cross-section	Section modulus of cross-section	Max. Lgth "L"* 1 Point Pick-Up: Square Pattern	Circular Pattern	Max. Lgth "L"* 2 Point Pick-Up: Square Pattern	Circular Pattern
14	10-7/16φ	10-7/16φ	771psi	771psi	205#	196 in²	457 in³	57'	57'	82'	82'
16	12-7/16φ	12-7/16φ	709	709	265	256	683	60	60	85	85
18	16-7/16φ	15-7/16φ	747	700	335	324	972	64	63	92	90

*The length "L" is the distance end to end of pile including alternate pile tip used. Tabulated lengths may be used for minimum pick-up lengths when the concrete has attained a compressive cylinder strength of 5,000 psi. If piles are picked up when the concrete strength is less than 5,000 psi, the maximum pick-up length shall be the tabulated length reduced by 3%.

OCTAGON PILE PROPERTIES

Pile Size	No. & size of S.R. Strands	Unit Pre-stress after losses	Approx. Wt. per Lin. Ft.	Area of nominal cross sect.	Section modulus of cross sect.	Max. lgth "L"* 1 point pick-up	Max. lgth "L"* 2 point pick-up
14	8-7/16φ	747 psi	170#	162 in²	301 in³	50'	72'
16	11-7/16φ	785	220	212	449	55	78
18	13-7/16φ	733	280	268	639	57	81

DESIGN APPROVED	ARIZONA DEPARTMENT OF TRANSPORTATION HIGHWAYS DIVISION STANDARD DRAWINGS	REVISION
APPROVED FOR DISTRIBUTION	PRESTRESSED CONCRETE PILES	STANDARD NO. B-20.20

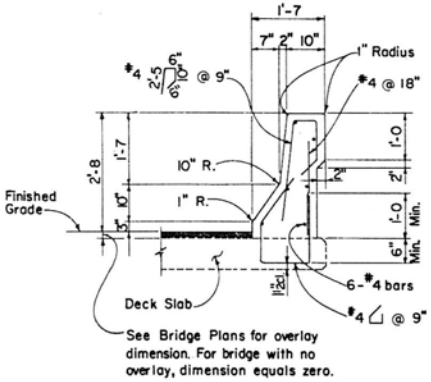

TYPE A

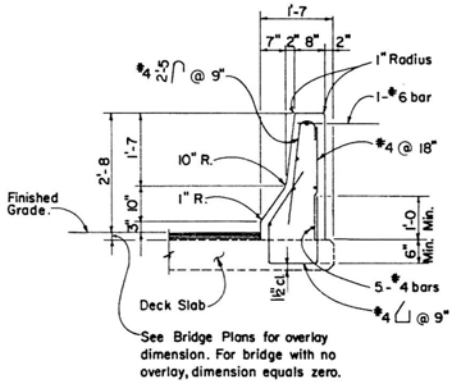

TYPE B

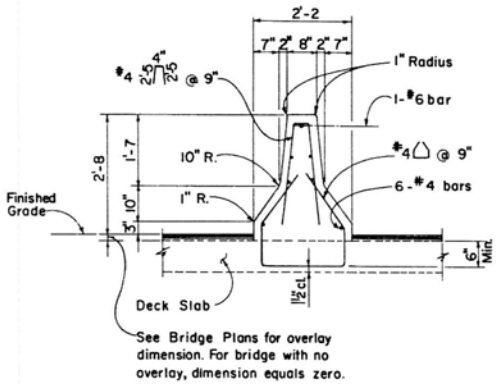

TYPE C

GENERAL NOTES:

Construction - Arizona Department of Transportation Standard Specifications for Road and Bridge Construction, Edition of 1982, revised to date.

Design - AASHTO Standard Specification for Highway Bridges, 1983, revised to date.

Loading - Class HS20-44

All concrete shall be Class "S" f'_c = 3000 psi.

Reinforcing steel shall conform to ASTM Specification A 615. Bar sizes are designed as Grade 40 and furnished as Grade 40 or Grade 60, f_s = 20,000 psi.

All dimensions for reinforcing steel shall be to center of bars unless noted otherwise.

All reinforcing steel shall have 2" clear cover unless noted otherwise.

Dimensions shall not be scaled from drawing.

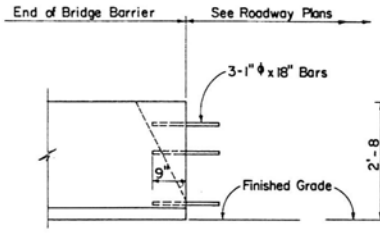

ROADWAY ELEVATION

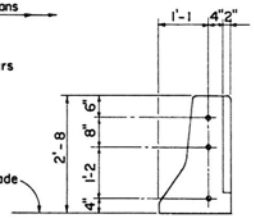

END VIEW

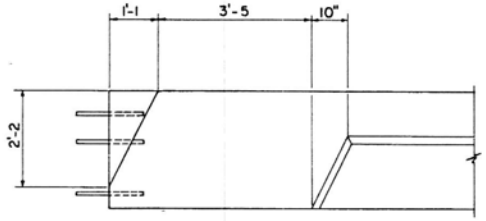

FASCIA ELEVATION

DETAIL A
(Use with Barrier Detail Type A)

NOTE:
Details A, B and C show end treatment of concrete barriers and are to be used unless other end treatment is called for on plans.

APPROXIMATE QUANTITIES		
Barrier Type	Class "S" Conc. f'_c = 3000 psi C.Y.	Reinf. Steel Lbs.
A	0.0985	8.995
B	0.0918	8.758
C	0.1178	10.312

NOTE:
Quantities are per lineal foot with no overlay. Reinforcing bars embedded in deck slab are not included in Reinforcing Steel Quantity.

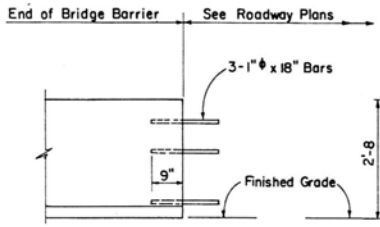

ELEVATION

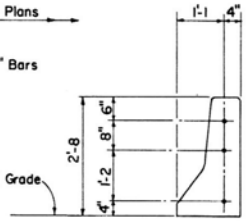

END VIEW

DETAIL B
(Use with Barrier Detail Type B)

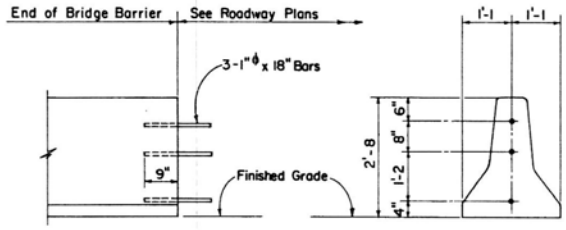

ELEVATION

END VIEW

DETAIL C
(Use with Barrier Detail Type C)

DESIGN APPROVED	ARIZONA DEPARTMENT OF TRANSPORTATION HIGHWAYS DIVISION STANDARD DRAWINGS	REVISION 8/85
APPROVED FOR DISTRIBUTION	BRIDGE CONCRETE BARRIER DETAILS	STANDARD NO. B-21.18

DESIGN			NO.	DESCRIPTION OF REVISIONS	MADE BY	DATE
DRAWN	JEM	3-85	1	Add Block #1, Washers, etc.	JEM	10-86
CHECKED			2	Add Detail X	JEM	3-88
			3			

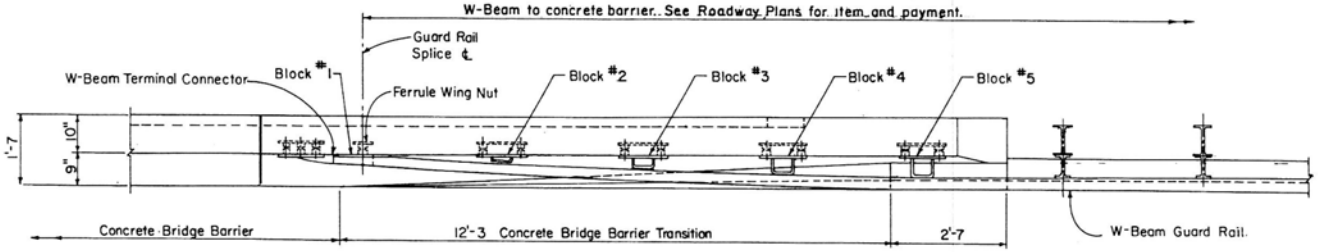

PLAN

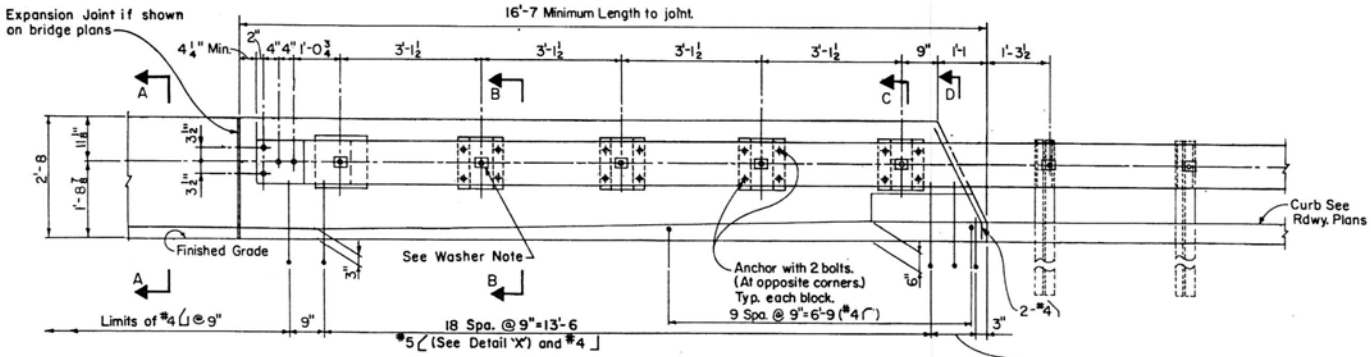

ROADWAY ELEVATION

Washer Note:
Rectangular Plate Washer (ARTBA designation) required under head of five bolts along concrete transition.

GENERAL NOTES

Construction-Arizona Department of Transportation Standard Specifications for Road and Bridge Construction.

Design-AASHTO Standard Specifications for Highway Bridges, 1983, revised to date.

All concrete shall be Class S, f'_c = 3000 psi.

Reinforcing Steel shall conform to ASTM Specification A 615. Bar size #6 and smaller are designed as grade 40 and furnished as Grade 40 or Grade 60, fs = 20,000 psi.

All dimensions for reinforcing steel shall be to center of bars unless noted otherwise.

All reinforcing steel shall have 2" clear cover unless noted otherwise.

Structural Steel shall conform to ASTM Specification A36 unless noted otherwise.

The terminal connectors and blocks shall be galvanized after fabrication in accordance with ASTM Spec. A123.

Bolts and washers shall be galvanized or, at the contractors option, stainless steel bolts and washers may be used as an alternate for the $\frac{7}{8}$"ϕ x $2\frac{3}{4}$" galvanized bolts and washers. They shall conform to or exceed the mechanical requirements of ASTM A307.

Terminal connectors, blocks and hardware shall be furnished and installed with roadway approach guard rail.

Insert assemblies shall be placed in new construction.

Ferrules shall be made from steel meeting the requirements of ASTM A108, grade 12 L14.

Wire struts shown in the insert assembly shall have a minimum tensile strength of 100,000 psi.

The insert assembly shall be assembled in the shop. Bolt threads may be re-cut as necessary to insure fit.

The Bridge Quantities include all concrete and reinforcing steel for barrier transitions.

The cost of the insert assembly will consist of the insert assembly, bolts and washers complete in place and shall be included in the unit price bid for barrier concrete.

See Std. B-21.21 for Terminal Connector Anchor Assembly, Ferrule Wing Nut and Block Details.

Dimensions shall not be scaled from drawings.

APPROXIMATE QUANTITIES	
Class 'S' Concrete	1.593 C.Y.
Reinforcing Steel	146 lbs.

Note: Quantities are for one transition 16'-7 in length with no overlay. Reinf. bars embedded in deck slab or wingwall are not included in Reinf. Steel Quantity.

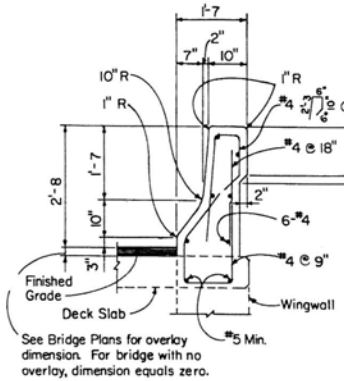

SECTION A-A

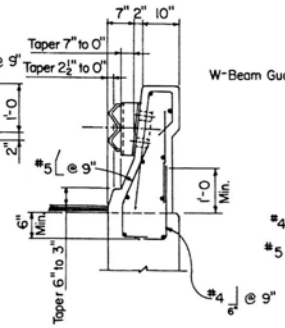

SECTION B-B

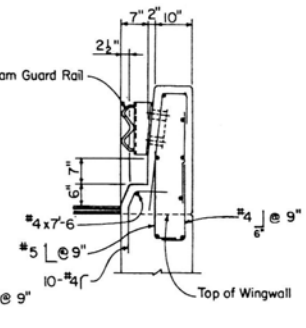

SECTION C-C

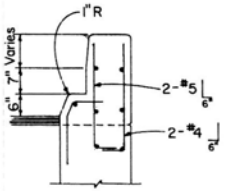

SECTION D-D

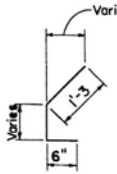

DETAIL 'X'

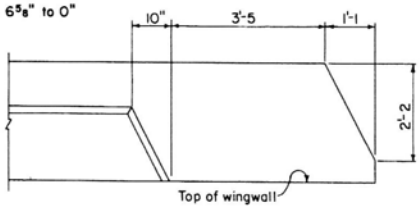

FASCIA ELEVATION
Showing treatment at end of barrier

DESIGN APPROVED	ARIZONA DEPARTMENT OF TRANSPORTATION HIGHWAYS DIVISION STANDARD DRAWINGS	REVISION
J. D. Davis		7-88
APPROVED FOR DISTRIBUTION	BRIDGE CONCRETE BARRIER TRANSITION WITH CURB	STANDARD NO.
A. E. Fickett		B-21.19

DESIGN			NO.	DESCRIPTION OF REVISIONS	MADE BY	DATE
DRAWN	JEM	3-85	1	Add-Block #1, Washer, etc.	JEM	10-86
CHECKED	KW	3-85	2	Add Detail X	JEM	3-88
			3			

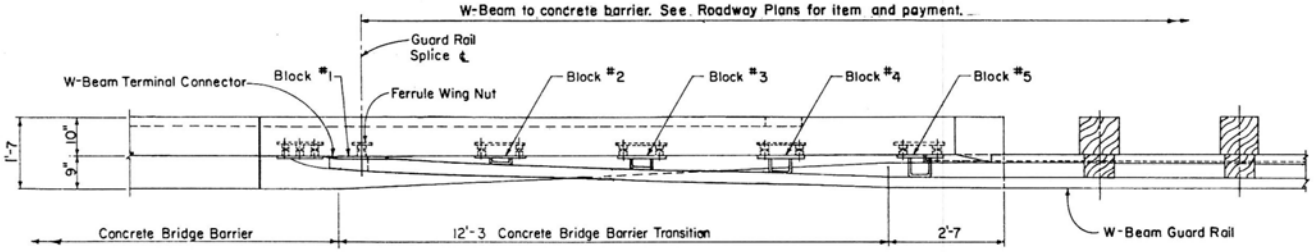

PLAN

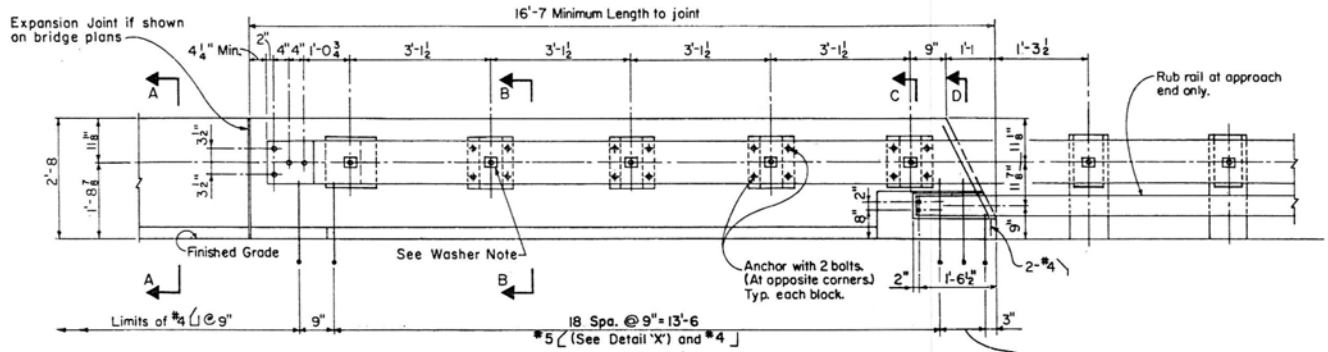

ROADWAY ELEVATION

Washer Note:
Rectangular Plate Washer (ARTBA designation) required under head of five bolts along concrete transition.

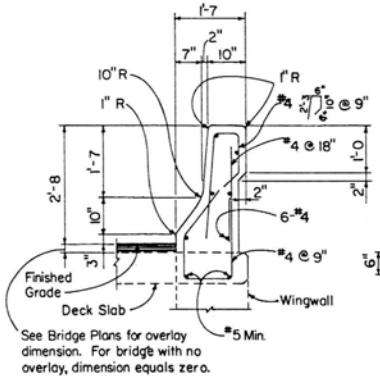

SECTION A-A

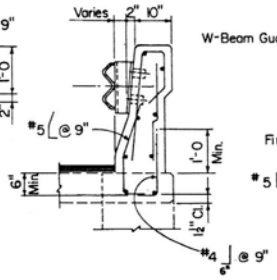

SECTION B-B

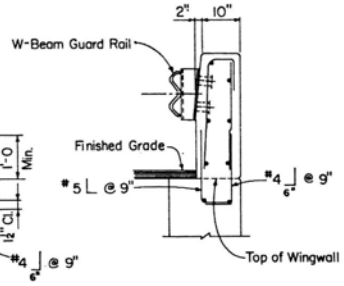

SECTION C-C

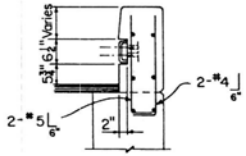

SECTION D-D

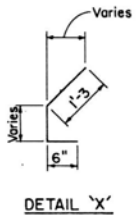

DETAIL 'X'

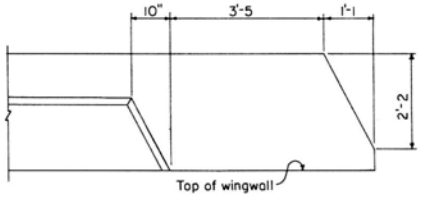

FASCIA ELEVATION
Showing treatment at end of barrier

GENERAL NOTES

Construction-Arizona Department of Transportation Standard Specifications for Road and Bridge Construction.
Design-AASHTO Standard Specifications for Highway Bridges, 1983, revised to date.
All concrete shall be Class S, f'_c = 3000 psi.
Reinforcing Steel shall conform to ASTM Specification A 615. Bar size #6 and smaller are designed as grade 40 and furnished as Grade 40 or Grade 60, fs = 20,000 psi.
All dimensions for reinforcing steel shall be to center of bars unless noted otherwise.
All reinforcing steel shall have 2" clear cover unless noted otherwise.
Structural Steel shall conform to ASTM Specification A36 unless noted otherwise.
The terminal connectors and blocks shall be galvanized after fabrication in accordance with ASTM Spec. A123.
Bolts and washers shall be galvanized or, at the contractors option, stainless steel bolts and washers may be used as an alternate for the 7/8" ϕ x 2¾" galvanized bolts and washers. They shall conform to or exceed the mechanical requirements of ASTM A307.
Terminal connectors, blocks and hardware shall be furnished and installed with roadway approach guard rail.
Insert assemblies shall be placed in new construction.
Ferrules shall be made from steel meeting the requirements of ASTM A108, grade 12 L14
Wire struts shown in the insert assembly shall have a minimum tensile strength of 100,000 psi.
The insert assembly shall be assembled in the shop. Bolt threads may be re-cut as necessary to insure fit.
The Bridge Quantities include all concrete and reinforcing steel for barrier transition.
The cost of the insert assembly will consist of the insert assembly, bolts and washers complete in place and shall be included in the unit price bid for barrier concrete.
See Std. B-21.21 for Terminal Connector Assembly, Ferrule Wing Nut and Block Details.
Dimensions shall not be scaled from drawings.

APPROXIMATE QUANTITIES	
Class 'S' Concrete	1.516 C.Y.
Reinforcing Steel	141 lbs.

Note: Quantities are for one transition 16'-7 in length with no overlay. Reinf. bars embedded in deck slab or wingwall are not included in Reinf. Steel Quantity.

DESIGN APPROVED	ARIZONA DEPARTMENT OF TRANSPORTATION HIGHWAYS DIVISION STANDARD DRAWINGS	REVISION 7-88
APPROVED FOR DISTRIBUTION	BRIDGE CONCRETE BARRIER TRANSITION	STANDARD NO. B-21.20

DESIGN			NO.	DESCRIPTION OF REVISIONS	MADE BY	DATE
DRAWN	W.E.B.	12-82	1	Changed ℄ Dim. & add Wing Nut Det.	JEM	2-85
CHECKED	N.A.B.	12-82	2	Revised Block Dimensions	JEM	10-86
			3			

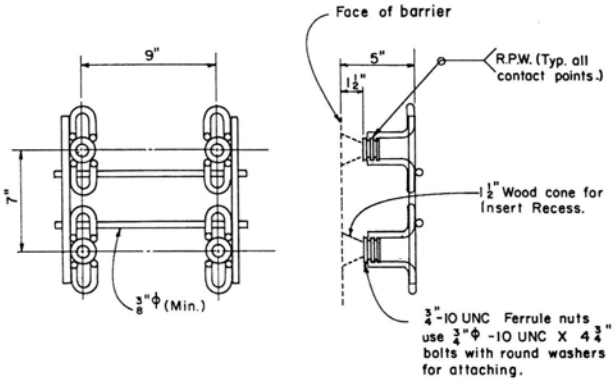

BLOCK ANCHOR ASSEMBLY

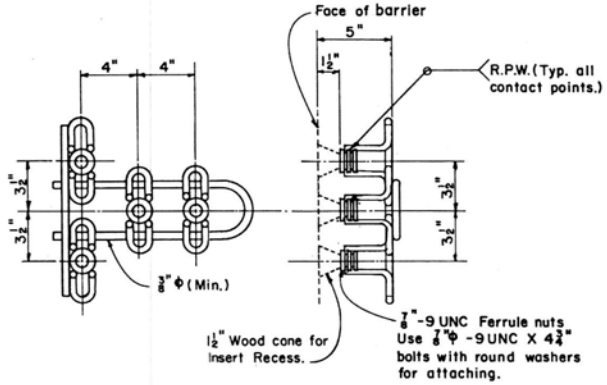

TERMINAL CONNECTOR ANCHOR ASSEMBLY

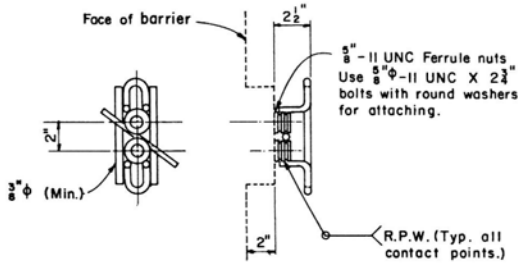

RUB RAIL
TERMINAL ANCHOR

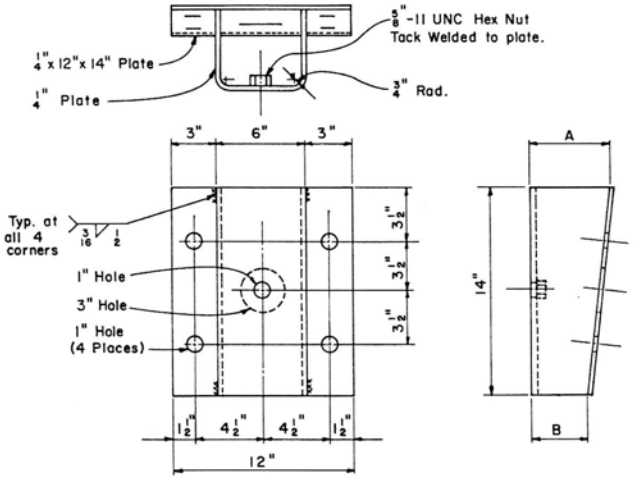

BLOCK DETAILS

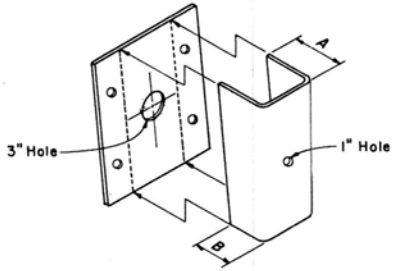

DIMENSIONS		
Block #	A	B
2	1 1/4"	7/8"
3	2 1/2"	1 3/4"
4	3 11/16"	2 5/8"
5	4 15/16"	3 7/16"

Note: Block #1 is a ℙ 12" x 1/4" x 14"

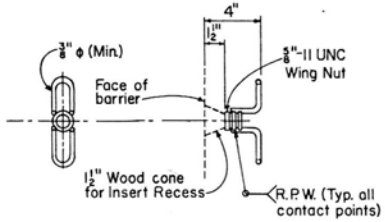

FERRULE WING NUT DETAIL

DESIGN APPROVED	ARIZONA DEPARTMENT OF TRANSPORTATION HIGHWAYS DIVISION STANDARD DRAWINGS	REVISION 10-86
APPROVED FOR DISTRIBUTION	BLOCK AND TERMINAL CONNECTOR ASSEMBLY DETAILS	STANDARD NO. B-21.21

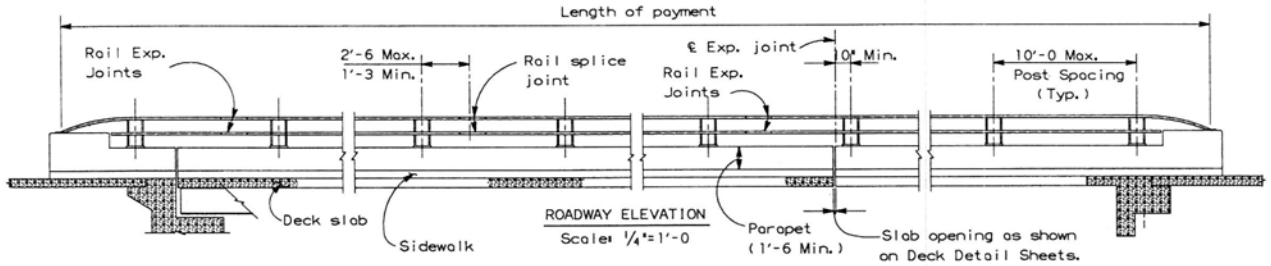

ROADWAY ELEVATION
Scale: 1/4"=1'-0

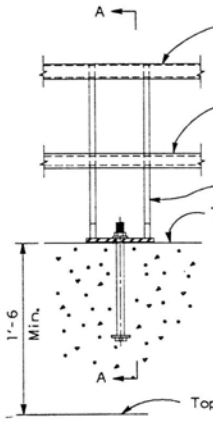

BRIDGE RAIL ELEVATION
Scale: 1 1/2" = 1'-0

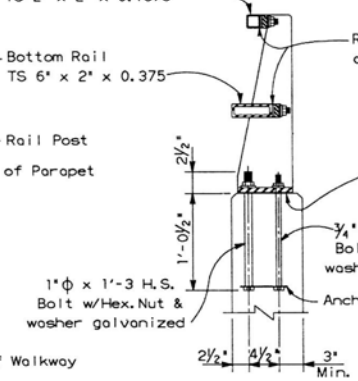

SECTION A-A
Scale: 1 1/2" = 1'-0

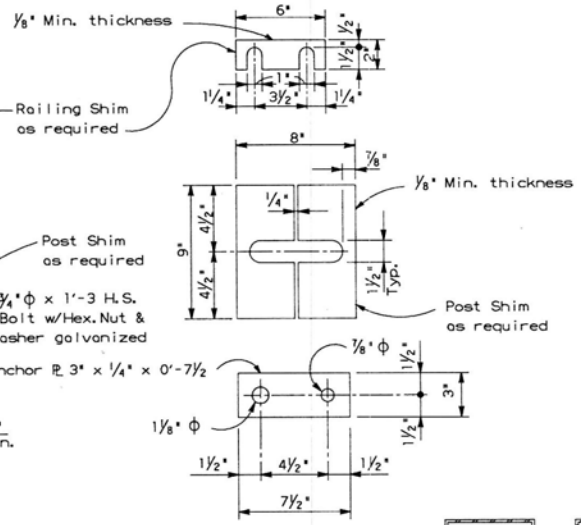

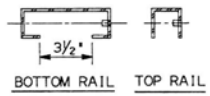

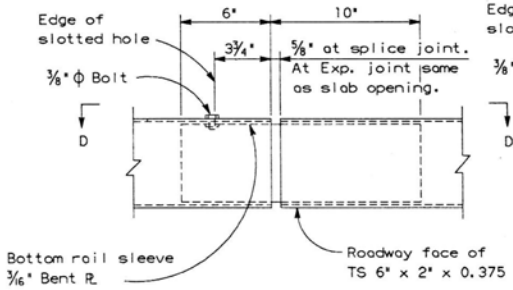

BOTTOM RAIL PLAN

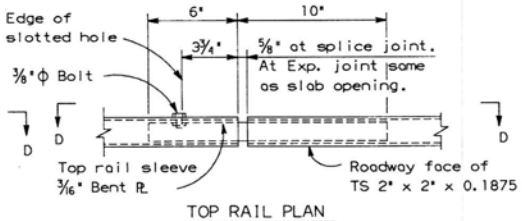

TOP RAIL PLAN

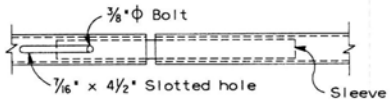

VIEW D-D

RAIL SPLICE DETAIL
Scale: 3" = 1'-0

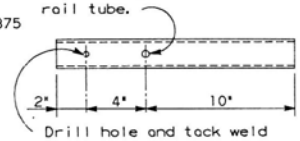

RAIL SPLICE SLEEVE DETAIL
Scale: 3"=1'-0

MATERIAL

Materials for metal bridge rail shall be as follows:
Steel: All anchor plates, post construction and steel tubing shall be AASHTO M183 (ASTM A36) and shall be galvanized after fabrication in accordance with AASHTO M11 (ASTM A123).
Bolts: Anchor bolts, studs, nuts and washers shall be AASHTO M164 (ASTM A325). All exposed portions of assembly shall be galvanized in accordance with AASHTO M1 (ASTM A123).

GENERAL

Construction - Arizona Department of Trasportation Standard Specification for Road and Bridge Construction, Edition of 1982 and 1985 Supplement.
Design - AASHTO Standard Specification for Highway Bridges, Edition of 1983, and 1984 and 1985 Supplements.
All posts shall be normal to parapet.
Panel lengths of rail shall be continuous and attached to a minimum of two posts.
Rail splices shall be located at barrier rail joints, deck expansion joints and abutment expansion joints and shall be constructed as detailed.
Torque rail to post nuts to 175 ft. Lbs. (Exception - TS 2x2 Tube is wrench tight).
For spacing of rail posts, conctete dimensions and reinforcing steel, see Project Plans.
Dimensions shall not be scaled from drawings.
This Standard shall only be used in conjunction with a sidewalk and barrier curb or traffic barrier.

WELDING NOTE

All welding shall conform to the requirements of the American Welding Society, Structural Welding code, D1.1, 1980, revised to date, and as modified by the AASHTO Standard Specifications for Welding of Structural Steel Highway Bridges, 1981, revised to date.

	DESIGN APPROVED	ARIZONA DEPARTMENT OF TRANSPORTATION HIGHWAYS DIVISION STANDARD DRAWINGS	REVISION
	APPROVED FOR DISTRIBUTION 2-15-89	TRAFFIC & PEDESTRIAN RAIL	STANDARD NO. B-22.40

CADD FILENAME: 2FA
VIEW NAME:

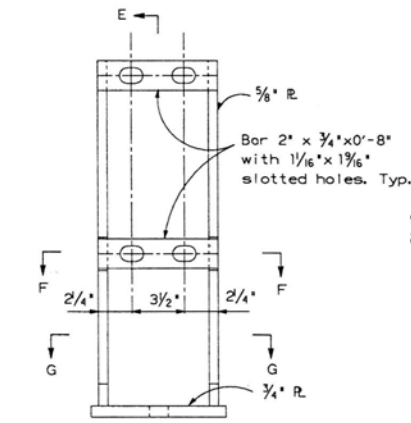

ELEVATION

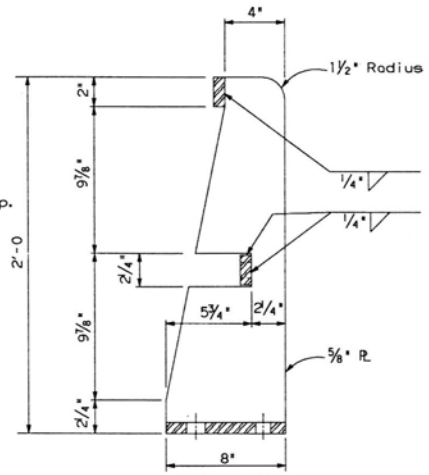

SECTION E-E

RAIL POST DETAILS
Scale: 3"=1'-0

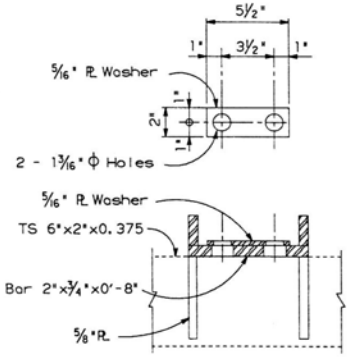

SECTION F-F
Scale: 3"=1'-0

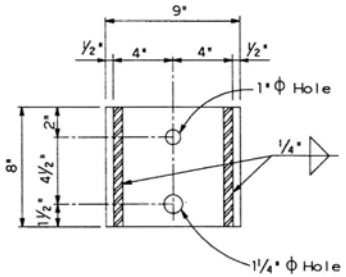

SECTION G-G
Scale: 3"=1'-0

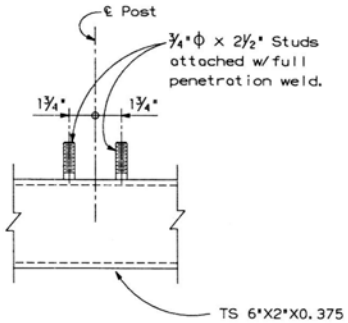

BOTTOM RAIL PLAN

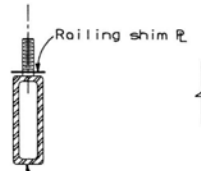

STUD BOLT DETAILS
Scale: 3"=1'-0

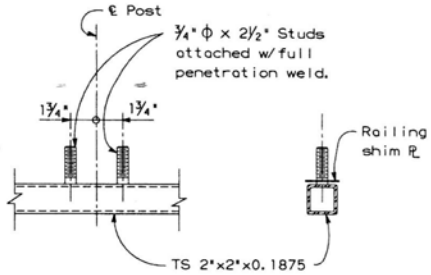

TOP RAIL PLAN

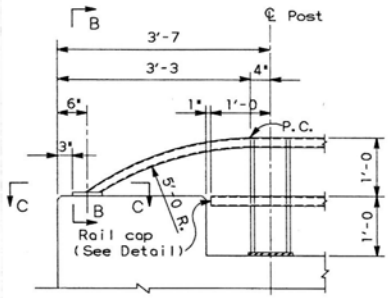

BRIDGE RAIL TERMINATION ELEVATION
Scale: 1"=1'-0

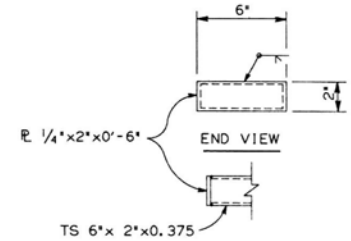

RAIL CAP
Scale: 3"=1'-0

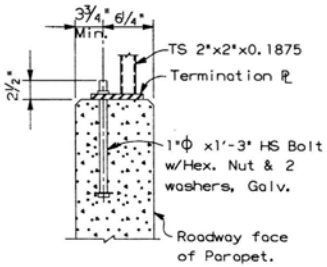

SECTION B-B
Scale =1 1/2"=1'-0

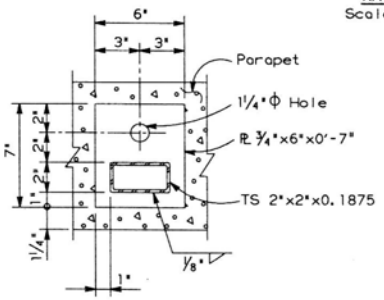

SECTION C-C
Scale: 3"=1'-0

	DESIGN APPROVED	ARIZONA DEPARTMENT OF TRANSPORTATION HIGHWAYS DIVISION STANDARD DRAWINGS	REVISION
	APPROVED FOR DISTRIBUTION 2-18-87	TRAFFIC & PEDESTRIAN RAIL	STANDARD NO. B-22.41

CADD FILENAME: 22A
VIEW NAME:

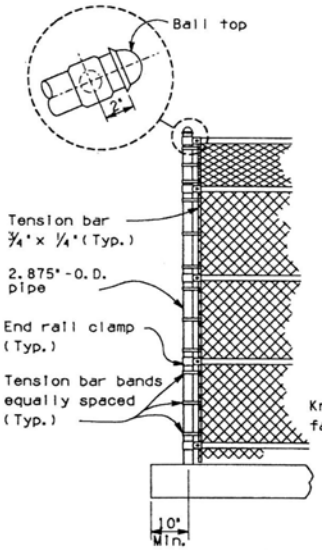

TYPICAL END POST ELEVATION

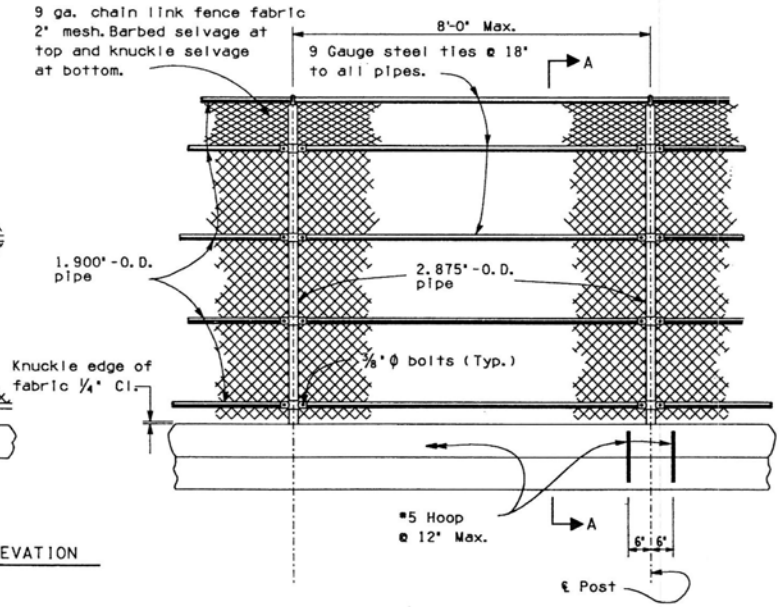

TYPICAL PANEL ELEVATION

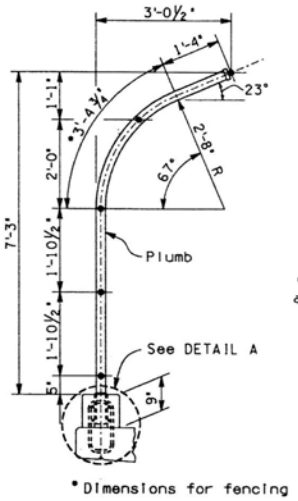

SECTION A-A
(Typical interior post)

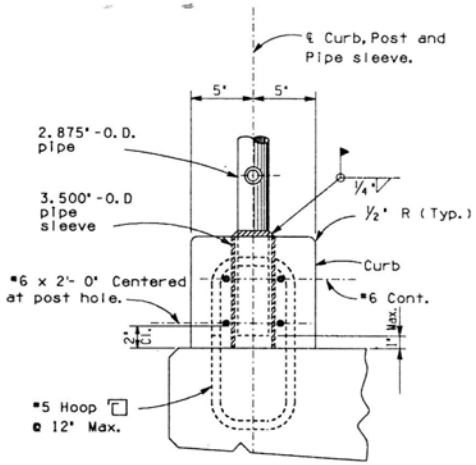

DETAIL A

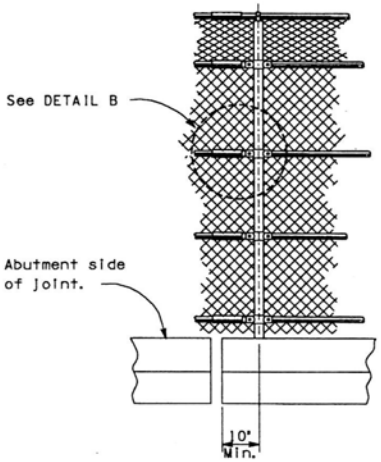

DETAIL AT EXPANSION JOINT

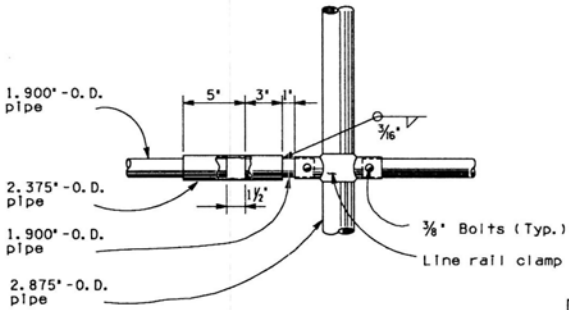

DETAIL B

GENERAL NOTES:

Chain link fence fabric, posts, fittings and hardware shall conform to AASHTO M181 - Grade I or Grade II. The zinc coated fabric shall be Class A.

All galvanizing that has been damaged in handling, transporting or welding shall be repaired by the application of a paste compound of an approved zinc powder and flux.

All exposed edges shall be smooth.

All bolt heads shall be to the inside.

	DESIGN APPROVED	ARIZONA DEPARTMENT OF TRANSPORTATION HIGHWAYS DIVISION STANDARD DRAWINGS	REVISION 7-88
	APPROVED FOR DISTRIBUTION	PEDESTRIAN FENCE DETAILS WITH CURB	STANDARD NO. B-22.50

CADD FILENAME= 2FA
VIEW NAME=

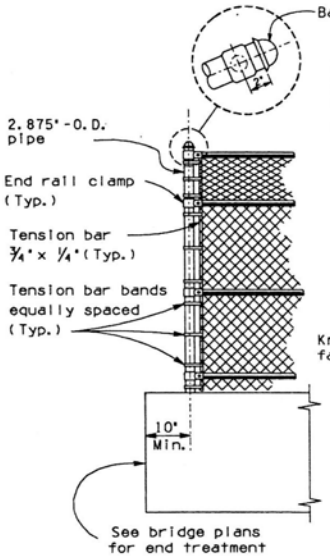

TYPICAL END POST ELEVATION

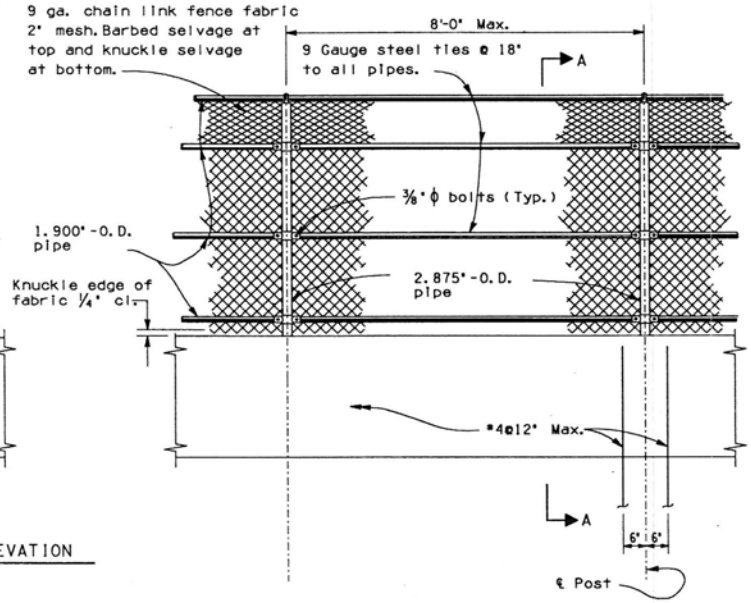

TYPICAL PANEL ELEVATION

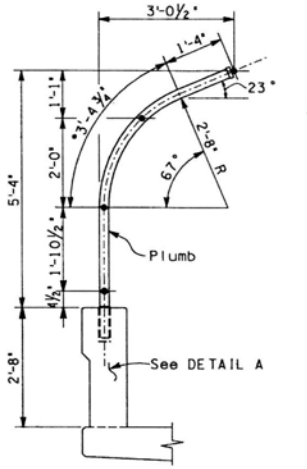

• Dimensions for fencing

SECTION A-A

(Typical Interior post)

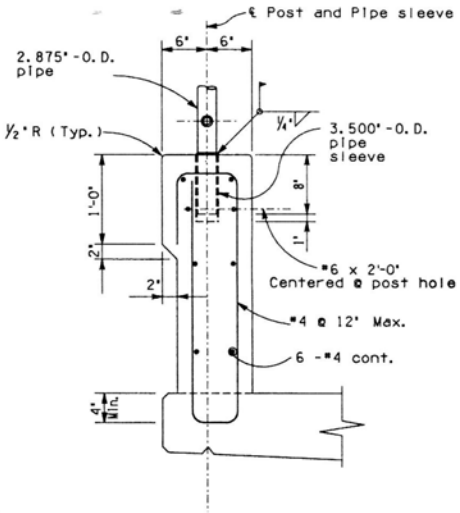

DETAIL A

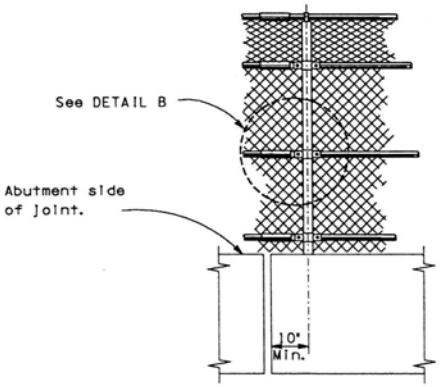

DETAIL AT EXPANSION JOINT

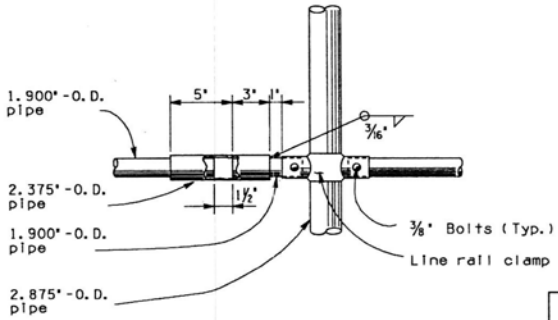

DETAIL B

GENERAL NOTES:

Chain link fence fabric, posts, fittings and hardware shall conform to AASHTO M 181 - Grade I or Grade II. The zinc coated fabric shall be Class A.

All galvanizing that has been damaged in handling, transportation or welding shall be repaired by the application of a paste compound of an approved zinc powder and flux.

All exposed edges shall be smooth.

All bolt heads shall be to the inside.

	DESIGN APPROVED	ARIZONA DEPARTMENT OF TRANSPORTATION HIGHWAYS DIVISION STANDARD DRAWINGS	REVISION 7-88
	APPROVED FOR DISTRIBUTION	PEDESTRIAN FENCE DETAILS WITH PARAPET	STANDARD NO. B-22.60

CADD FILENAME= 2FA
VIEW NAME=

DESIGN			NO.	DESCRIPTION OF REVISIONS	MADE BY	DATE	NO.	DESCRIPTION OF REVISIONS	MADE BY	DATE
DRAWN	KST	2-73	1	Removed 2:1 Rock Slope note	JTW	7-76	4	Removed Detail B, Add Table	JEM	10-86
CHECKED	JRM	3-73	2	Add Filter fabric.	CH	8-82	5			
			3	Changed R.R. Rail Description	JEM	3-85	6			

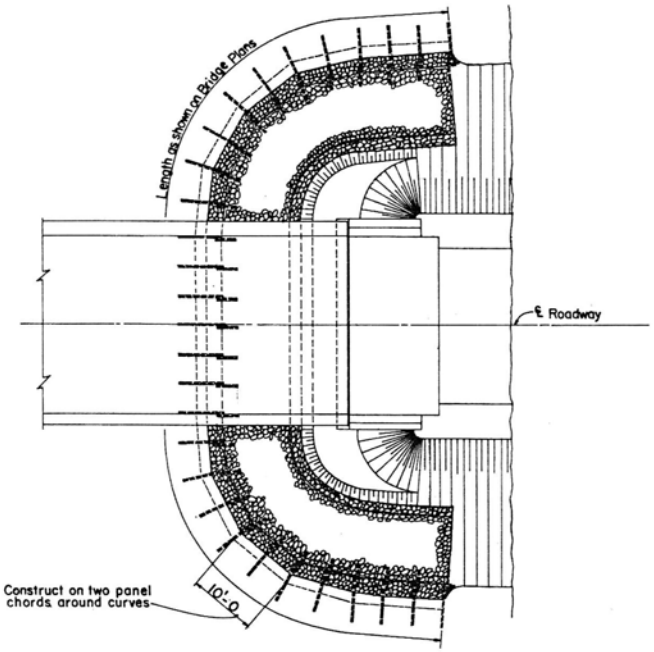

PLAN OF BANK PROTECTION AT ABUTMENT
Scale: 1" = 10'

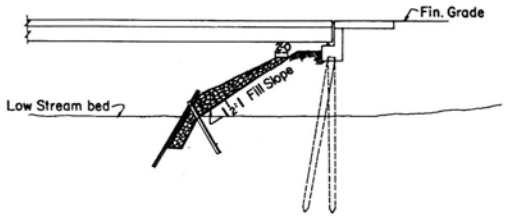

SECTION ON ℄ ROADWAY

RAIL CONNECTION DETAIL
Scale: 1½" = 1'-0
Burn holes through rails in field and bolt together as shown

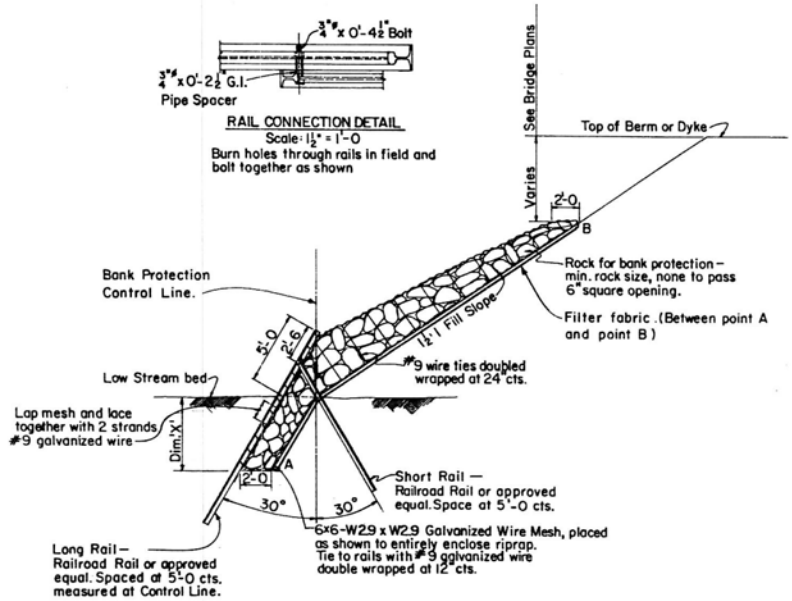

TYPICAL SECTION
Scale: 1/4" = 1'-0

Type	Dim. 'X'	Min. Rail Length	
		Long Rail	Short Rail
A	5'-0	22'	10'
B	7'-6	25'	13'
C	10'-0	28'	16'

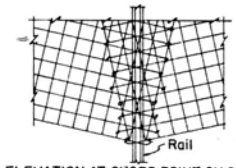

ELEVATION AT CHORD POINT ON CURVE
Scale: 1/2" = 1'-0

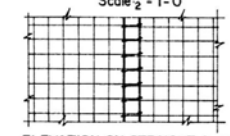

ELEVATION ON STRAIGHT A-WAY
Scale: 1/2" = 1'-0

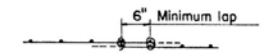

SECTION
Scale: 1" = 1'-0

WIRE MESH SPLICE DETAILS

GENERAL NOTES

Construction – St'd. Spec's. Ariz. Dept. of Transportation Edition of 1982, revised to date.

Rails may be either new or used. If used rails are furnished they shall be free from severe corrosion and equal to 95% of original section. Rails shall have a minimum weight per yard of 50 pounds.

All wire mesh, bolts, pipe spacers and tie wire shall be galvanized.

DESIGN APPROVED	ARIZONA DEPARTMENT OF TRANSPORTATION HIGHWAYS DIVISION STANDARD DRAWINGS	REVISION
R.C. Buchler		10-86
APPROVED FOR DISTRIBUTION	RAIL BANK PROTECTION FOR BRIDGES	STANDARD NO.
E. Schenk		B-23.10

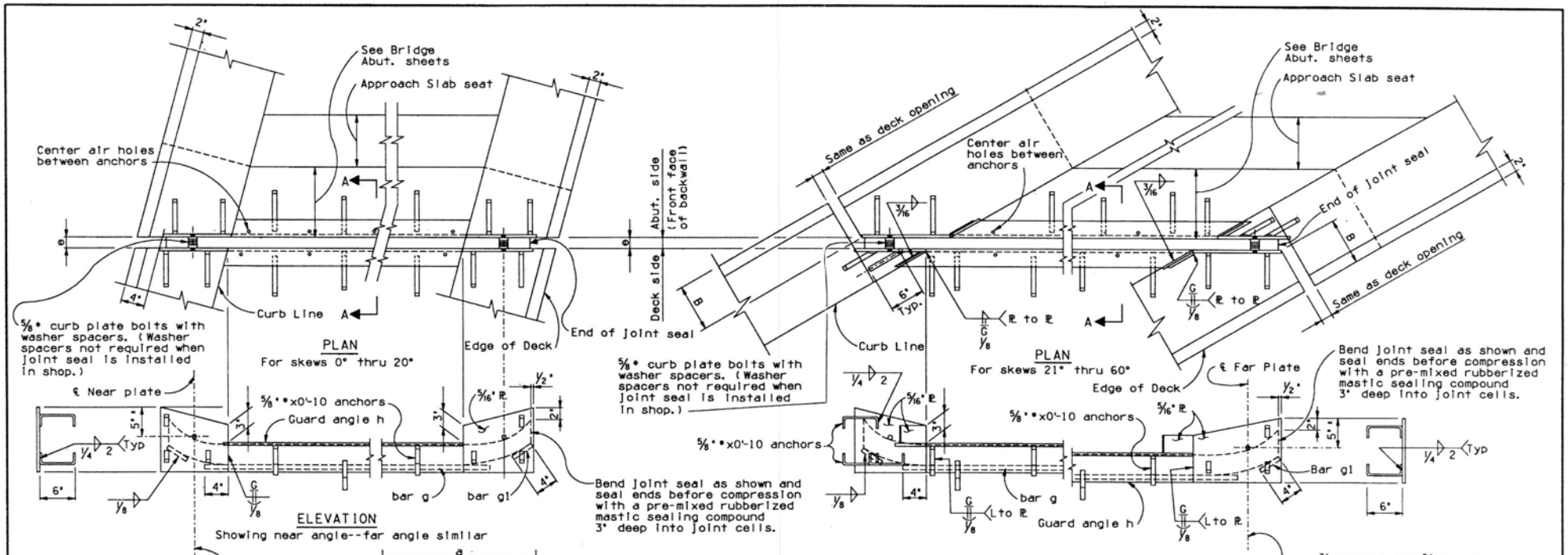

Skew Angle (Deg)	Dimension B (In.)
21° thru 33°	4
34° thru 36°	4 1/2
37° thru 40°	5
41° thru 43°	5 1/2
44° thru 47°	6
48° thru 51°	6 1/2
52° thru 54°	7
55° thru 57°	7 1/2
58° thru 60°	8

	Polychloroprene Cellular Joint Seal (Nominal Dimension)			
	2 x 2	3 x 3	4 x 4	5 x 5
a	6 1/2	7	7 1/2	8
b	1 3/8	1 5/8	1 1/4	1 1/4
c	3 3/4	4 3/8	5	5 1/2
d	L 2x2x1/4	L 3x3x3/8	L 3 1/2 x3 1/2 x3/8	L 4x4x3/8
e	1 1/4	1 7/8	2 1/2	3
f	2 1/2	3 5/8	4 5/8	5 5/8
g or gl	1/4 x3/4 bar	3/8 x3/4 bar	1/2 x3/4 bar	5/8 x3/4 bar
h	L 5x3x5/16	L 5x3x5/16	L 6x3 1/2 x5/16	L 6x3 1/2 x5/16
M.R.	3/4	1 3/8	1 3/4	2 1/2

M.R. = Movement rating. The difference between the smallest and the largest width of seal in place.

NOTES:

Guard angles and cellular seal shall be one piece, without splices, for lengths 60 feet or less. For over 60 feet, guard angles and cellular seal may be two pieces butted together, without splicing, at the crown or another location away from drainage.

Paint and painting shall conform to Std. Specs. of ADOT, current edition. One prime coat on all surfaces not in contact with concrete, two coats of paint on surfaces of guard angles, bar g, bar gl and 5/16" plates not in contact with joint seal or concrete.

Joint opening e shall be adjusted in the field for any variation of temperature above or below the mean temperature. See bridge sheets for the mean temperature and temperature correction.

Material - Structural Steel A.S.T.M. A36.

Erection angles and curb plate bolts shall not be removed until joint is fully encased in concrete (except curbs) and such concrete has attained its initial set.

Holes for curb plate bolts shall be plugged before placing curb concrete.

DESIGN APPROVED	ARIZONA DEPARTMENT OF TRANSPORTATION HIGHWAYS DIVISION STANDARD DRAWINGS	REVISION 7-88
APPROVED FOR DISTRIBUTION	COMPRESSION SEAL JOINT	STANDARD NO. B-24.20

CADD FILENAME= 2FA
VIEW NAME=

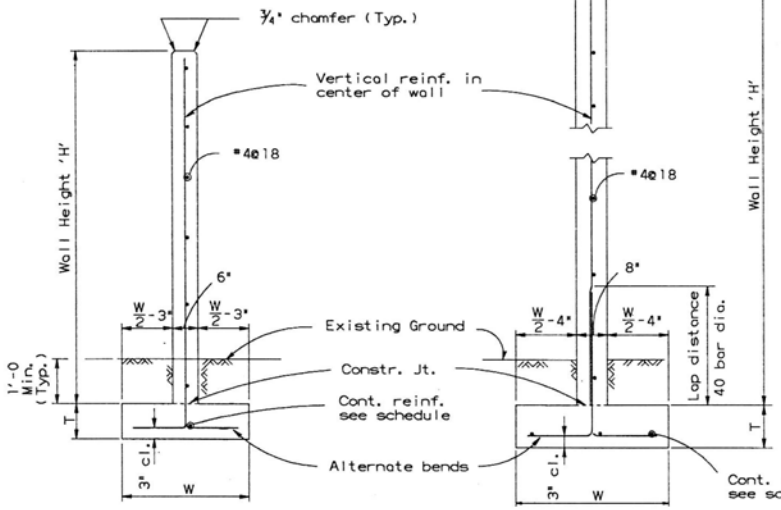

H <= 7'-0

H > 7'-0 & H <= 12'-0

TYPICAL WALL SECTIONS

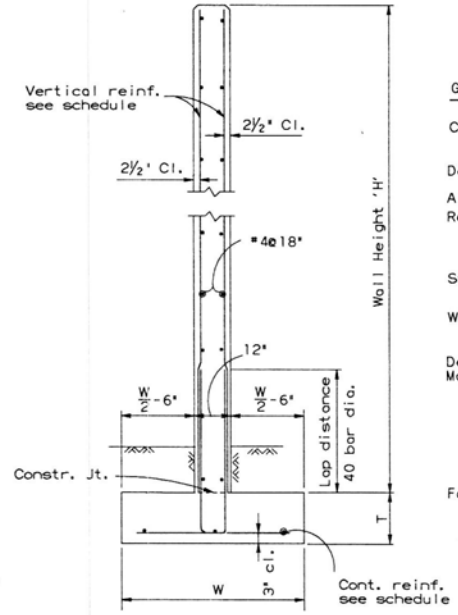

H > 12'-0

GENERAL NOTES

Construction - Arizona Department of Transportation Standard Specifications for Road and Bridge Construction, Edition of 1982 and 1985 Supplemental.

Design - AASHTO Standard Specifications for Highway Bridges. 1983 Edition and 1984 and 1985 Supplements.

All concrete shall be class 'S' unless noted otherwise.

Reinforcing Steel shall conform to ASTM Specification A615. Bar sizes #6 and smaller shall be designed as Grade 40 and furnished as Grade 40 or Grade 60.

Bar sizes #7 and larger shall be Grade 60.

Stresses
Concrete ---------- f'c = 2,500 psi.
Grade 40 Reinforcing Steel ------ fs = 20,000 psi.
Grade 60 Reinforcing Steel ------ fs = 24,000 psi.

Wind Load as per 1985 Uniform Building Code. Wind Velocity 80 MPH. Wind Pressure 18.4 psf for heights <= 12'-0 and 24.5 psf for heights > 12'-0.

Design requires a minimum allowable Soil Pressure of 1,500 psf.

Maximum allowable backfill variation shall be shown as below:

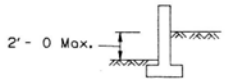

For wall treatment see Project Plans. Increase thickness of wall for any treatment with a depth greater than 1/2".

WALL SCHEDULE				
Wall Height 'H'	Ftg. Depth 'T'	Ftg. Width 'W'	Reinforcing: Wall & Dowel	Reinforcing: Cont. Ftg.
4'	10"	1'-10	#4@9"	1-#7
5'	10"	2'-0	#4@9"	1-#7
6'	10"	2'-2	#4@9"	1-#7
7'	10"	2'-4	#4@9"	1-#7
8'	10"	2'-8	#4@12"	3-#4
9'	10"	2'-10	#4@12"	3-#4
10'	1'-0	3'-0	#5@12"	3-#5
11'	1'-0	3'-4	#5@12"	3-#5
12'	1'-0	3'-6	#5@12"	3-#6
13'	1'-2	4'-2	#5@12"	3-#6
14'	1'-4	4'-6	#5@12"	3-#7

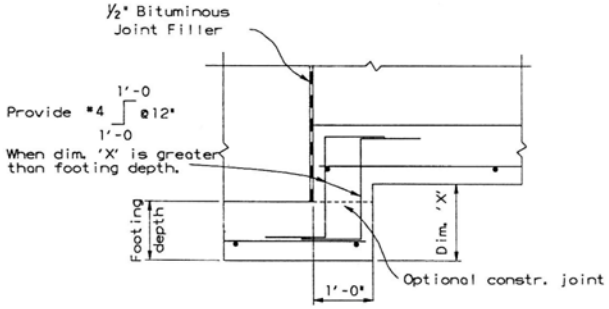

FOOTING STEP DETAIL

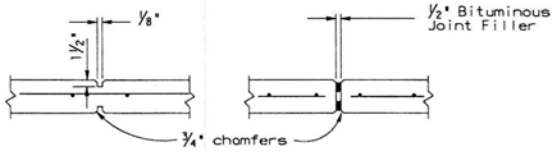

Weakened Planes
Max. Spacing 30'

Expansion Joint
Max. Spacing 90'

TYPICAL JOINT DETAILS
Detail drawn for 8" thick wall

	DESIGN APPROVED	ARIZONA DEPARTMENT OF TRANSPORTATION HIGHWAYS DIVISION STANDARD DRAWINGS	REVISION
	APPROVED FOR DISTRIBUTION 7-13-87	CONCRETE SOUND BARRIER WALLS	STANDARD NO. B-30.10

CADD FILENAME: ZFA 1=(51, 1383015.DGN
VIEW NAME: B300

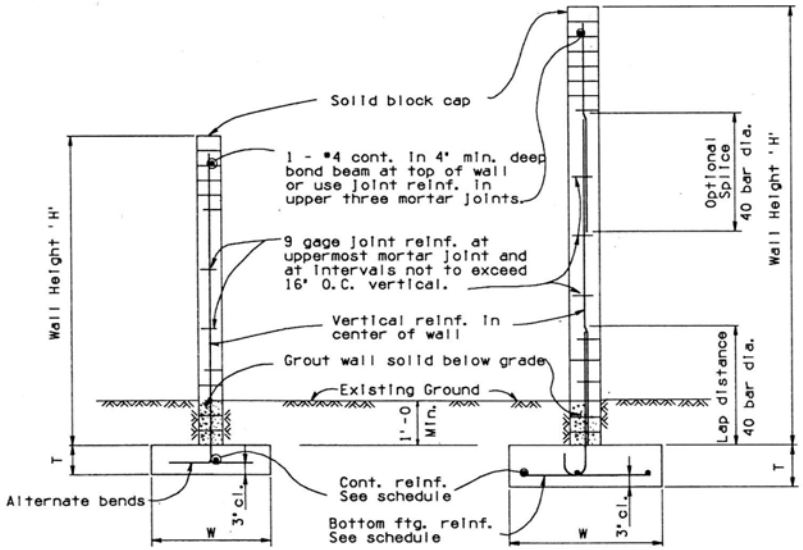

H <= 7'-0

H > 7'-0

TYPICAL WALL SECTION

WALL SCHEDULE						
Wall Height 'H'	Wall Thick *	Ftg. Depth 'T'	Ftg. Width 'W'	Reinforcing		
				Wall & Dowel	Bottom Ftg.	Cont. Ftg.
4'	6"	10"	1'-10	#5@32"	———	1-#6
5'	6"	10"	2'-0	#5@32"	———	1-#6
6'	6"	10"	2'-2	#5@32"	———	1-#6
7'	6"	1'-0	2'-4	#6@40"	———	1-#6
8'	8"	1'-0	2'-8	#6@40"	#5@40"	3-#4
9'	8"	1'-0	2'-10	#6@32"	#5@32"	3-#4
10'	8"	1'-0	3'-0	#6@24"	#5@24"	3-#5
11'	8"	1'-6	3'-4	#7@40"	#6@40"	3-#5
12'	8"	1'-6	3'-6	#7@24"	#6@32"	3-#6
13'	12"	1'-6	4'-2	#7@40"	#6@40"	3-#6
14'	12"	1'-6	4'-6	#7@24"	#6@32"	3-#7

* Nominal Dimension

GENERAL NOTES

Construction - Arizona Department of Transportation Standard Specifications for Road and Bridge Construction.
Design - AASHTO Standard Specifications for Highway Bridges. 1983 Edition and 1984 and 1985 Supplements.
All concrete shall be class 'S' unless noted otherwise.
Reinforcing Steel shall conform to ASTM Specification A615.
Bar sizes #6 and smaller shall be designed as Grade 40 and furnished as Grade 40 or Grade 60.
Bar sizes #7 and larger shall be Grade 60.
9 Gage Joint Reinforcing : Standard weight, Fy = 33,000 psi.
Masonry block, mortar, grout and wind load as per 1985 Uniform Building Code.

Stresses - Concrete ---------- f'c = 2,500 psi.
Masonry ---------- f'm = 1,350 psi.
Grade 40 Reinforcing Steel ------ fs = 20,000 psi.
Grade 60 Reinforcing Steel ------ fs = 24,000 psi.

Wind Load - Wind Velocity 80 MPH. Wind Pressure 18.4 psf for heights <= 12'-0 and 24.5 psf for heights > 12'-0.
Design requires a minimum allowable Soil Pressure of 1,500 psf.
Control Joints shall occur at intervals not to exceed 24'-0.
Maximum allowable backfill variation shall be shown as below:

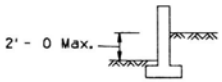

For wall treatment and type of block see Project Plans.
This drawing compatible with block types shown on Arizona Masonry Guild Standard #1080-80, #1090-80, #2000-80 and #2010-80.

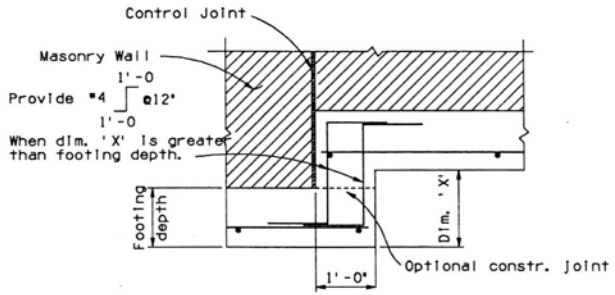

FOOTING STEP DETAIL

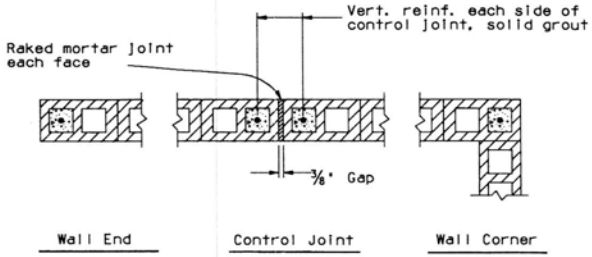

TYPICAL WALL DETAILS

	DESIGN APPROVED	ARIZONA DEPARTMENT OF TRANSPORTATION HIGHWAYS DIVISION STANDARD DRAWINGS	REVISION 7-88
	APPROVED FOR DISTRIBUTION	MASONRY SOUND BARRIER WALLS	STANDARD NO. B-30.20

CADD FILENAME= ZFA 1:*51,1*B3020.DGN
VIEW NAME= B3020